SITE PLAN REVIEW TECHNICAL ADVISORY COMMITTEE
PORTSMOUTH, NEW HAMPSHIRE

CONFERENCE ROOM A
CITY HALL, MUNICIPAL COMPLEX, 1 JUNKINS AVENUE

Members of the public also have the option to join the meeting over Zoom
*(See below for more details)**

2:00 PM **December 3, 2024**

AGENDA

I. APPROVAL OF MINUTES

A. Approval of minutes from November 5, 2024 Site Plan Review Technical Advisory Committee Meeting.

II. NEW BUISINESS

A. The request of **Jeffrey S. Nawrocki Revocable Trust (Owner),** for property located at **299 Hanover Street** requesting a parking Conditional Use Permit from Section 10.1112.14 to allow three parking spaces where 11 are required. Said property is located on Assessor Map 125 Lot 10 and lies within the Character District 4L-1 (CD4-L1) District. (LU-24-160)

B. The request of **One Market Square LLC (Owner),** for property located at **1 Congress Street**, **21 (*15*) Congress Street** requesting a Parking Conditional Use Permit from Section 10.1112.14 of the Zoning Ordinance to allow 21 parking spaces where 53 parking spaces are required; and Site Plan Approval to merge the lots of 1 Congress Street and 15 Congress Street for a mixed-use development with associated site improvements. Said property is located on Assessor Map 117 Lot 14 and Map 117 Lot 12 and lies within the Character District 4 (CD-4), Character District 5 (CD-5) and Historic and Downtown Overlay Districts. (LU-22-12)

C. The request of **Durgin Square LLC (Owner),** for property located at **1600 Woodbury Avenue** requesting amended Site Plan approval for the addition of EV charging stations in existing parking lot with associated equipment and transformer. Said property is located on Assessor Map 238 Lot 16 and lies within the Gateway Corridor (G1) District. (LU-24-182)

III. ADJOURNMENT

**Members of the public also have the option to join this meeting over Zoom, a unique meeting ID and password will be provided once you register. To register, click on the link below or copy and paste this into your web browser:*

https://us06web.zoom.us/webinar/register/WN_jWdZfAACQ7WxFBTVJf85TA

JSN
Associates, LLC
One Autumn Street
Portsmouth, NH 03801
(603)433-8639
www.jsneng.com

September 9, 2024

Narrative for CUP for Parking Analysis

The existing building is a 2-story office building with 1825 SF on first level and 2500 SF on second level. Building was built in 1998-99.
There are (3) on-site parking spaces in the carport under the southeast corner of building.
Existing parking requirement for both levels of office is 13 spaces.
Proposed parking requirement with apartments is 10 spaces, so requirement is reduced by three spaces.
On street parking is present for residents.
City parking garage is right behind building.
Two of three units are slightly over 750 SF so relief is being requested to allow (1) parking space per unit.

10.1112.141 Proposed number of spaces better satisfies parking requirement as required spaces are reduced. On street parking and nearby City garage satisfy all needs.
10.1112.142 This office has operated since 1999 with no issues regarding parking, which is evidence. The requirement is being reduced, and all residential units will have a space.
10.1112.143 Yes the parking will be sufficient. Many downtown residential units have zero parking. We have one space per unit.
10.1112.144 Everything is existing and working. There is no option for additional spaces.

ALTUS ENGINEERING

Civil
Site Planning
Environmental
Engineering

133 Court Street
Portsmouth, NH
03801-4413

PARKING DEMAND ANALYSIS
1 AUTUMN STREET
TAX MAP 125, LOT 110
PORTSMOUTH, NH

October 3, 2024

The Jeffrey S. Nawrocki Revocable Trust 2001 owns the property located at 1 Autumn Street. The 0.07-acre (per City GIS) downtown parcel has two office rental spaces with a 3-space covered parking area. The property was originally developed in the 1990's. The property owner is not proposing any exterior modifications to the site. They are proposing to convert the second office to residential use.

Altus prepared this Parking Demand Analysis based on the following:

Existing ±1,818 SF GFA of first floor office to remain as office space
Conversion of ±2,500 SF GFA of professional office space converted to 3 apartments
- 1 apartment under 750 SF
- 2 apartments over 750 SF

Parking spaces required for the City of Portsmouth Zoning Ordinance Section 10.1110 Off Street Parking

Apartment between 500 and 750 SF	1.0 spaces per unit
Apartment greater than 750 SF	1.3 spaces per unit
Professional offices	1 space per 350 SF GFA

Existing Parking Stalls required	
Professional office 4,318 SF GFA/350 SF	12.3 spaces
	13 spaces required

Proposed Parking Stalls required	
1 Apartment (under 750 SF)	1.0 space
2 Apartments (over 750 SF)	2.6 spaces
Professional office 1,818 SF GFA/350 SF	5.2 spaces
	8.8 spaces
	9 spaces required [1]

[1] See Section 10.1112.22: "Where the computation of required off-street parking spaces results in a fractional number, the computation shall be rounded up to the next whole number."

Based on the City Ordinance alone, the parking space required for Tax Map 125, Lot 110 is reduced from 13 spaces to 9 spaces. There are three existing covered parking stalls on the parcel.

There are numerous resident only public parking stalls throughout the neighborhood. There are also two public parking facilities within 300-feet and 500-feet (walking distance) to the subject property, the Foundry Parking garage and the Bridge Street parking lot.

To determine the expected parking that will be generated by the existing/proposed uses, Altus normally utilizes the ITE Parking Generation Manual, 5th Edition. It is our opinion that the setting/location falls under the General Urban/Suburban category. However, the manual has limitations when it comes to small traffic generators and unique end users like a 3-unit apartment building. Additionally, ITE states that "it contains information that can also easily be misinterpreted without sound professional judgement…"

As such, a commonsense approach to developing the parking needs to be utilized. Since Professional Offices are generally closed on weekend or have limited use, the assessment was completed using only weekday data.

Land Use Code 712 Small Office Building
Peak Period Parking Demand on a weekday 10:00 AM to 5:00 PM
Average rate 2.56 vehicles per 1,000 SF GFA

Land Use Code Residential 220 Multifamily housing (Low-Rise)
Peak Period Parking Demand on a weekday 11:00 PM to 6:00 AM [2]
Average rate 1.25 spaces per dwelling unit

Existing Parking Demand

4,318 SF GFA x 2.56 vehicles per 1,000 SF GFA =	**11.1 space demand**

Proposed Parking Demand

1,818 SF GFA x 2.56 vehicles per 1,000 SF GFA =	4.7 space demand
3 dwelling units x 1.25 spaces per dwelling unit =	3.8 space demand
Proposed total	**8.5 space demand**

Based on ITE, it is reasonable to believe that the parking demand will be reduced by 2.6 spaces. We further assume that several employees will either walk to work, use bicycles or mopeds.

[2] Residential peak periods occur in the evening and does not coincide with Professional Office where the peak occurs during the daytime. Conservative assumption that Residential Peak and Professional Peak occurs simultaneously.

With the approval of this project, the parking demand will decrease. Thus, it is Altus' opinion that the existing building can function adequately without adverse impacts to the neighborhood with the conversion of the second-floor office space to three residential dwelling units.

Wde/5624 parking demand analysis.docx

City of Portsmouth, NH

Property

Zoom To | Share | Print | Property Quick Search

Search | Selection | Themes | Markup

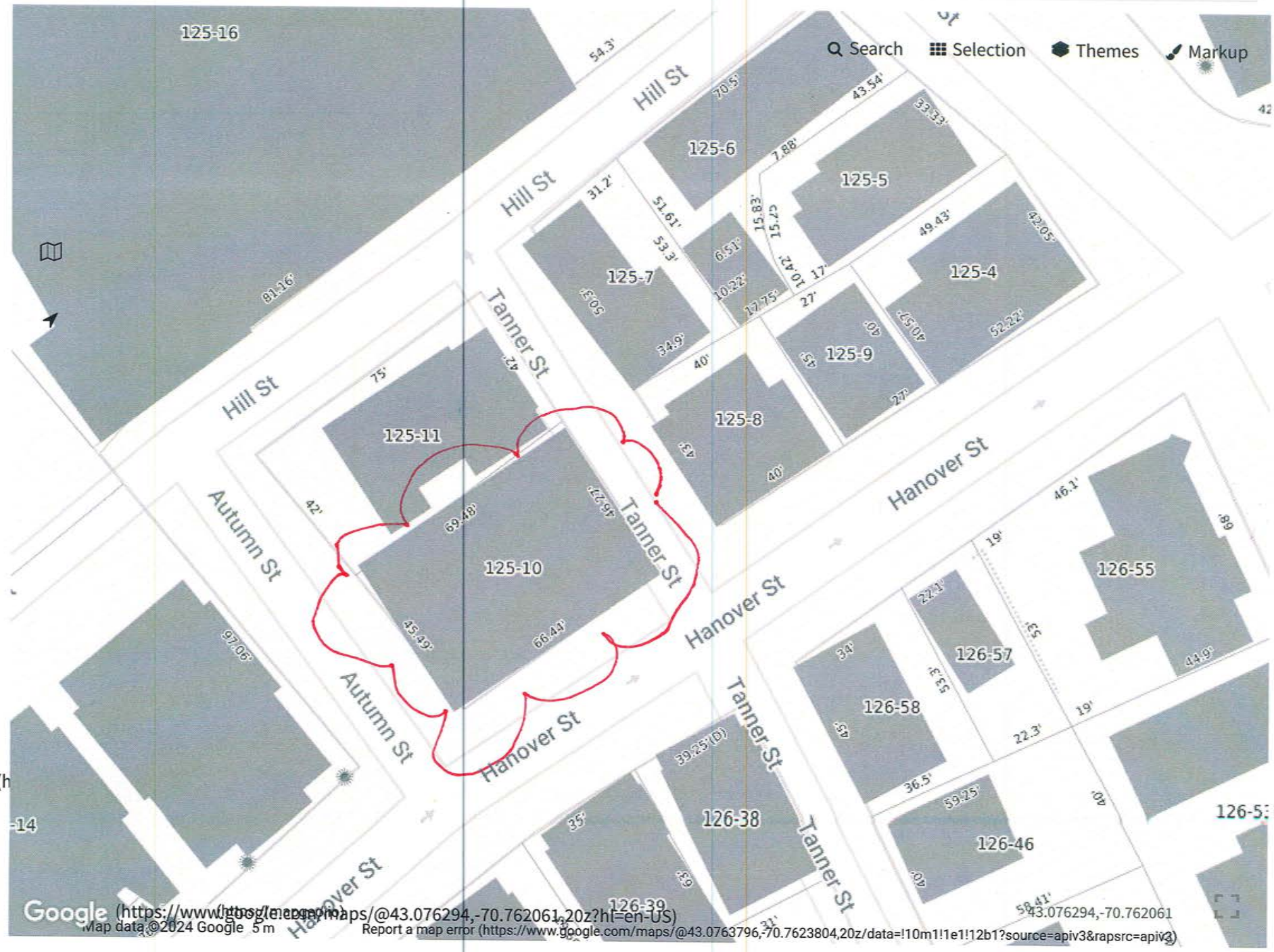

Google (https://www.google.com/maps) Map data ©2024 Google 5 m (https://www.google.com/maps/@43.076294,-70.762061,20z?hl=en-US) Report a map error (https://www.google.com/maps/@43.0763796,-70.7623804,20z/data=!10m1!1e1!12b1?source=apiv3&rapsrc=apiv3) 43.076294,-70.762061

263
285
299 Hanover St
136
54
306
314
AUTUMN ST
HANOVER ST

AUTUMN ST

HANOVER ST

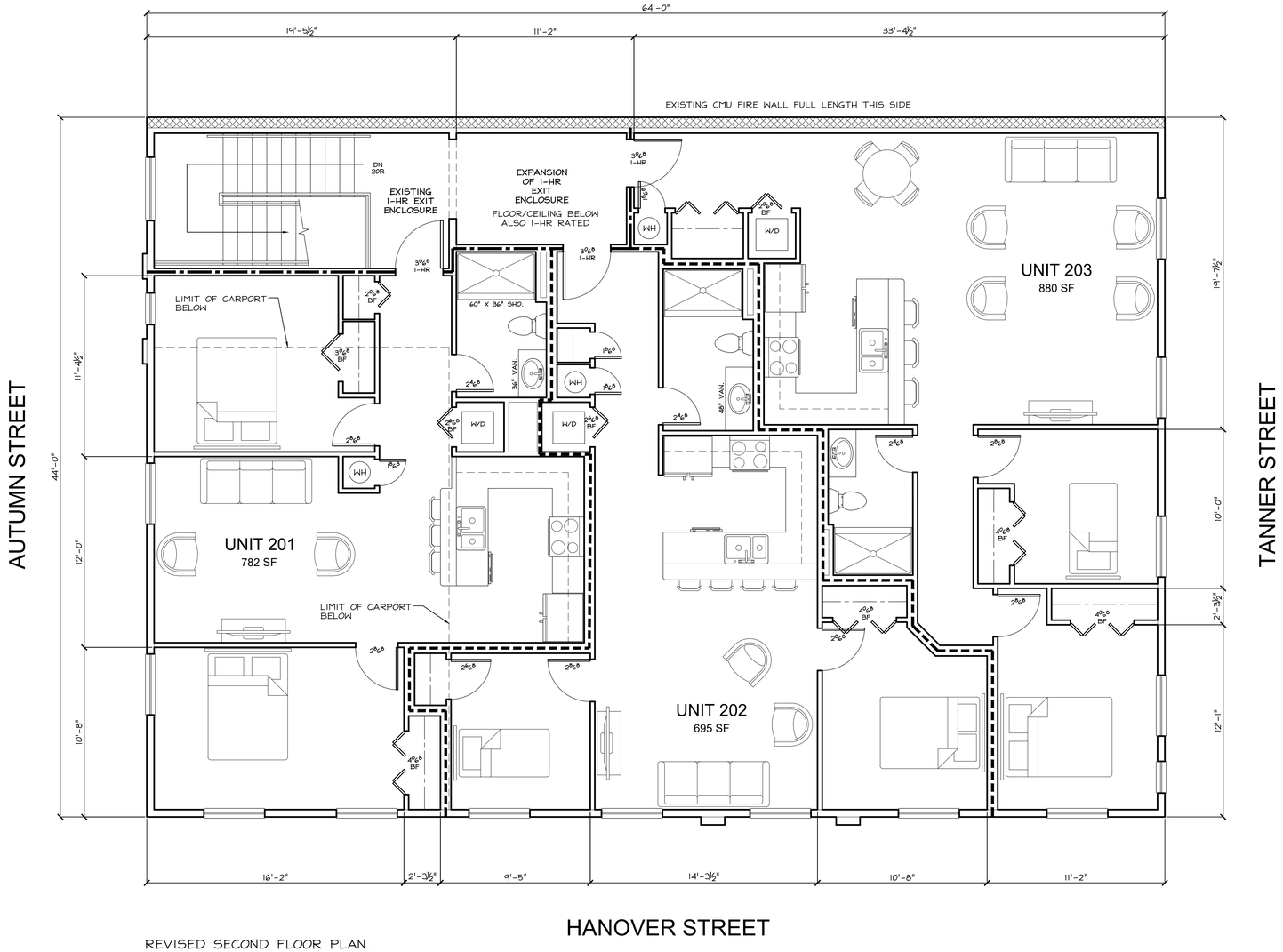

REVISED SECOND FLOOR PLAN
SCALE: 1/4" = 1'-0"

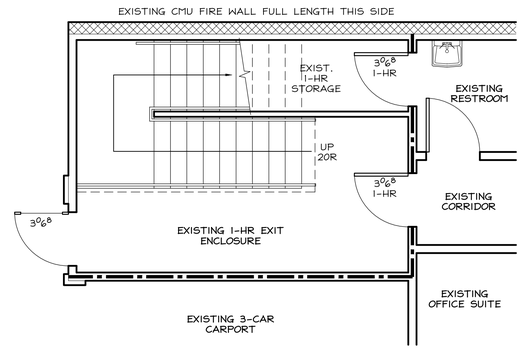

PARTIAL EXISTING FIRST FLOOR PLAN
SCALE: 1/4" = 1'-0"

JSN Associates, LLC
Consulting Structural Engineers
One Autumn Street
Portsmouth, NH 03801
Phone: (603) 433 - 8639
www.jsneng.com

Client:
Jeff Nawrocki

Conversion from Office to Apartments
1 Autumn Street
Portsmouth, NH

—Preliminary—
Not for Construction
09-05-24

Date:	-
Scale:	As Noted
Design By:	RB
Approved By:	-

Revisions

Floor Plans

A1.0

Project No: 24-XXXX

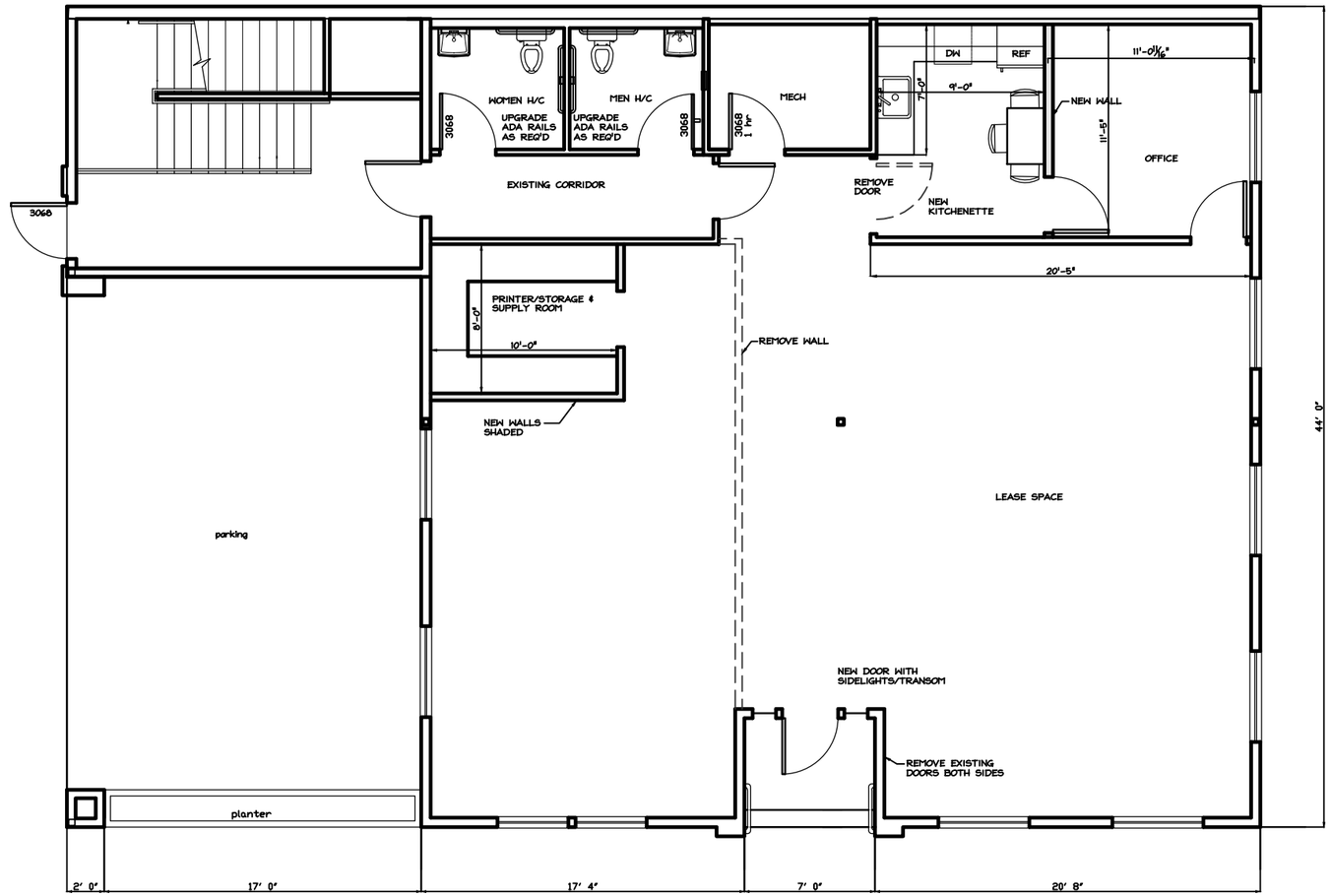

1 A1 FIRST FLOOR PLAN
1/4"=1'

PROJECT INCLUDES NEW FINISHES AND PAINT IN ALL APPLICABLE ROOMS OF THIS UNIT

JSN Associates, LLC
One Autumn Street
Portsmouth, NH 03801
(603) 433-8639
www.jsneng.com

Renovation

299 Hanover Street
Portsmouth, NH

Date:	01/07/20
Scale:	As Noted
Project No:	
	A1.0

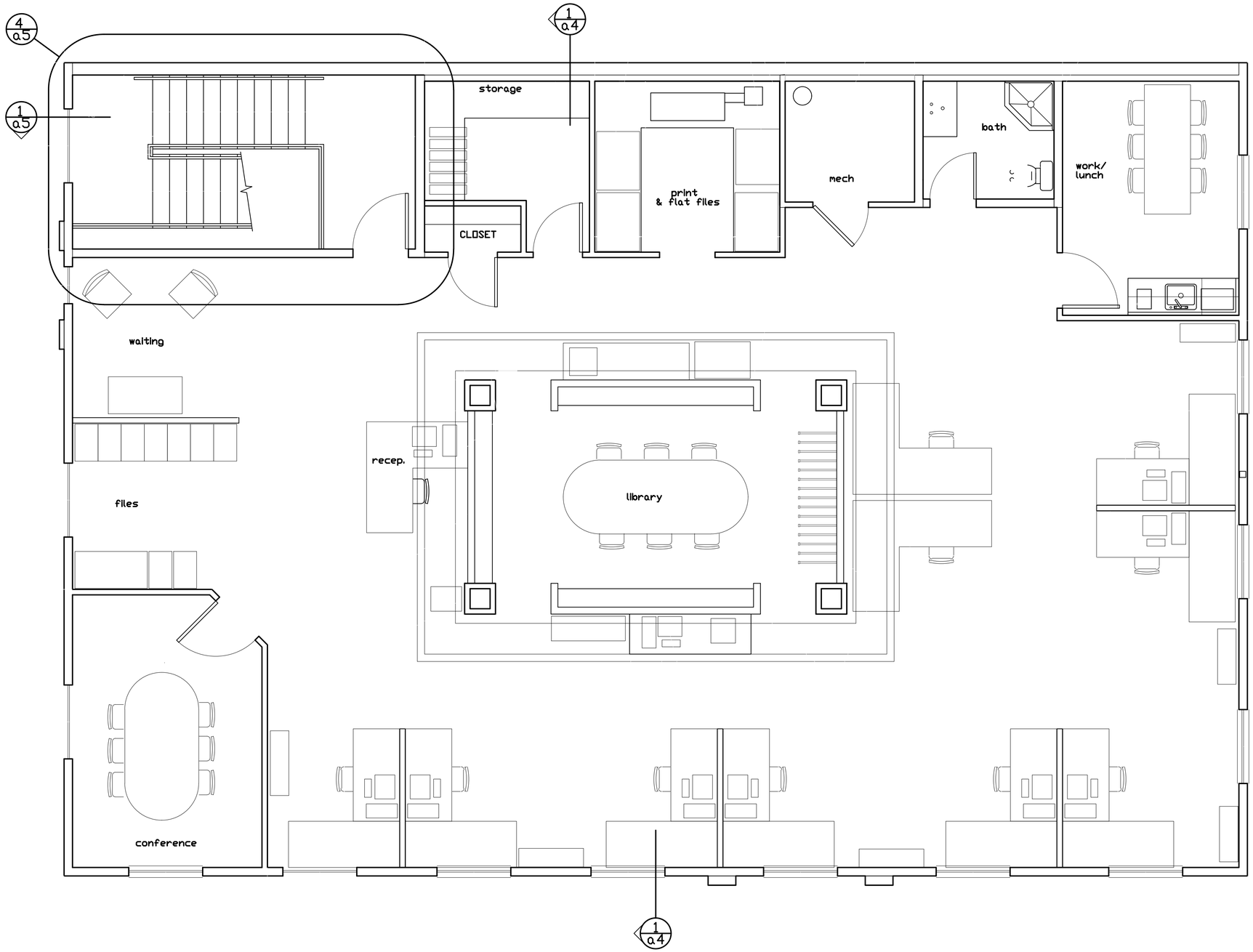

1 a2 second floor plan

1/4"=1'

This location for dumpster
299 Hanover St
Google Earth
© 2019 Google

ALTUS ENGINEERING

Civil
Site Planning
Environmental
Engineering

133 Court Street
Portsmouth, NH
03801-4413

PARKING DEMAND ANALYSIS
1 AUTUMN STREET
TAX MAP 125, LOT 110
PORTSMOUTH, NH

November 21, 2024

The Jeffrey S. Nawrocki Revocable Trust 2001 owns the property located at 1 Autumn Street. The 0.07-acre (per City GIS) downtown parcel has two office rental spaces with a 3-space covered parking area. The property was originally developed in the 1990's. The property owner is not proposing any exterior modifications to the site. They are proposing to convert the second office to residential use.

Altus prepared this Parking Demand Analysis based on the following:

Existing $\pm 2{,}500$ SF GFA of second floor office to remain as office space
Conversion of $\pm 1{,}818$ SF GFA of professional office space converted to 2 apartments
2 apartments over 750 SF

Parking spaces required for the City of Portsmouth Zoning Ordinance Section 10.1110 Off Street Parking

Apartment greater than 750 SF	1.3 spaces per unit
Professional offices	1 space per 350 SF GFA

Existing Parking Stalls required	
Professional office 4,318 SF GFA/350 SF	12.3 spaces
	13 spaces required

Proposed Parking Stalls required	
2 Apartments (over 750 SF)	2.6 spaces
Professional office 2,500 SF GFA/350 SF	7.1 spaces
	9.7 spaces
	10 spaces required [1]

[1] See Section 10.1112.22: "Where the computation of required off-street parking spaces results in a fractional number, the computation shall be rounded up to the next whole number."
[2] Residential peak periods occur in the evening and does not coincide with Professional Office where the peak occurs during the daytime. Conservative assumption that Residential Peak and Professional Peak occurs simultaneously.

Based on the City Ordinance alone, the parking spaces required for Tax Map 125, Lot 110 is reduced from 13 spaces to 10 spaces. There are three existing covered parking stalls on the parcel.

There are numerous residential only public parking stalls throughout the neighborhood. There are also two public parking facilities within 300-feet and 500-feet (walking distance) to the subject property, the Foundry Parking garage and the Bridge Street parking lot.

To determine the expected parking that will be generated by the existing/proposed uses, Altus normally utilizes the ITE Parking Generation Manual, 6th Edition. It is our opinion that the setting/location falls under the General Urban/Suburban category. However, the manual has limitations when it comes to small traffic generators and unique end users like a 2-unit apartment building. Additionally, ITE states that "it contains information that can also easily be misinterpreted without sound professional judgement…"

As such, a commonsense approach to developing the parking needs to be utilized. Since Professional Offices are generally closed on weekend or have limited use, the assessment was completed using only weekday data.

Land Use Code 712 Small Office Building
Peak Period Parking Demand on a weekday
Average rate 1.85 vehicles per 1,000 SF GFA

Land Use Code Residential 220 Multifamily housing (Low-Rise)
Peak Period Parking Demand on a weekday [2]
Average rate 1.27 spaces per dwelling unit

Existing Parking Demand

4,318 SF GFA x 1.85 vehicles per 1,000 SF GFA =	**7.9 space demand**

Proposed Parking Demand

2,500 SF GFA x 1.85 vehicles per 1,000 SF GFA =	4.6 space demand
2 dwelling units x 1.27 spaces per dwelling unit =	2.5 space demand
Proposed total	**7.1 space demand**

Based on ITE, it is reasonable to believe that the parking demand will be reduced by 0.8 spaces. We further assume that several employees will either walk to work, use bicycles or mopeds.

With the approval of this project, the parking demand will decrease. Thus, it is Altus' opinion that the existing building can function adequately without adverse impacts to the neighborhood with the conversion of the second-floor office space to three residential dwelling units.

Wde/5624 parking demand analysis rev 1.docx

18 November 2024

Peter Stith, TAC Committee Chair
City of Portsmouth
1 Junkins Avenue
Portsmouth, NH 03801

RE: Request for Site Plan Review at 1 Congress Street and 15 Congress Street, Proposed Residential and Mixed-Use Commercial Development

Dear Mr. Stith and Technical Advisory Committee Members:

On behalf of One Market Square, LLC., we are pleased to submit the attached completed application for **Site Plan Approval** for the above-mentioned project and request that we be placed on the agenda for your **December 3, 2024,** Technical Advisory Committee (TAC) Meeting. The property is shown on the City of Portsmouth Assessors Map 117 as Lots 12 and 14. The project is located at 1-15 Congress Street, with frontage on High Street and Fleet Street, and is within the City of Portsmouth Character District 4 (CD4) and Character District 5 (CD5) Zoning Districts. The site is currently mostly developed with existing buildings and a surface parking lot. The proposal presented herein involves the construction of structure additions and the renovation of existing buildings

Project Overview

The project is a combination of the previously approved 1 Congress Street project, which is on Tax Map 117 – Lot 14, and is in the online portal as Land Use Application (LU) – 22-12, hereinafter referred to as "One Market Square", with the property located at 15 Congress Street (Tax Map 117 – Lot 12), hereinafter referred to as "JJ Newberry". The proposal is to merge the lots and re-develop the combined lot according to the attached site plans. On the merged lot, we are requesting a Conditional Use Permit in accordance with Section 10.241.23(a) of the Zoning Ordinance to allow a building footprint of 36,000 +/- square feet on the merged parcel. The project also requests a Parking Conditional Use Permit as provided for in Section 10.1112.14 of the Zoning Ordinance for providing 21 parking spaces where 53 parking spaces are required.

Property Line Adjustment

Prior to merging the lots, the applicant is proposing, and submits herewith, a Lot Line Adjustment with the City of Portsmouth affecting certain portions of Haven Court. The Standard Boundary Survey plan shows the existing Map 117, Lot 14 parcel, and the Lot Line Adjustment Plan details the proposed property relocation with the City of Portsmouth. The Planning Board will be asked to approve the land swap as a part of the project approvals.

200 Griffin Rd., Unit 14, Portsmouth, NH 03801
T: 603.430.9282 | HALEYWARD.COM

That application will convey title to an 808 square foot portion of Haven Court from the City of Portsmouth to One Market Square, LLC and simultaneously convey title to land owned by One Market Square, LLC, to the City of Portsmouth in the defined area abutting the High Hanover Parking Garage. That 808 square feet was previously a part of the JJ Newberry parcel, prior to the December 05, 2006, conveyance. The land being conveyed to the city will cure an existing encroachment of the High Hanover Parking Garage onto land owned by One Market Square, LLC. This Lot Line Adjustment was referred to the Planning Board by the City Council on August 18, 2024, and the Planning Board made a recommendation to proceed with the proposed boundary change. The City Council is ready to take the next step in this process at their November 18, 2024, Council Meeting. Please find the City Managers Comment Sheet for the Council meeting attached to this submission.

Existing Site Approvals

The One Market Square project was approved by the Planning Board on February 16, 2023, and subsequently granted an approval extension to February 16, 2025. One Market Square was approved by the Historic District Commission on August 3, 2022, and subsequently granted extensions to August 2, 2025. The project includes the renovation of existing commercial buildings located at 1 and 3 Congress Street, demolition to portions of existing buildings, and new construction of a 3-story building with Attic Hip Top Mansard Roof to the rear of the existing buildings and site improvements. The area behind the existing building is currently a surface parking lot. One level of vehicular parking will be provided underground and accessed by a car elevator.

The 1 Congress Street portion of the project will remain the same as in the 2023 approval with the following changes:

- The proposed building will be extended and attached to the existing JJ Newberry building.
- A portion of the second floor of the One Market Square project will change its proposed use from office to residential.

Site Plan Update – JJ Newberry

The JJ Newberry project consists of rehabilitation and adaptive reuse of the existing structure(s) with minor accessory additions. New projecting storefronts with recessed entrance stoops are proposed along the north elevation of the property to create a retail experience in a re-imaged, pedestrian friendly corridor connecting High Street and Fleet Street. This area, previously known as Haven Court, is proposed to be re-named Newberry Way. The proposed naming has been sent to the Portsmouth Department of Public Works (DPW) for approval. The surface elevation of the corridor will be lowered to create an ADA compliant pedestrian space open to the public, extending the pedestrian experience from the McIntyre Building along Commercial Alley, Ladd Street, and Newberry Way to Fleet Street, with an enhance pedestrian experience on High Street. One Market Square, LLC is committed to the previously stated commitment to include renovating Ladd Street and High Street as a part of the project.

200 Griffin Rd., Unit 14, Portsmouth, NH 03801
T: 603.430.9282 | HALEYWARD.COM

The upper floor uses in the JJ Newberry Building will change from office to residential. The first-floor space along Congress Street will remain retail and restaurant use. The first-floor space along Fleet Street will be changed from office to retail and restaurant uses. An egress stair tower, accessible elevator, and main entrance for the upper floors of residential use will be accessed from Newberry Way, in the vicinity of the One Market Square building connection with the JJ Newberry building. A rooftop penthouse and secondary egress stairs are proposed on the existing roof. The existing flat roof will accommodate a roof deck with extensive green scape plantings for residential use, solar PV array, and mechanical equipment. The result is a single building from Congress Street, along High Street and Newberry Way to Fleet Street. This single building will have a footprint of 36,000 +/- square feet. Since the footprint exceeds the maximum footprint allowed in the Zone (CD 4 / CD5), we are requesting that the Planning Board grant a Conditional Use Permit for the expanded footprint, as permitted by Section 10.241.23(a) of the Zoning Ordinance.

The existing brick facade on Congress Street will be repaired and restored according to historic photographs. The existing brick facade on Fleet Street will be repaired, with proposed awnings at storefront windows and entrances. Along the existing southerly 10-foot-wide alley off Fleet Street, the project will cut vertical entrances, windows and recessed balconies in the brick façade to allow for retail entrances with upper floor covered recessed balconies for residential tenants. The JJ Newberry project has been reviewed during a work session with the HDC and at a Public Hearing on November 6, 2024, the project was approved.

Site Plan Submission

The submission requirements of the City of Portsmouth Site Plan Regulations have been reviewed. The information supplied herein is intended to assist in a determination of the project's compliance.

Plans are drawn in accordance with scale and size requirements, with dates, titles, north orientation, Map and Lot, Zoning, revision blocks, and Legends. The proposed uses and Square footage of use are shown on the Architectural plans. The professional's seals with license numbers are on the submitted plans. The Existing Conditions plan shows the site topography, building location with floor elevation, feature locations, and driveway access / egress and current parking configuration. Available utility information is shown. Subsequent plans show the proposed development with the associated site improvements and construction details.

Site Zoning

The applicant desires to repurpose the upper floor of JJ Newberry into high density "Co-Living" residential apartments. The irregular shape of the historic JJ Newberry structure is better suited for Co-Living with bedrooms *sharing common* living, kitchen, and bathrooms. This allows bedrooms to have windows, and to use internal windowless areas for common living use. In the applicants Preliminary Conceptual Consultation and Design Review application to the Planning Board (LUPD 24-6), a document entitled "Zoning Ordinance Change to Allow Co-Living Use" provided an abstract, history

200 Griffin Rd., Unit 14, Portsmouth, NH 03801
T: 603.430.9282 | HALEYWARD.COM

and proposed zoning change to allow for a Co-Living Use. The applicant requests that the Planning Board create a Co-Living use zone.

The path to a change in the Portsmouth Ordinance is ongoing, and Co-Living use for the upper floors of the JJ Newberry building can only occur with the zoning change. The design presented is in conformance with permitted residential uses in the Zoning Ordinance. The existing size and configuration of the JJ Newberry Building does not, unfortunately, lend itself to the creation of livable micro units. While that is a preferred option under existing zoning, such a conversion is not practically feasible because approximately 50% of the micro apartments would have no windows, due to the irregular shape of the building. Therefore, the conversion presented for approval consists of the creation of 19 dwelling units on those upper floors, consisting of a mix of two-, three-, and four-bedroom units.

The Project Site Zoning Plan C102 details information regarding the proposed uses, including unit size(s) and bedroom counts. Included is a calculation of the required parking under the Portsmouth Zoning Ordinance (PZO). The plan shows the existing and proposed Impervious Surface Areas on the combined lot. The lots are pre-existing non-conforming. The proposed project reduces the impervious surface totals for the project. The proposed building uses, all conforming, are listed on this sheet. Information regarding the proposed Conditional Use Permits (CUP) required for the project are listed. The Ordinance Building Height and Development Standards Regulations are shown for ease of reference. No variances are required for the project.

Vehicular and Pedestrian Circulation

The application package includes a Technical Memorandum prepared by Greenman-Pedersen, Inc. (GPI), the project Traffic Consultant, calculating site Trip Generation and Institute of Traffic Engineers (ITE) Parking Calculations. The Memorandum details the changes in traffic generation due to the project. There is a minor increase to Saturday mid-day traffic, which is not expected to impact the roadway network. Parking calculations from the ITE Standards are included, and as noted there are variations expected within downtown dense urban areas. The plans show the removal of the curbed sections of High Street and Ladd Streets to a single grade with tactile and color surface changes to reflect the pedestrian and vehicular partitioning of the right-of-way. This is similar to the re-construction work performed on Chestnut Street at the Portsmouth Music Hall. As shown on the 1 Congress approval, the parking spaces on High Street have been eliminated to allow the sidewalks to have the proper width. The Portsmouth Fire department also determined that the narrow width existing on High and Ladd Streets, with the curbed sections, presented an issue with deployment of fire apparatus.

The proposed Newberry Way pedestrian connection is supported by the Master Plan as part of an overall connection running from McIntyre and potentially to Vaughan Mall. The Site Context Map shows the connections. Significant improvements are proposed for Newberry Way including changing the grade, installing underground utilities, hardscape impervious and porous pavers, catenary lights,

200 Griffin Rd., Unit 14, Portsmouth, NH 03801
T: 603.430.9282 | HALEYWARD.COM

and landscaping. Utilizing the abutting property located at 175 Fleet Street (known as Gilley's), which is now under a purchase agreement by the developer, the transformer previously shown in the revised Newberry Way will be relocated out of the pedestrian corridor. The design plans include the proposed improvements on Ladd Street & High Street, which the applicant is willing to fund at their sole cost. The applicant finalized the attached Memorandum of Understanding with the Portsmouth City Council as a part of the 1 Congress Street site plan approval. The memorandum stipulates that One Congress, LLC will pay the entire cost of design and construction of the improvements, thereby not requiring the City of Portsmouth to pay the costs for the proposed improvements to the city's downtown infrastructure shown in this application. Please note the following in regard to the signed Memorandum of Understanding:

- The plans that were contemplated and approved show the removal of existing parking spaces on High Street. This is a key component of the proposed street improvement design. The developer is of the understanding that the Memorandum of Understanding allows that plan to move forward.
- Part I Developers Obligations A.4 and A.5 regarding pedestrian access to the High Hanover Parking Garage and the stairway connection would be revised due to the change of proposed grading on Newberry Way, as the contemplated stairway is being replaced by a continuous grade. The design team will work with the city to identify if alternative pedestrian access to the parking garage is achievable in the revised design.
- Part I Developers Obligations B.7 regarding permissions for construction on the Wenberry parcel has been met by the developers acquisition of the property in a binding purchase and sales agreement.
- Part II City's Obligations 2, the developer is of the understanding that the city will procure a third-party study of the feasibility of a shared trash and recycling area within the High Hanover Garage. The developer is willing to pay for the capital improvements, management and long-term maintenance of the trash and recycling room.
- Part II City's Obligations 3, the developer is of the understanding that the city will procure a third-party study by an experienced land use firm and Parking/traffic engineer for the three entrances to the High Hanover Garage so the City may consider any changes to those entrances. The applicant favors and recommends the city close the High Street entrance to the High Hanover Garage to reduce traffic driving through Market Square.

The City Council, by vote of August 21, 2023, expressly delegated authority to the City Manager to negotiate, convey and/or accept land interests, negotiate, execute and record as necessary any and all easements, licenses, joint use agreements or other documents reasonably necessary for the purposes of the Memorandum of Understanding. Currently the process is in place, with Addendum 1 (also attached) under consideration. The Revision to Part I.A.2, the 10-foot maintenance easement along the High Hanover Parking Garage, has been stated as Note 10 to a revised Lot Line Relocation Plan.

200 Griffin Rd., Unit 14, Portsmouth, NH 03801
T: 603.430.9282 | HALEYWARD.COM

Screening and Landscaping

The site currently is only landscaped at the existing surface parking lot at 1 Congress Street, rear. The proposed pedestrian corridor improvements expand the landscaping from the High Street / Newberry Way intersection along the pedestrian corridor all the way to Fleet Street. Landscaping is detailed on Landscape Plans L01 – L05.

Water and Sewage Systems

The site is served by municipal water and sewer. The development proposes improvements (upgrades) to the water and sewer infrastructure on High Street and Ladd Streets. The utility demand generated by the additions and renovations are not expected to exceed the capacity of the existing updated infrastructure. These and other utilities are detailed on Utility and Street Profile Plans C014 – C105 and C201 – C203.

Stormwater Management

The site drainage patterns are detailed and discussed in the attached Stormwater Management Plan. The proposed development has been designed to match the pre-development drainage patterns to the greatest extent feasible. With the design of the roof drain filter the post-development runoff is treated sufficiently. Erosion and sediment control practices will be implemented for both the temporary condition during construction and for final stabilization after construction. Therefore, there are no negative impacts to downstream receptors or adjacent properties anticipated as a result of this project.

Site Lighting

The re-development will introduce adequate lighting of the street and pedestrian corridors to provide a welcoming and safe pedestrian and vehicular experience, contrary to the existing condition. The proposal is to provide catenary mounted lighting located at a suitable height above grade. The lighting intensities are detailed on the Lighting Plans C106 and C107, and the proposed fixtures are included in the Supplemental Material submission.

Site Signage and Artwork

The site is currently served by existing building mounted signage, which will be re-worked as needed. New signage will be permitted through the signage permit process. The project will work to retain and display some of the JJ Newbery historic signage. In addition, there will be some added building mounted artwork to provide additional interest and pedestrian engagement.

Site Utilities and Solid Waste

Site utilities include natural gas, underground electric and communications services. The existing services will not be adjusted and will remain operational as is, unless changes are required, which would be limited to existing corridors / conduits. The developer will assist Eversource and the city in providing the space on Newberry Way to install underground electrical primary lines that will come from Fleet Street and go the transformers and switchgear at the High Ladd Street intersection, and

200 Griffin Rd., Unit 14, Portsmouth, NH 03801
T: 603.430.9282 | HALEYWARD.COM

create a redundant loop for additional reliability. High Pressure Natural Gas will also be extended on Newberry way to the site and beyond the subject property (by others) to and in accordance with utility company desires.

Solid Waste will be relocated to space within the High Hanover garage, subject to city DPW review and authorization from the City Council. Currently there is a dumpster in the pedestrian corridor that needs to be removed to allow the desired public use and enjoyment of the updated corridor. The applicant is agreeable to fund the improvements to the space within the High Hanover garage to create a trash room, and provide for the ongoing operation and maintenance of the facility, subject to city approval and licensing. Regarding the trash room, the developer envisions access for trash haulers to pick up in High Street by having trained employes move with electric hand carts 8-yard trash dumpsters and 8-yard recycling dumpsters into a pickup area near the High Street entrance to the parking garage. This is the same way trash is taken out of the 60 Penhallow property and the Port Walk parking garage, and it works well. The grades on Newberry Way will be too high to have any street level access to the trash disposal in the garage directly from Newberry Way. The developer will fabricate stainless-steel trash/recycling shoots in the face of the garage on the Newberry Way side for trash and recycling drop off into the bins within the city space. The final design concept will be done by a professional firm with the requisite expertise, or otherwise designed by mutual agreement. There could be card readers in the public space to provide access to the trash area or to open the trash shoots, similar to what is in place at the 60 Penhallow building,.

The following plans are included in our submission:

- Cover Sheet: This shows the Development Team, Legend, Site Location, and Site Zoning.
- 1 Congress Boundary Plan: This plan shows the existing 1 Congress Street property boundaries.
- 1 Congress Lot Line Adjustment Plan: This plan shows the proposed 1 Congress Street property boundaries after a Lot Line Relocation with the City of Portsmouth.
- 15 Congress Street Standard Boundary Survey and Existing Conditions Plan - Development Parcel: This plan shows the 15 Congress Street Boundary and the existing site development area conditions in detail.
- Existing Conditions Orthophoto Plan: This plan shows the site conditions from an aerial drone photograph prospective.
- Demolition Plan C101: This plan shows portions of the existing buildings and other site features which will be removed.
- Project Site Zoning C102: This plan shows information about site zoning.
- Proposed Site Plan C103: This plan shows the site development and proposed building placement.
- Grading and Drainage Plan C104: This plan shows project site grading and drainage.
- Utility Plan C105: This plan shows proposed utilities.
- Lighting Plans C106 – 107: Lighting layout and intensities.

200 Griffin Rd., Unit 14, Portsmouth, NH 03801
T: 603.430.9282 | HALEYWARD.COM

- Proposed Plan and Profile Newberry Way C201: This plan shows the proposed profile of Newberry Way.
- Proposed Plan and Profile High Street C202: This plan shows the proposed profile of High Street.
- Proposed Plan and Profile Ladd Street C203: This plan shows the proposed profile of Ladd Street.
- Architectural Plans PBN A0 – A9: Foor Plans, Roof Plans, Elevations and 3D Views of the proposed building (s).
- Landscape Plans L01 – L05: These plans show proposed Newberry Way, High Street, and Ladd Street proposed surface features.
- Detail Sheets C501 to C505: These plans show the associated construction details.

Also attached to this submission is additional material to aid in the review of the application.

We look forward to Technical Advisory Committee review of this submission and look forward to an in-person presentation at your meeting.

Sincerely,

John R. Chagnon, PE

P:\NH\5010156-McNabb_Properties\3406-Congress St., Portsmouth-JRC\2025 Site Plan\03-WIP_Files\Application\Portsmouth Site Plan\TAC Workshop Site Plan Submission Letter 2024.11.05.doc

200 Griffin Rd., Unit 14, Portsmouth, NH 03801
T: 603.430.9282 | HALEYWARD.COM

Because the request for the encumbrance extends beyond 30 days, the Licensee has requested Council approval of this License.

Encumbrances for longer than 30 days are subject to the City Council's policy entitled "License Fee for Encumbrance of City Property". Under this policy, a daily fee of $0.05 per square foot of encumbered City property would be assessed for 115 square feet for a daily fee of $5.75 x 93 days for a total license fee of $534.75.

The Legal, Planning and Public Works Departments have reviewed and approved the form of the attached license.

If the Council agrees to grant a temporary construction license to encumber a parking space in the parking lot that abuts the South School Street Park for construction associated with property located at 50 South School Street, an appropriate motion would be:

Move that the City Manager be authorized to execute and accept the temporary construction license to encumber a parking space in the parking lot that abuts the South School Street Park as requested.

6. **Acceptance of Community Health Improvement Plan:**

The Community Health Improvement Plan ("Plan") was developed collaboratively with local social service agencies and other stakeholders to define a vision and a starting point for future community health improvement planning. This Plan will help inform the City's distribution of remaining ARPA funds to agencies impacted by the pandemic and serving vulnerable populations in priority community health improvement areas.

At the October 21, 2024 City Council meeting, a draft of the Plan was provided as an informational item for comment. City staff across multiple departments have reviewed the draft Plan and provided input to the City's Director of Public Health which has resulted in minor, but helpful edits to the original draft. We are seeking the City Council's acceptance of this final version of the Plan.

I recommend acceptance of the Community Health Improvement Plan as presented.

7. **Haven Court Land Swap:**

Mark McNabb, principal of One Market Square, LLC ("One Market Square"), has approached the City regarding a potential land swap in the area of Haven Court. This proposed transfer would provide the City with a deed to a portion of the High Hanover Garage which is encroaching on private property. In exchange, One Market Square is requesting the City convey a parcel of land adjacent to Fleet Street, which would provide One Market Square with title to the entirety of Haven Court. This would facilitate private improvements with public approval to the entirety to Haven Court, and in exchange the City would receive rights for public access, to install utilities, and to conduct maintenance on the High Hanover Garage.

At the City Council meeting on June 18, 2024, the City Council voted to refer this potential land swap to the Planning Board for a recommendation and report back.

At its regularly scheduled meeting on July 18, 2024, the Planning Board voted to recommend executing the land swap as described.

The City and One Market Square have entered into an agreement included in the City Council Agenda Packet (the "Agreement") for reference regarding proposed improvements to Haven Court, High Street and Ladd Street at One Market Square's expense. One Market Square now proposes to amend that agreement by proposing a land swap. Amendment 1 to the Agreement, as drafted by the Legal Department is included in the City Council packet.

This agreement would provide the City Manager with the authority to complete the land transfers as described and would provide the ability for the City to review and approve modifications to Haven Court by and through staff and the Public Art Review Committee. This is in line with review procedures for public realm improvements as described in the Agreement.

For clarity, the proposed land transfers are as follows:

- The City would convey the land shown on the plan as "Land to be conveyed to One Market Square, LLC" to One Market Square.
- One Market Square would convey to the City the land shown on the plan as "Land to be conveyed to the City of Portsmouth" to the City.
- One Market Square would convey to the City a public access easement and a utility easement over the entirety of Haven Court.
- One Market Square would be responsible for affecting the improvements to Haven Court, as described in the letter from One Market Square, at its sole cost and expense, and as approved by the City Manager's office or the Public Art Review Committee.
- The remaining terms of the Agreement with One Market Square would remain in full force and effect.

By making the proposed motion below, the City Council will confer the authority for the City Manager to (1) execute the Addendum 1 to the Agreement; (2) complete the land transfers as described; and, (3) grant the authority to approve improvements to Haven Court to the City Manager and the Public Art Review Committee.

I recommend that the City Council move to authorize the City Manager to execute and deliver an Addendum 1 to the 2023 Memorandum of Agreement with One Market Square, LLC in substantially similar form to the document contained in the agenda packet.

8. **Community Space Easement and Access Easement for Water Services for Property Located at 815 Lafayette Road:**

At its regularly scheduled meeting on January 18, 2024, the Planning Board granted site plan approval for the demolition of an existing building and tower along Sagamore Creek and the construction of three, four-story, 24-unit multifamily buildings, totaling 72 units, with associated site improvements. At the same meeting, the Planning Board granted a conditional use permit permitting work within the 100-foot wetlands buffer.

MEMORANDUM OF AGREEMENT

THIS AGREEMENT ("Agreement") is entered into this ___ day of December, 2023, between the One Market Square, LLC, a New Hampshire limited liability company, with an address of 3 Pleasant Street, Suite 400, Portsmouth, NH 03801 (the "Developer") and the City of Portsmouth, a New Hampshire municipality, with an address of 1 Junkins Avenue, Portsmouth, NH 03801 (the "City"). The Developer and the City may be collectively referred to herein as "the Parties".

WITNESSETH:

WHEREAS, the Developer is the owner of certain real property located at 1 Congress Street in the city of Portsmouth, located at Tax Map/Lot 117/14 (the "Property");

WHEREAS, the City is the owner of certain rights of way abutting the Property known as High Street and Ladd Street;

WHEREAS, the City and the Developer claim interest to portions of the abutting way known as Haven Court (together with High and Ladd Streets the "Rights of Way");

WHEREAS, the City owns a parking garage known as the High Hanover Garage, located on parcels at 34 Hanover Street and 44 High Street, Map/Lots 117/1 and 117/16, respectively (collectively the "High Hanover Garage");

WHEREAS, Wenberry Associates, LLC owns the abutting parcel located at 15 Congress Street, Tax Map/Lot 117/12 (the "Wenberry Parcel"):

WHEREAS, the Developer has obtained certain approvals from the City's land use boards to construct a 3-story mixed-use building with associated on-site and off-site improvements (see generally City permit number LU-22-12) (the "Developer's Project");

WHEREAS, as a part of the Developer's Project, the Developer plans to conduct substantial utility work within High Street, Ladd Street and Haven Court;

WHEREAS, the Parties recognize the public benefit to be derived from beautifying the Rights of Way and creating greater pedestrian connectivity from Penhallow Street through to Fleet Street;

WHEREAS, the Parties desire for the Developer, at its sole cost, to design, engineer and construct certain public realm improvements within the Rights of Way (collectively, and as further defined herein, the "Public Realm Improvements").

NOW, THEREFORE, the Parties agree as follows:

Part I: The Developer's Obligations.

A. The Public Realm Improvements

The Developer shall, at its sole cost and obligation design, engineer and install the following Public Realm Improvements in accordance with the drawing set attached as Exhibit A within the Rights of Way:

1. Repave the Rights of Way using decorative pavers as a pedestrian-vehicular shared space;
2. Install catenary lights over Haven Court, affixed to the High Hanover garage and the Developer's Property;
    a. The Developer shall attempt to negotiate the rights necessary to install catenary lights affixed to abutting private buildings, but failure to secure such rights shall not affect the validity of this Agreement nor prevent the Developer from installing the catenary lights affixed to the City Property and the Developer's Property, as shown in Exhibit A.
3. Install public fences, benches, railings, and other infrastructure within the Rights of Way.
4. Install an additional pedestrian entrance to the High Hanover Garage at the high point of Haven Court.
5. Install a stairway connecting Haven Court to Fleet Street.
6. All Public Realm Improvements on High Street and Ladd Street shall be compliant with the Americans with Disabilities Act (ADA), including but not limited to making the sidewalks flush with the streets.
7. All changes to the Public Realm Improvements from what is depicted in Exhibit A shall be submitted to the City Manager in writing and reviewed and approved by the Director of Public Works. If the City Manager, at her sole discretion, determines that any change is a material change to the aesthetics of the Public Realm Improvements, such change shall be reviewed and approved by the City's Public Art Review Committee (PARC).

B. Construction Obligations

The Developer shall complete at its sole cost and obligation the following tasks to secure the construction of the infrastructure described in Section I, A:

1. Prior to commencing any construction, the Developer shall submit construction plans to the City (the "Construction Plans"). The construction plans must be reviewed and approved by the Director of Public Works for consistency with City standards. The City may, at its sole discretion, employ a third-party engineer to conduct a peer review of the construction plans, and the cost of any third-party review shall be borne by the Developer.
2. The Developer shall secure the construction of the items above via a security instrument, such as a bond or letter of credit, in a form acceptable to the City Attorney. The value of the security instrument shall be estimated by the Developer and set by the Director of Public Works. Upon acceptance of the Public Realm Improvements by the City, the City shall release the security instrument.
3. The Developer shall enter into a Construction Management Mitigation Agreement (CMMP) with the City sufficient to describe the Developer's construction plan for the Public Realm Improvements and the Developer's Project. The CMMP shall

reasonably ensure vehicular and pedestrian public access to abutting properties, including but not limited to businesses and residences with entrances on the Rights of Way, the High Hanover Garage and other adjacent parking facilities. This shall also include access for police, fire, and trash pickup by the City. The Parties understand there will be times access is limited or interrupted to parking, traffic flow and sidewalks and the Developer is responsible for coordinating those interruptions with the City and abutters prior to making any interruption of normal vehicular and pedestrian access.

4. The Developer shall provide written notice to abutters and their tenants, as may be reasonably identified, at the construction stages, to be established by the CMMP. These notices shall be in any event no less than once per month.
5. As a part of the CMMP, the Developer shall designate a Project Manager, who shall serve as the point of contact for all public inquiries regarding the Public Realm Improvements, the Developer's Project, and the related impacts on vehicular travel. This point of contact shall be available to respond to public inquiries and respond to requests within 24 hours.
6. The Developer shall provide the City with proof of insurance at the City's customary levels for the period of construction of the Public Realm Improvements. The proof of insurance shall list the City as an additional insured.
7. The Developer shall secure the legal rights necessary to construct the anticipated Public Realm Improvements over the Wenberry Parcel. The Developer shall provide evidence of sufficient legal rights to the City prior to the commencement of the construction of any Public Realm Improvements.
8. Following construction of the Public Realm Improvements, the Developer shall provide the City with as-built drawings depicting the Public Realm Improvements.

Part II: The City's Obligations

1. The City shall employ a third-party engineer to oversee the construction of the Public Realm Improvements. The cost of the third-party engineer shall be paid by the Developer, subject to the reasonable approval by the Developer of the company to be employed, the scope of work and cost.
2. The City or the Developer may procure a third-party study of the feasibility of a shared trash and recycling area within the High Hanover Garage.
3. The City or the Developer may procure a third-party study by an experienced land use firm and Parking/traffic engineer for the three entrances to the High Hanover Garage so the City may consider any changes to those entrances.
4. The City hereby waives all license fees applicable to the construction of the Public Realm Improvements. This provision shall not apply to any permit fees required pursuant to the Developer's Project.
5. The City shall designate a Project Manager for the Public Realm Improvements. All communications regarding the Public Realm Improvements from the Developer shall be addressed to the Project Manager, with a copy to the City Attorney.
6. Following approval of the Public Realm Improvements by the City's third-party engineer and the Director of Public Works, the City shall accept ownership in writing of all Public Realm Improvements, excepting the catenary lights. If review

by the City's third-party engineer or the City's Public Works Department reveal the Public Realm Improvements are not constructed to City standards or the Construction Plans, the Developer shall cause the insufficiencies to be remedied to the City's satisfaction.

7. The City and Developer shall negotiate, execute and record as necessary any and all easements, licenses, joint use agreements or other documents reasonably necessary to complete the obligations set forth herein. The City Council, by vote of August 21, 2023 expressly delegates authority to the City Manager to negotiate, convey and/or accept land interests reasonably necessary for the purposes of this paragraph.
8. The City shall eliminate or otherwise relocate a parking space within the High Hanover Garage to facilitate the construction of the additional pedestrian entrance to the High Hanover Garage.
9. The Parties agree the improvements being made to High Street and Ladd Street reflected in Exhibit A will become City property upon acceptance of the Public Realm Improvements by the City, and nothing in this Agreement shall be construed to prohibit the City from making any changes to High Street and Ladd Street, including their use, in the future.

Part III: Miscellaneous

1. Compliance with other laws: The Developer acknowledges that their obligations under this contract are subject to full compliance with all applicable state, federal, and local laws, and failure to adhere to such laws shall constitute a material breach of this contract.

2. Costs: Following acceptance of the Public Realm Improvements by the City, the City shall assume maintenance of the Rights of Way. The City's maintenance obligations shall not exceed the ordinary maintenance responsibilities for any other right of way in the City. For the purposes of this paragraph, the catenary lights are specifically exempted and maintenance for the catenary lights shall be the responsibility of the Developer.

3. Entire Agreement. This Agreement and the attachments hereto, each of which is hereby incorporated herein, sets forth all the agreements, promises, covenants conditions and undertakings between the parties with respect to the subject matter hereof, and supersedes all prior and contemporaneous agreements and understandings, inducements, or conditions, express or implied, oral or written.

4. Amendment. No waiver or modification of any of the terms of this Agreement shall be valid unless in writing and signed by each of the parties hereto. Failure by any party to enforce any rights under this Agreement shall not be construed as a waiver of such rights, and a waiver by any party of a default hereunder in one or more instances shall not be construed as constituting a continuing waiver or as a waiver of other instances of default.

5. Waiver of Breach: The failure of either party to enforce any provision of this contract shall not be construed as a waiver of subsequent breaches or as a relinquishment of the right to enforce such provisions. No waiver by either party of any breach of this contract shall be deemed to be a waiver of any other or subsequent breach.

6. Governing Law. The construction and effect of the terms of this Agreement shall be determined in accordance with the laws of the State of New Hampshire.

For the City of Portsmouth

Karen S. Conard
Karen S. Conard (Dec 12, 2023 15:34 EST)

Karen S. Conard, City Manager
Dated: 12/12/2023
Pursuant to vote of the City Council
On August 21, 2023.

Reviewed by Trevor P. McCort
Deputy City Attorney

Trevor P. McCourt
Trevor P. McCourt (Dec 12, 2023 15:33 EST)

For the Developer: One Market Square, LLC

Signature:
Dated: 12/13/2023
Printed Name: Mark A. McNabb, Manager

EXHIBIT A

IMPROVEMENT PLANS

HIGH STREET, LADD STREET & HAVEN COURT
PORTSMOUTH, NEW HAMPSHIRE

CITY COUNCIL APPROVAL SET

PROJECT PROPONENT:
ONE MARKET SQUARE LLC
3 PLEASANT STREET
SUITE #400
PORTSMOUTH, NH 03801
TEL. (603) 427-0725

LAND SURVEYOR & CIVIL ENGINEER:
AMBIT ENGINEERING, INC.
200 GRIFFIN ROAD, UNIT 3
PORTSMOUTH, N.H. 03801
Tel. (603) 430-9282
Fax (603) 436-2315

ARCHITECT:
ARCOVE LLC
3 CONGRESS STREET
SUITE 1
PORTSMOUTH, NH 03801
TEL. (603) 731-5187

LANDSCAPE ARCHITECT:
TERRA FIRMA LANDSCAPE ARCHITECTURE
163A COURT STREET
PORTSMOUTH, NH 03801
TEL. (603) 430-8388

GEOTECHNICAL:
GEOTECHNICAL SERVICES INC.
18 COTE AVENUE, UNIT 11
GOFFSTOWN, N.H. 03045
Tel. (603) 624-2722

LAND USE ATTORNEY:
BRUTON & BERUBE, PLLC
601 CENTRAL AVENUE
DOVER, N.H. 03820
Tel. (603) 749-4529

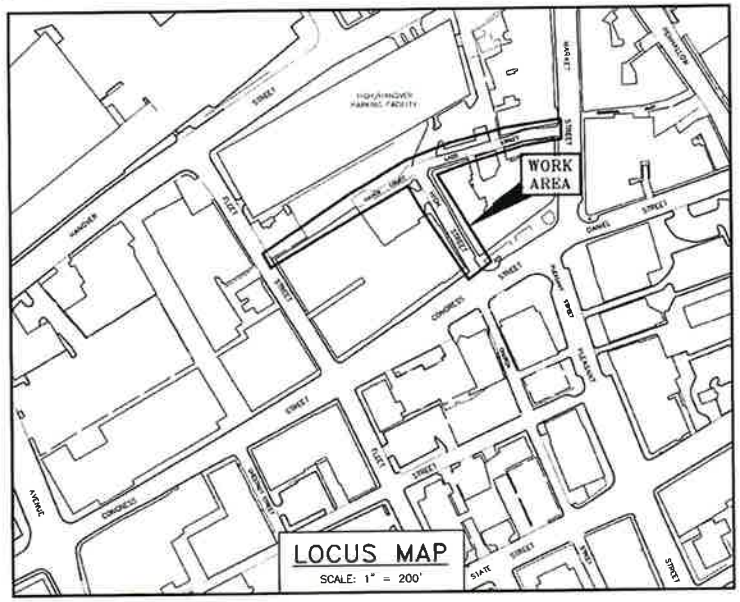

DIG SAFE
ME - NH - RI - VT
1-888-344-7233
CALL TOLL FREE

INDEX OF SHEETS

EXISTING CONDITIONS / WORK AREA
PEDESTRIAN CONNECTIONS
LANDSCAPE PLAN-HAVEN COURT
LANDSCAPE PLAN-HIGH STREET
LANDSCAPE PLAN-LADD STREET
LANDSCAPE PLAN-PLANTING
LANDSCAPE DETAILS
LANDSCAPE PERSPECTIVES
PROPOSED UTILITIES-WORK AREA

UTILITY CONTACTS

ELECTRIC:
EVERSOURCE
1700 LAFAYETTE ROAD
PORTSMOUTH, N.H. 03801
Tel. (603) 436-7708, Ext. 555.5678
ATTN: MICHAEL BUSBY, P.E. (MANAGER)

NATURAL GAS:
UNITIL
325 WEST ROAD
PORTSMOUTH, N.H. 03801
Tel. (603) 294-5144
ATTN: DAVE BEAULIEU

CABLE:
COMCAST
155 COMMERCE WAY
PORTSMOUTH, N.H. 03801
Tel. (603) 679-5695 (X1037)
ATTN: MIKE COLLINS

SEWER & WATER:
PORTSMOUTH DEPARTMENT OF PUBLIC WORKS
680 PEVERLY HILL ROAD
PORTSMOUTH, N.H. 03801
Tel. (603) 427-1530
ATTN: JIM TOW

COMMUNICATIONS:
FAIRPOINT COMMUNICATIONS
JOE CONSIDINE
1575 GREENLAND ROAD
GREENLAND, N.H. 03840
Tel. (603) 427-5525

LEGEND:

EXISTING	PROPOSED	
		PROPERTY LINE
		SETBACK
S	S	SEWER PIPE
SL	SL	SEWER LATERAL
G	G	GAS LINE
D	D	STORM DRAIN
W	W	WATER LINE
WS	WS	WATER SERVICE
UGE	UGE	UNDERGROUND ELECTRIC
OHW	OHW	OVERHEAD ELECTRIC/WIRES
	UD	FOUNDATION DRAIN
		EDGE OF PAVEMENT (EP)
100	100	CONTOUR
97x3	98x0	SPOT ELEVATION
		UTILITY POLE
		WALL MOUNTED EXTERIOR LIGHTS
		TRANSFORMER ON CONCRETE PAD
		ELECTRIC HANDHOLD
		SHUT OFFS (WATER/GAS)
	CV	GATE VALVE
	HYD	HYDRANT
CB	CB	CATCH BASIN
S	SMH	SEWER MANHOLE
D	DMH	DRAIN MANHOLE
T	TMH	TELEPHONE MANHOLE
14	14	PARKING SPACE COUNT
		PARKING METER
LSA		LANDSCAPED AREA
TBD	TBD	TO BE DETERMINED
CI	CI	CAST IRON PIPE
COP	COP	COPPER PIPE
DI	DI	DUCTILE IRON PIPE
PVC	PVC	POLYVINYL CHLORIDE PIPE
RCP	RCP	REINFORCED CONCRETE PIPE
AC	–	ASBESTOS CEMENT PIPE
VC	VC	VITRIFIED CLAY PIPE
EP	EP	EDGE OF PAVEMENT
EL.	EL.	ELEVATION
FF	FF	FINISHED FLOOR
INV	INV	INVERT
S =	S =	SLOPE FT/FT
TBM	TBM	TEMPORARY BENCH MARK
TYP	TYP	TYPICAL

CITY COUNCIL APPROVAL PLAN SET
IMPROVEMENT PLANS
HIGH STREET, LADD STREET & HAVEN COURT
PORTSMOUTH, N.H.

AMBIT ENGINEERING, INC.
A DIVISION OF HALEY WARD, INC.

WWW.HALEYWARD.COM

200 Griffin Road, Unit 3
Portsmouth, NH 03801
603.430.9282

PLAN SET SUBMITTAL DATE: 3 JULY 2023

50101156 | J406

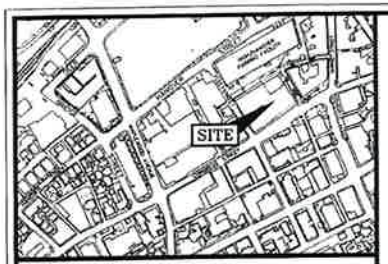

LOCATION MAP SCALE: 1" = 300'

PLAN REFERENCE:

STANDARD BOUNDARY SURVEY, TAX MAP 117, LOTS 14 & 15, FOR PETER H. JARVIS & SONS, LLC 1 CONGRESS STREET & HIGH STREET, CITY OF PORTSMOUTH, COUNTY OF ROCKINGHAM, STATE OF NEW HAMPSHIRE PREPARED BY AMBIT ENGINEERING, INC DATED NOVEMBER 2021, ISSUED FOR RECORDING 12/8/21 R.C.R.D. PLAN D-43295

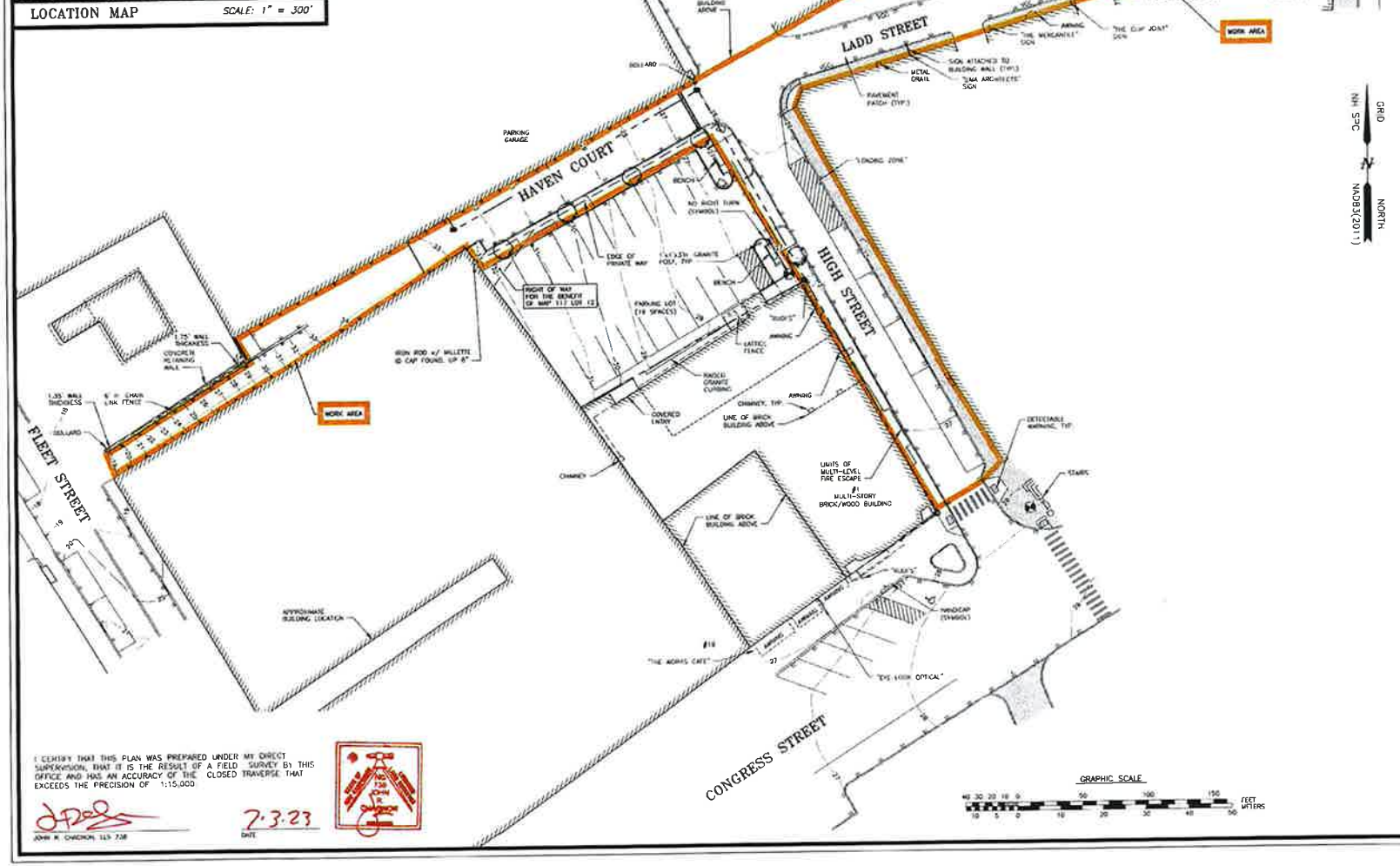

I CERTIFY THAT THIS PLAN WAS PREPARED UNDER MY DIRECT SUPERVISION, THAT IT IS THE RESULT OF A FIELD SURVEY BY THIS OFFICE AND HAS AN ACCURACY OF THE CLOSED TRAVERSE THAT EXCEEDS THE PRECISION OF 1:15,000

JOHN R. CHAGNON, LLS 738

7-3-23
DATE

AMBIT ENGINEERING, INC.
A DIVISION OF HALEY WARD, INC

WWW.HALEYWARD.COM

NOTES:

1) 1 CONGRESS DEVELOPMENT PARCEL IS SHOWN ON THE CITY OF PORTSMOUTH ASSESSORS MAP 117 AS LOT 14.

2) OWNER OF RECORD (MAP 117 LOT 14)
ONE MARKET SQUARE, LLC
3 PLEASANT STREET, SUITE 400
PORTSMOUTH, NH 03801
6363/31 PARCEL 1 & PARCEL 2

3) THE PURPOSE OF THIS PLAN IS TO SHOW THE AREA OF WORK ASSOCIATED WITH THE IMPROVEMENT PLANS.

NO	DESCRIPTION	DATE
0	ISSUED FOR COMMENT	7/3/23

REVISIONS

EXISTING CONDITIONS WORK AREA

OWNER OF RECORD:

THE CITY OF PORTSMOUTH
HIGH STREET, LADD STREET & HAVEN COURT
CITY OF PORTSMOUTH
COUNTY OF ROCKINGHAM
STATE OF NEW HAMPSHIRE

SCALE 1" = 40' JUNE 2023

FB 309 PG 15 5010158 3406

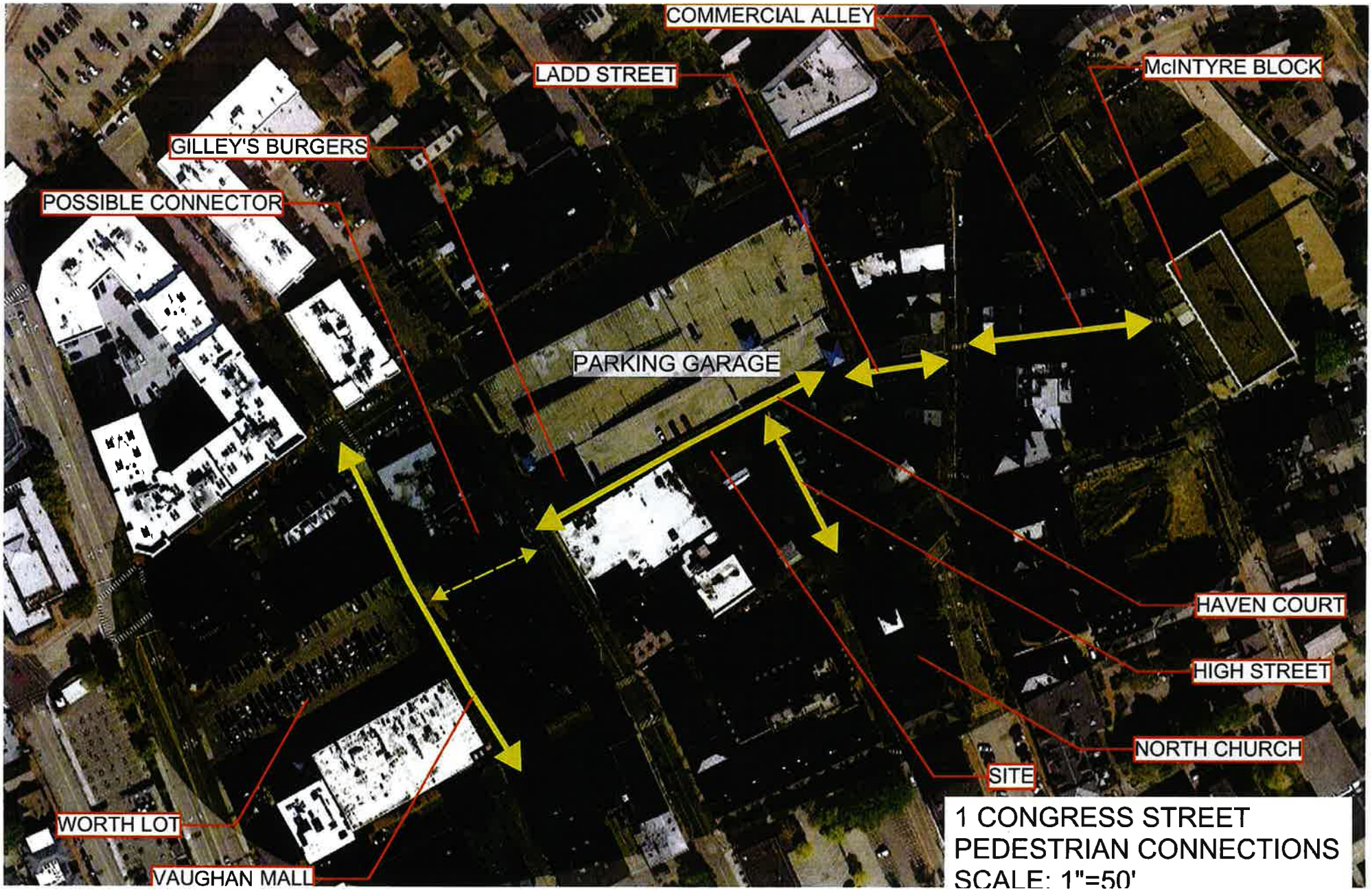

1 CONGRESS STREET
PEDESTRIAN CONNECTIONS
SCALE: 1"=50'

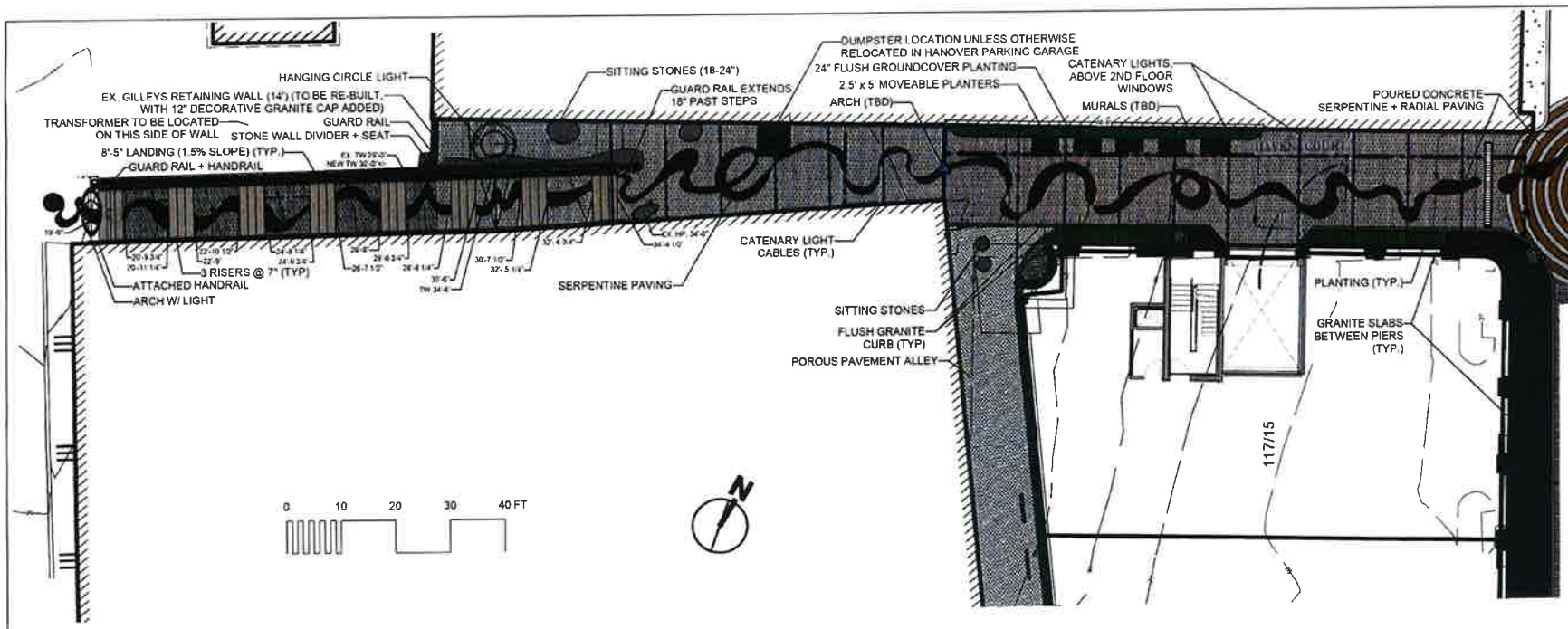

LANDSCAPE NOTES:

1. THE CONTRACTOR SHALL LOCATE AND VERIFY THE EXISTENCE OF ALL UTILITIES PRIOR TO STARTING WORK.
2. THE CONTRACTOR SHALL SUPPLY ALL PLANT MATERIALS IN QUANTITIES SUFFICIENT TO COMPLETE THE PLANTINGS SHOWN ON THE DRAWINGS.
3. ALL MATERIAL SHALL CONFORM TO THE GUIDELINES ESTABLISHED BY THE CURRENT AMERICAN STANDARD FOR NURSERY STOCK PUBLISHED BY THE AMERICAN ASSOCIATION OF NURSERYMEN.
4. ALL PLANT SUBSTITUTIONS MUST BE APPROVED BY THE LANDSCAPE ARCHITECT.
5. ALL PLANT MATERIALS SHALL BE EXACTLY AS SPECIFIED BY THE LANDSCAPE ARCHITECT. IF PLANT SPECIES CULTIVARS ARE FOUND TO VARY FROM THAT SPECIFIED AT ANY TIME DURING THE GUARANTEE PERIOD, THE LANDSCAPE ARCHITECT RESERVES THE RIGHT TO HAVE THE CONTRACTOR REPLACE THAT PLANT MATERIAL. THE LANDSCAPE ARCHITECT RESERVES THE RIGHT TO REJECT ANY PLANT DELIVERED TO THE SITE FOR AESTHETIC REASONS BEFORE PLANTING. THE LANDSCAPE CONTRACTOR IS RESPONSIBLE FOR THE QUALITY FOR ALL THE PLANTS.
6. PLANTS SHALL BE SUBJECT TO INSPECTION AND APPROVAL AT THE PLACE OF GROWTH, UPON DELIVERY OR AT THE JOB SITE WHILE WORK IS ON-GOING TO CONFORMITY TO SPECIFIED QUALITY, SIZE AND VARIETY.
7. PLANTS FURNISHED IN CONTAINERS SHALL HAVE THE ROOTS WELL ESTABLISHED IN THE SOIL MASS AND SHALL HAVE AT LEAST ONE (1) GROWING SEASON. ROOT-BOUND PLANTS OR INADEQUATELY SIZED CONTAINERS TO SUPPORT THE PLANT MAY BE DEEMED UNACCEPTABLE.
8. NO PLANT SHALL BE PUT IN THE GROUND BEFORE GRADING HAS BEEN FINISHED AND APPROVED BY THE LANDSCAPE ARCHITECT.
9. ALL PLANTS SHALL BE INSTALLED AND DETAILED PER PROJECT SPECIFICATIONS.
10. ALL PLANTS SHALL BE WATERED THOROUGHLY TWICE DURING THE FIRST 24-HOUR PERIOD AFTER PLANTING. ALL PLANTS SHALL BE WATERED WEEKLY, OR MORE OFTEN IF NECESSARY, DURING THE FIRST GROWING SEASON.
11. ALL PLANTS SHALL BE GUARANTEED BY THE CONTRACTOR FOR NOT LESS THAN ONE FULL YEAR FROM THE TIME OF PROVISIONAL ACCEPTANCE. DURING THIS TIME, THE OWNER SHALL MAINTAIN ALL PLANT MATERIALS IN THE ABOVE MANNER. IT IS THE CONTRACTORS RESPONSIBILITY TO INSPECT THE PLANTS TO ENSURE PROPER CARE. IF THE CONTRACTOR IS DISSATISFIED WITH THE CARE GIVEN, HE SHALL IMMEDIATELY, AND IN SUFFICIENT TIME TO PERMIT THE CONDITION TO BE RECTIFIED, NOTIFY THE LANDSCAPE ARCHITECT IN WRITING OR OTHERWISE FORFEIT HIS CLAIM. LANDSCAPE CONTRACTOR SHALL PRUNE PLANTINGS OF DEAD LIMBS OR TWIGS DURING THE FIRST YEAR OF GROWTH.
12. FINAL ACCEPTANCE BY THE LANDSCAPE ARCHITECT WILL BE MADE UPON THE CONTRACTOR'S REQUEST AFTER ALL CORRECTIVE WORK HAS BEEN COMPLETED.
13. LANDSCAPE CONTRACTOR SHOULD REPLACE DEAD PLANTINGS IMMEDIATELY UPON OWNER DIRECTION WITHIN THE WARRANTY PERIOD AND AGAIN AT THE END OF THE GUARANTEE PERIOD. THE CONTRACTOR SHALL HAVE REPLACED ANY PLANT MATERIAL THAT IS MISSING, NOT TRUE TO SIZE AS SPECIFIED, THAT HAVE DIED, THAT HAVE LOST THEIR NATURAL SHAPE DUE TO DEAD BRANCHES, EXCESSIVE PRUNING OR INADEQUATE OR IMPROPER CARE, OR THAT ARE, IN THE OPINION OF THE LANDSCAPE ARCHITECT, IN UNHEALTHY OR UNSIGHTLY CONDITION.
14. ALL LANDSCAPE AREAS TO BE GRASS COMMON TO REGION EXCEPT FOR INTERIOR LANDSCAPED ISLANDS OR WHERE OTHER PLANT MATERIAL IS CALLED FOR.
15. ALL TREES AND SHRUBS TO BE PLANTED IN MULCH BEDS WITH DEFINED AND CUT EDGES TO SEPARATE TURF GRASS AREAS.
16. FOR ANY LANDSCAPE AREA SO DESIGNATED TO REMAIN, WHETHER ON OR OFF SITE, REMOVE WEEDS, ROCKS, CONSTRUCTION ITEMS, ETC., THEN APPLY GRASS SEED OR PINE BARK MULCH AS DEPICTED ON PLANS.
17. LANDSCAPE CONTRACTOR SHALL FEED AND PRUNE EX. TREES, ON OR JUST OFF SITE, THAT HAVE EXPERIENCED ROOT BASE INTRUSION OR DAMAGE DURING CONSTRUCTION IMMEDIATELY AND FOR THE DURATION OF THE WARRANTY PERIOD AT THE DIRECTION OF THE LANDSCAPE ARCHITECT.
18. EXISTING TREES TO REMAIN SHALL BE PROTECTED WITH TEMPORARY SNOW FENCING AT THE EDGE OF THE EX. TREE CANOPY. THE CONTRACTOR SHALL NOT STORE VEHICLES OR MATERIALS WITHIN THE LANDSCAPED AREAS. ANY DAMAGE TO EXISTING TREES, SHRUBS OR LAWN SHALL BE REPAIRED BY THE CONTRACTOR AT NO ADDITIONAL COST TO THE OWNER.
19. ALL MULCH AREAS SHALL RECEIVE A 2" LAYER OF SHREDDED PINE BARK MULCH.
20. ALL WORK SHALL BE DONE IN STRICT ACCORDANCE WITH PROJECT SPECIFICATIONS.

PLEASE NOTE: THIS SHEET IS SCALED FOR 11 BY 17 PAPER. DO NOT REDUCE OR ENLARGE

terra firma landscape architecture

terra firma landscape architecture
163 a Court Street
Portsmouth, NH 03801

ONE CONGRESS STREET

LANDSCAPE PLAN - HAVEN COURT

L-1A

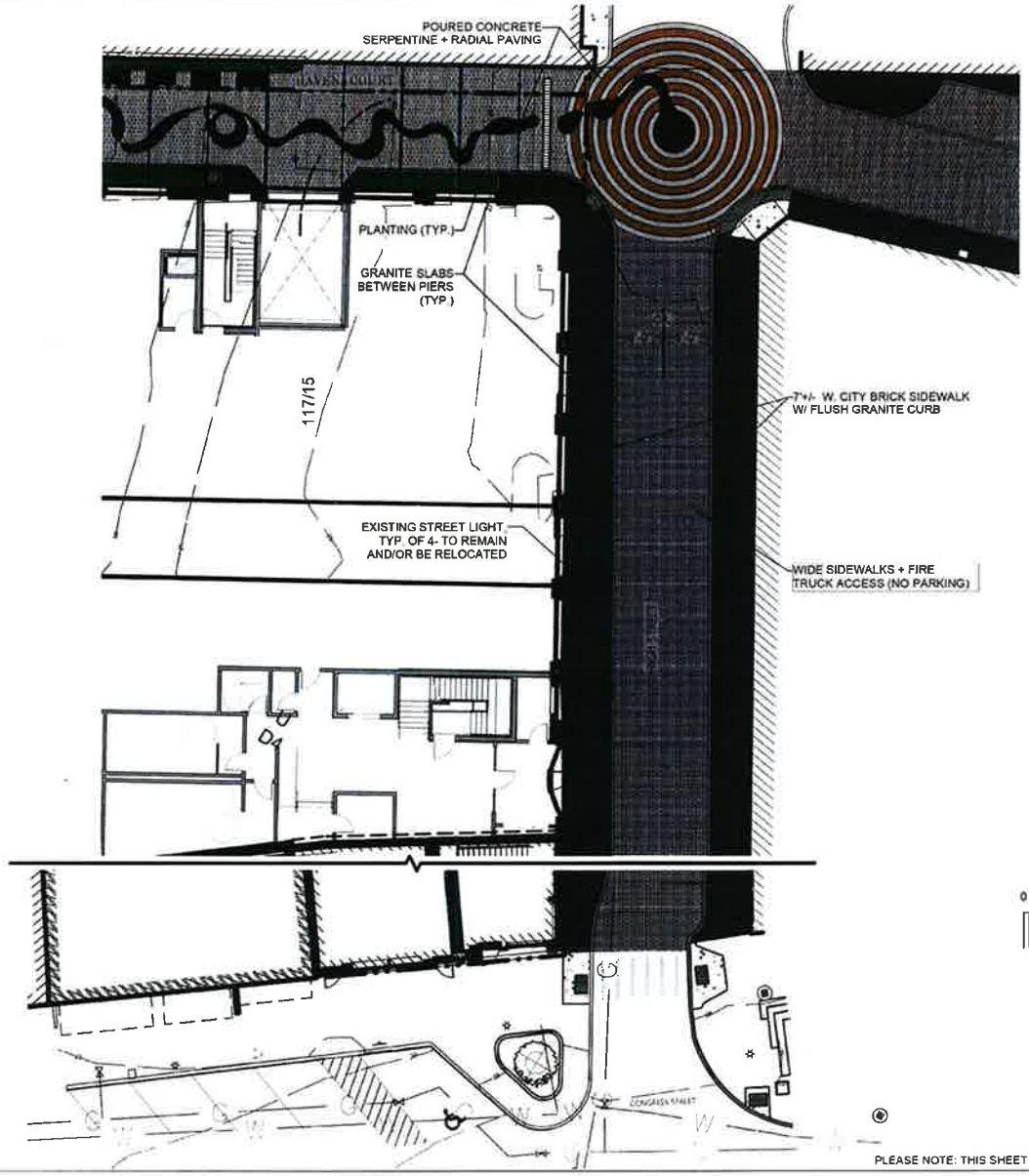

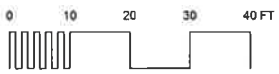

PLEASE NOTE: THIS SHEET IS SCALED FOR 11 BY 17 PAPER, DO NOT REDUCE OR ENLARGE

terra firma
landscape architecture

Rev	Date	Description
D	11/2/21	CITY COUNCIL APPROVAL SET
C	9/17/21	POROUS PAVER PLAN
B	7/16/21	POROUS PAVER NOTE
A	5/22/21	NOTE ADDED, WALL MODIFIED

terra firma landscape architecture
163 a Court Street
Portsmouth NH 03801

ONE CONGRESS STREET

LANDSCAPE PLAN - HIGH STREET

Project Manager

ONE CONGRESS STREET

L-1B

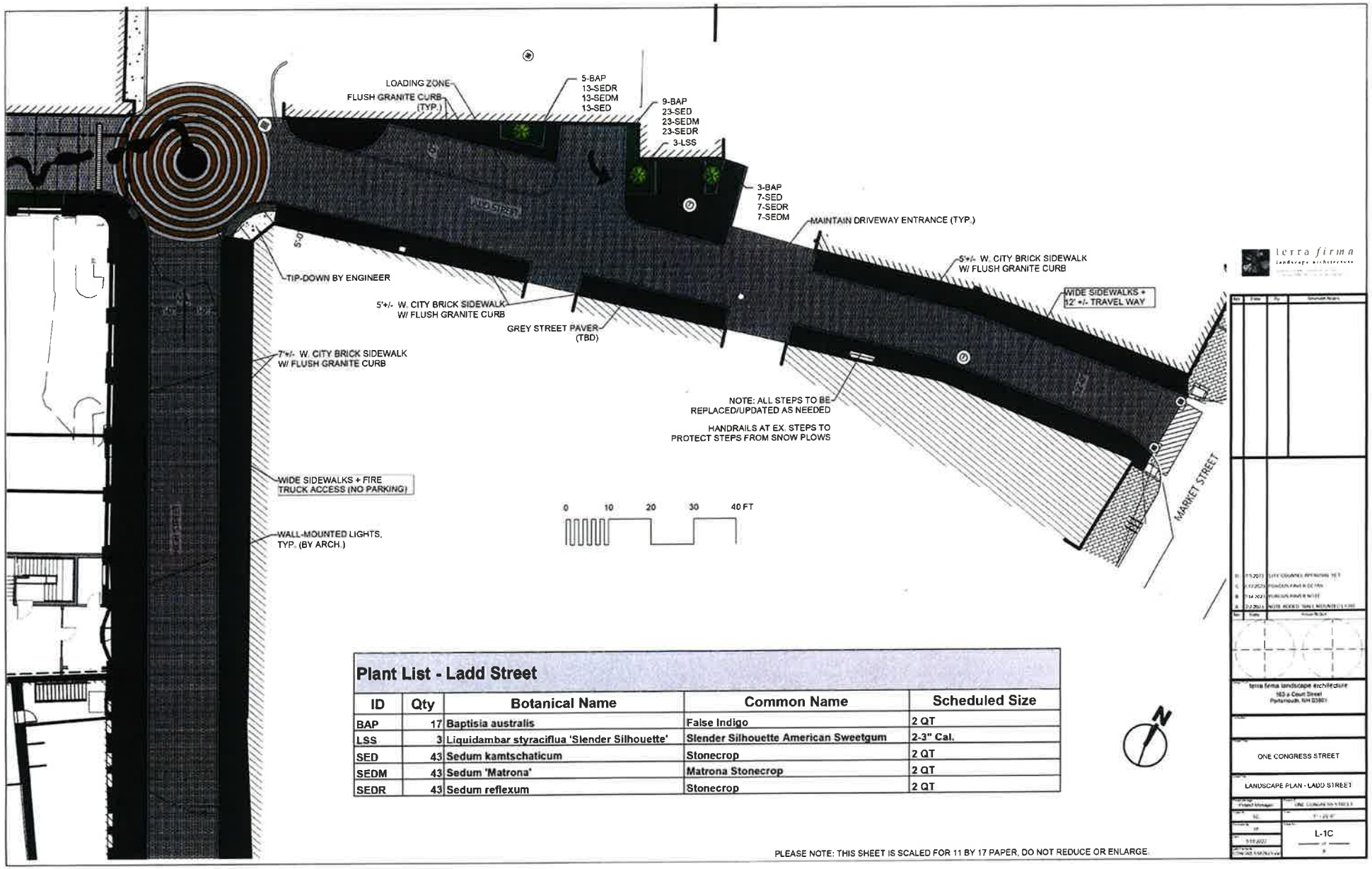

Plant List - Ladd Street

ID	Qty	Botanical Name	Common Name	Scheduled Size
BAP	17	Baptisia australis	False Indigo	2 QT
LSS	3	Liquidambar styraciflua 'Slender Silhouette'	Slender Silhouette American Sweetgum	2-3" Cal.
SED	43	Sedum kamtschaticum	Stonecrop	2 QT
SEDM	43	Sedum 'Matrona'	Matrona Stonecrop	2 QT
SEDR	43	Sedum reflexum	Stonecrop	2 QT

PLEASE NOTE: THIS SHEET IS SCALED FOR 11 BY 17 PAPER, DO NOT REDUCE OR ENLARGE.

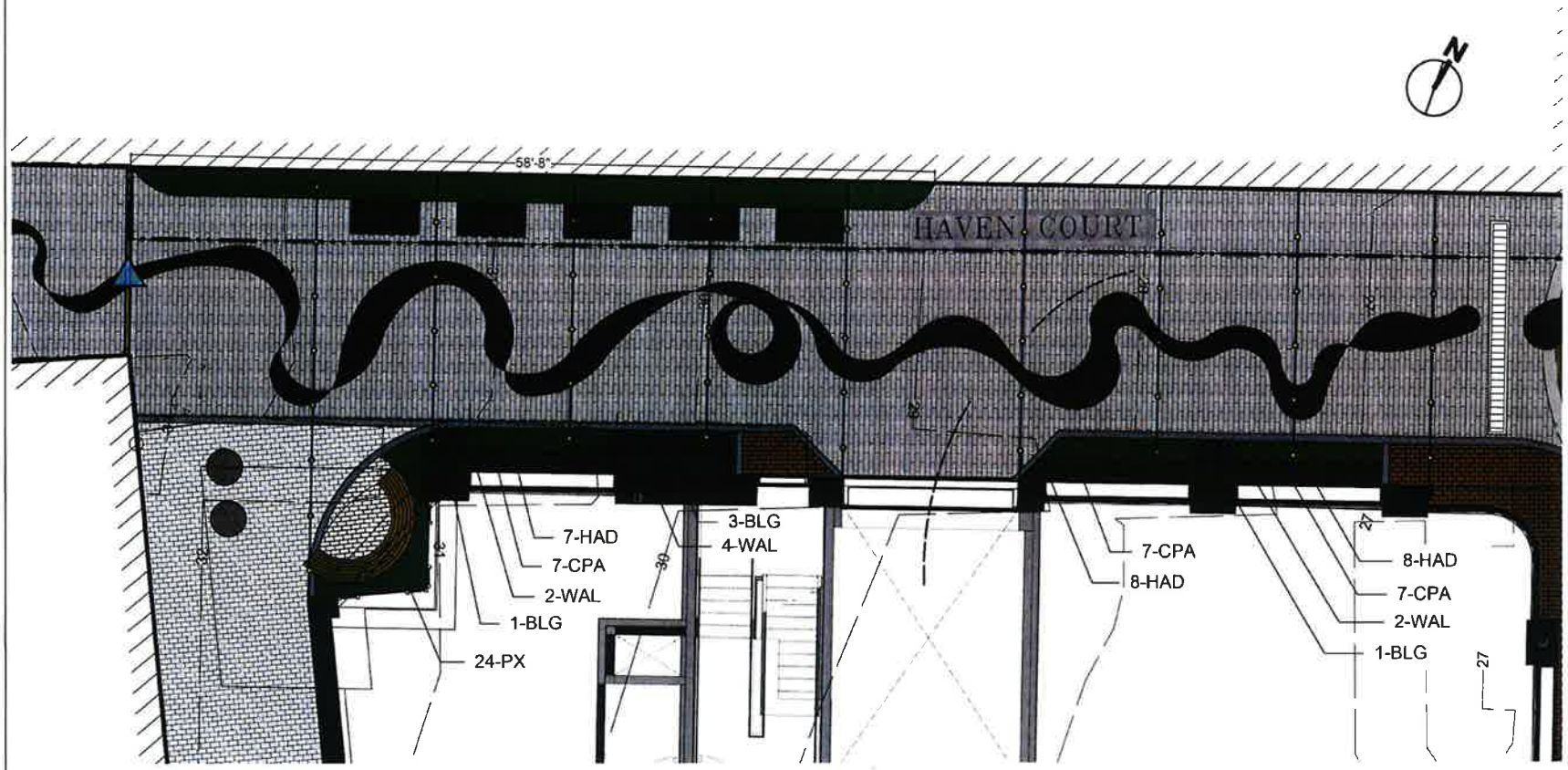

Plant List

ID	Qty	Botanical Name	Common Name	Scheduled Size
BLG	5	Buxus m. 'Little Gem'	Little Gem Boxwood	3 Gal.
CPA	21	Carex appalachia	Appalachian Sedge	2 QT
HAD	23	Heuchera americana 'Dale'	Dale's Strain Coral Bells	2 QT
PX	24	Polystichum acrostichoides	Christmas Fern	2 QT
WAL	8	Waldsteinia ternata	Siberian Barren Strawberry	2 QT

0 4 8 12 16 FT

PLEASE NOTE THIS SHEET IS SCALED FOR 11 BY 17 PAPER. DO NOT REDUCE OR ENLARGE

terra firma landscape architecture
165 a Court Street
Portsmouth, NH 03801

ONE CONGRESS STREET

LANDSCAPE PLAN - PLANTING

L-2

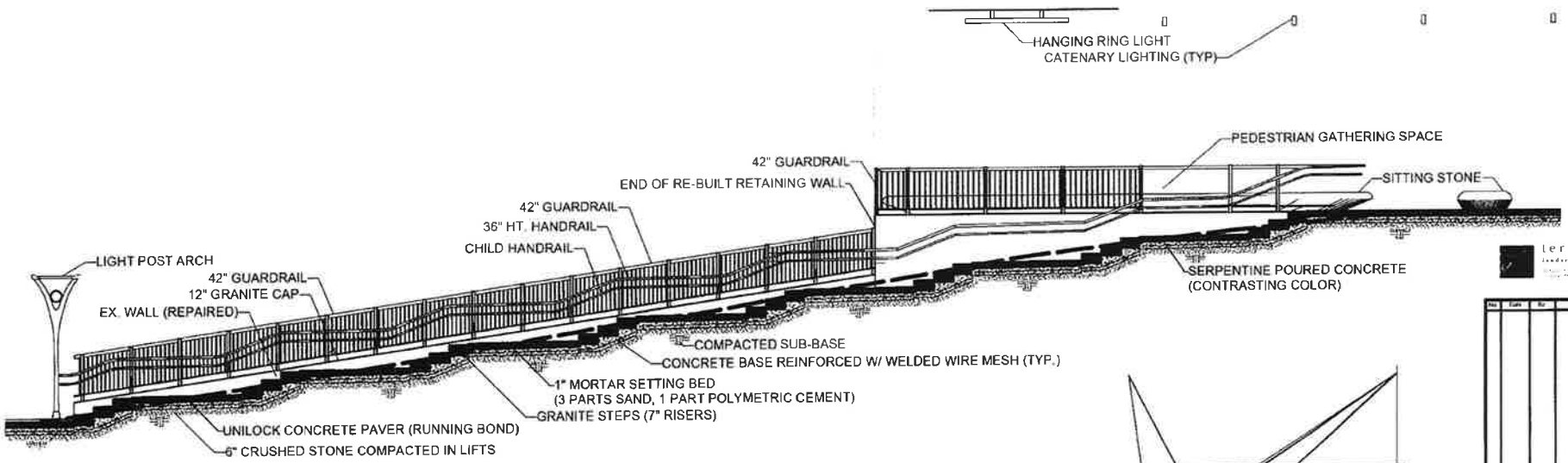

1
L-3

HAVEN COURT STEP DETAIL
SCALE: 1/8"=1'-0"

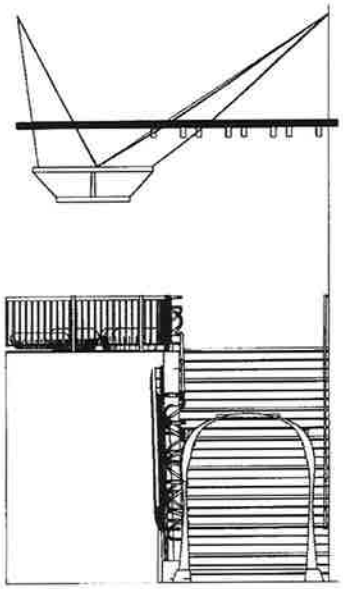

2
L-3

HAVEN COURT ARCH DETAIL
SCALE: 1/8"=1'-0"

PLEASE NOTE: THIS SHEET IS SCALED FOR 11 BY 17 PAPER. DO NOT REDUCE OR ENLARGE.

terra firma landscape architecture
163 A Court Street
Portsmouth, NH 03801

ONE CONGRESS STREET

LANDSCAPE DETAILS

L-3

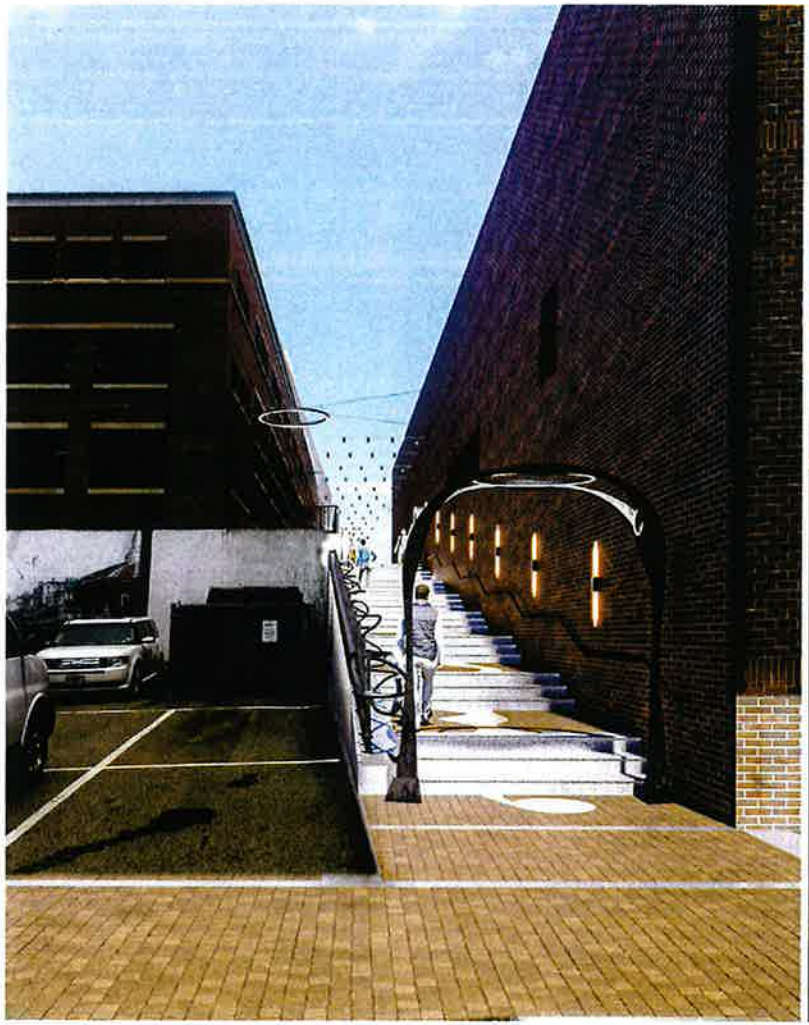

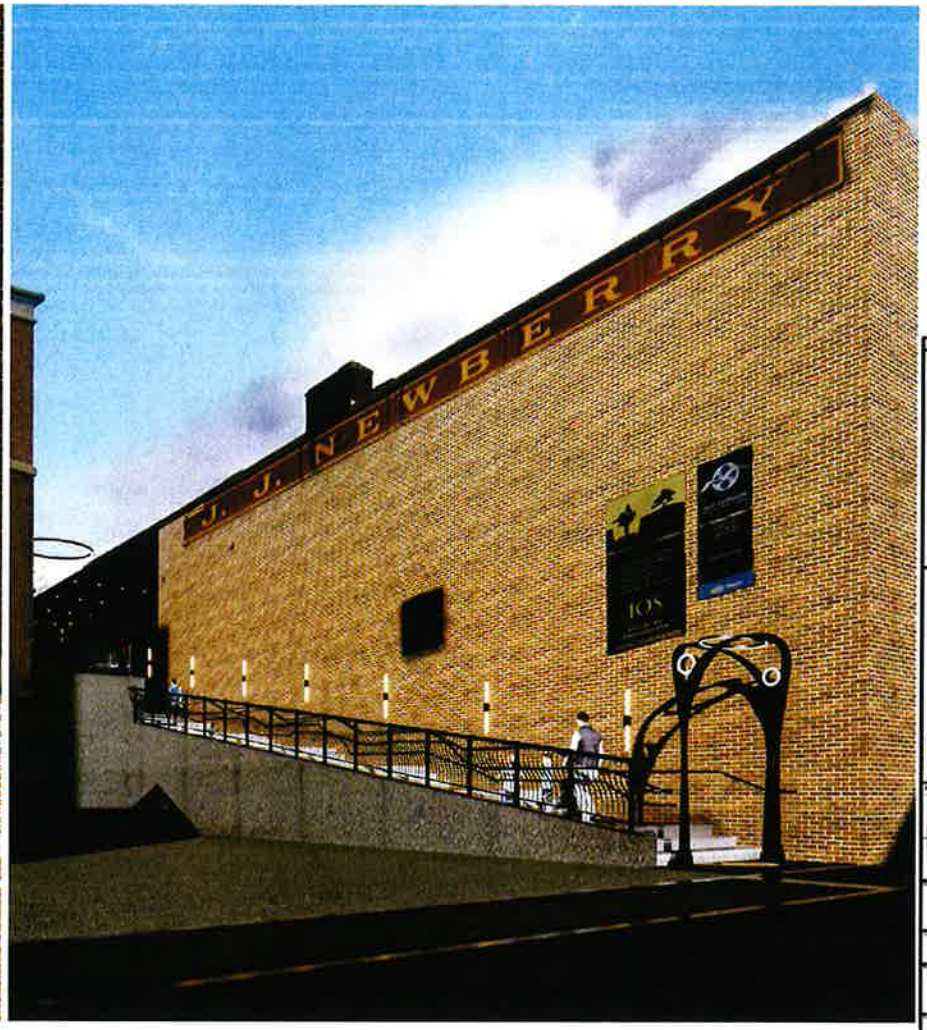

1 STEPS FROM FLEET STREET
L-4 SCALE: NTS

PLEASE NOTE: THIS SHEET IS SCALED FOR 11 BY 17 PAPER. DO NOT REDUCE OR ENLARGE

terra firma
landscape architecture

No	Date	By	Issued/Revisions
E	11-3-2023		CITY COMMENTS AND NOTE NO. 1
C	9-27-2023		PORCH FINAL SECTION
B	7-14-2023		PORCH FINAL PLAN
A	2-23-2023		INITIAL SITE PLAN - SMALL MIXED USE STUDY

terra firma landscape architecture
153 a Court Street
Portsmouth, NH 03801

ONE CONGRESS STREET

LANDSCAPE PERSPECTIVES

L-4

1
L-5

STEPS FROM FLEET STREET
SCALE: NTS

PLEASE NOTE: THIS SHEET IS SCALED FOR 11 BY 17 PAPER. DO NOT REDUCE OR ENLARGE

terra firma
landscape architecture

No	Date	By	Description

No	Date	Issue Notes
D	[illegible]	CITY COMMENTS APPROVAL SET
C	[illegible]	PLANNING PROJECT TEAM
B	[illegible]	PLANNING PANEL IN NOTES
A	[illegible]	NOTE ADDED - DATA INCORPORATED CORR

terra firma landscape architecture
183 a Court Street
Portsmouth, NH 03801

ONE CONGRESS STREET

LANDSCAPE PERSPECTIVES

L-5

1 STONE SEATING NEAR FLEET STREET STEPS
L-6 SCALE: NTS

PLEASE NOTE: THIS SHEET IS SCALED FOR 11 BY 17 PAPER, DO NOT REDUCE OR ENLARGE

terra firma
landscape architecture

No	Date	By	Issuance Notes
D	4/13/23		CITY COUNCIL APPROVAL SET
C	3/17/23		PORCH & PAVILION SET
B	11/7/22		PORCH & PAVILION SET
A	8/24/22		NOTE REDEFINED, SMALL MOUNTED CART

No	Date	Issue Notes

terra firma landscape architecture
163 a Court Street
Portsmouth, NH 03801

ONE CONGRESS STREET

LANDSCAPE PERSPECTIVES

L-6

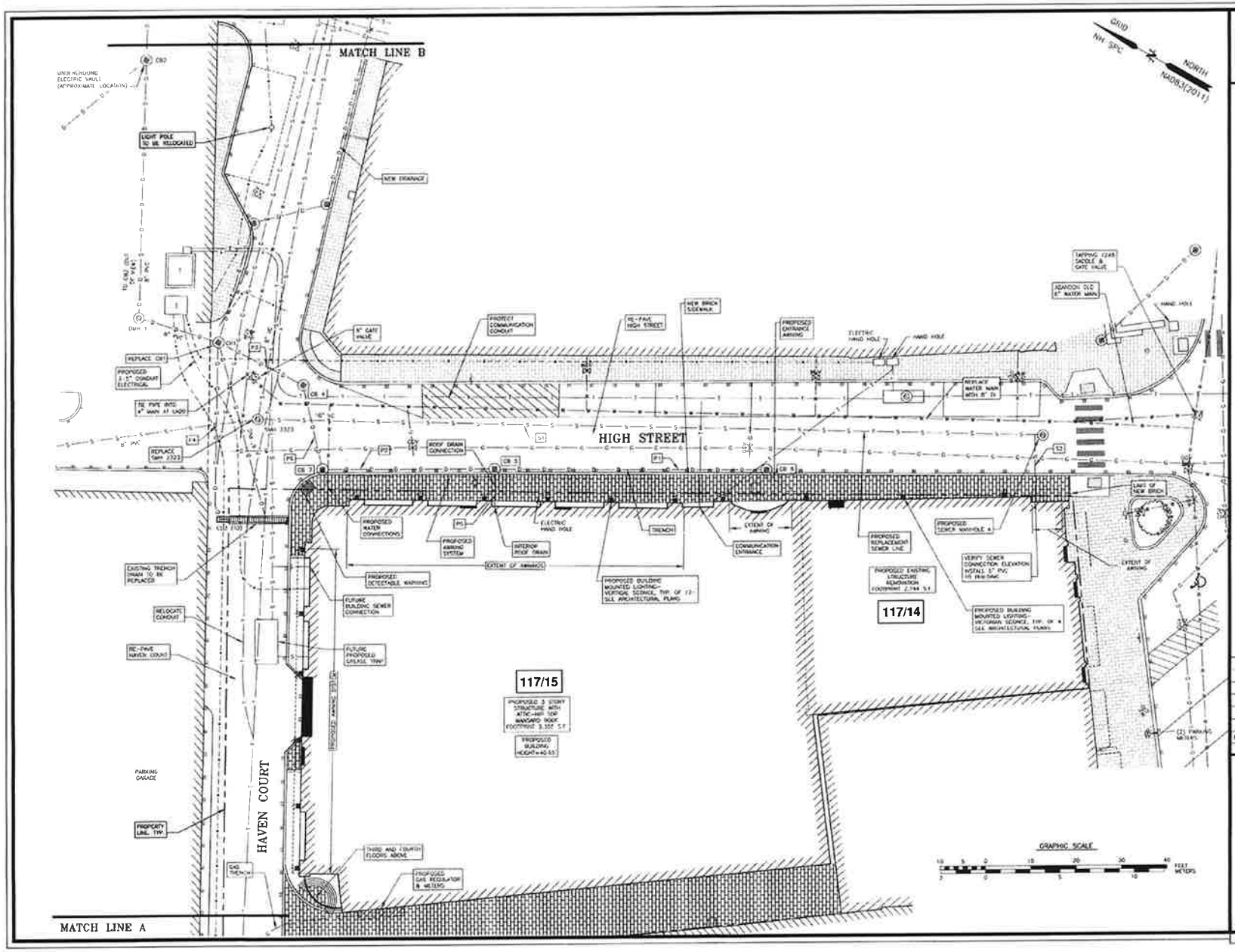

AMBIT ENGINEERING, INC.
Civil Engineers & Land Surveyors
200 Griffin Road - Unit 3
Portsmouth, NH 03801-7414
Tel (603) 430-9282
Fax (603) 436-7518

NOTES:

1) THE CONGRESS DEVELOPMENT PARCEL IS SHOWN ON THE CITY OF PORTSMOUTH ASSESSORS MAP 117 AS LOT 14.

2) OWNER OF RECORD (MAP 117 LOT 14)
ONE MARKET SQUARE, LLC
3 PLEASANT STREET, SUITE 400
PORTSMOUTH, NH 03801
6363/31 PARCEL 1 & PARCEL 2

3) THE PURPOSE OF THIS PLAN IS TO SHOW CONCEPTUAL UTILITY IMPROVEMENTS ASSOCIATED WITH THE IMPROVEMENT PLANS

HIGH STREET

NO	DESCRIPTION	DATE
0	ISSUED FOR COMMENT	7/3/23

REVISIONS

PROPOSED UTILITIES WORK AREA

OWNER OF RECORD:

THE CITY OF PORTSMOUTH
HIGH STREET, LADD STREET & HAVEN COURT
CITY OF PORTSMOUTH
COUNTY OF ROCKINGHAM
STATE OF NEW HAMPSHIRE

SCALE 1" = 20'
JUNE 2023
FB 309 PG 15
5010156 3406

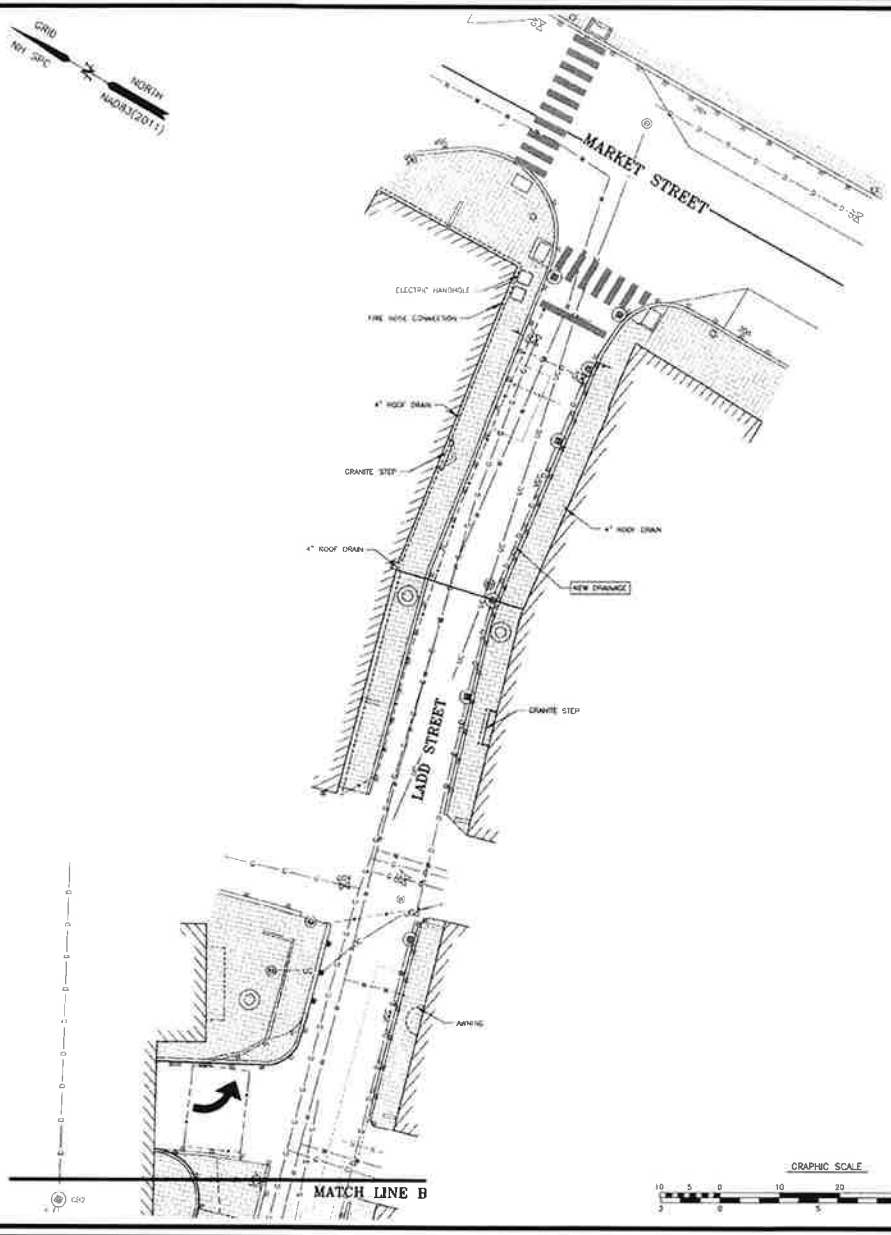

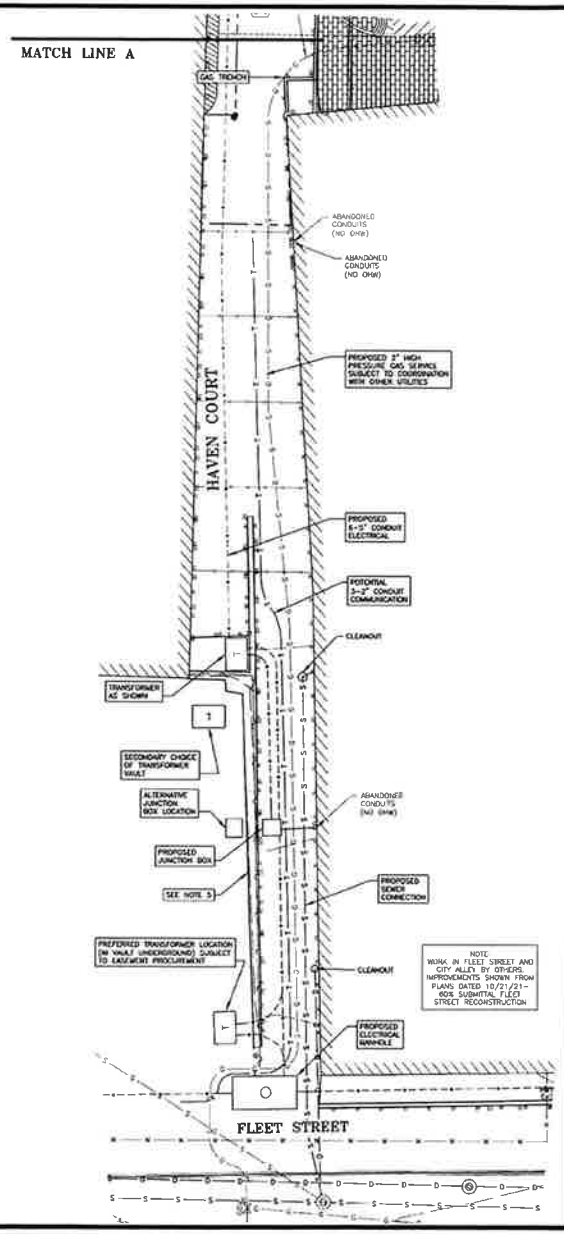

GRAPHIC SCALE

10 5 0 10 20 30 40 FEET
3 2 1 0 5 10 METERS

AMBIT ENGINEERING, INC.
Civil Engineers & Land Surveyors
209 Cutlers Road - Unit 2
Portsmouth, N.H. 03801-7344
Tel (603) 430-9282
Fax (603) 436-2315

NOTES:

1) 1 CONGRESS DEVELOPMENT PARCEL IS SHOWN ON THE CITY OF PORTSMOUTH ASSESSORS MAP 117 AS LOT 14.

2) OWNER OF RECORD (MAP 117 LOT 14):
ONE MARKET SQUARE, LLC
3 PLEASANT STREET, SUITE 400
PORTSMOUTH, NH 03801
6363/31 PARCEL 1 & PARCEL 2

3) THE PURPOSE OF THIS PLAN IS TO SHOW CONCEPTUAL UTILITY IMPROVEMENTS ASSOCIATED WITH THE IMPROVEMENT PLANS

4) WORK IN FLEET STREET AND CITY ALLEY BY OTHERS. IMPROVEMENTS SHOWN FROM PLANS DATED 10/21/21- 60% SUBMITTAL FLEET STREET RECONSTRUCTION

5) RETAINING WALL TO BE REBUILT IF NEEDED. COORDINATE WITH ABUTTING LANDOWNER

LADD STREET & HAVEN COURT

NO.	DESCRIPTION	DATE
0	ISSUED FOR COMMENT	7/3/23

REVISIONS

PROPOSED UTILITIES WORK AREA

THE CITY OF PORTSMOUTH

HIGH STREET, LADD STREET & HAVEN COURT
CITY OF PORTSMOUTH
COUNTY OF ROCKINGHAM
STATE OF NEW HAMPSHIRE

SCALE 1" = 20' JUNE 2023

FB 309 PG 15 5010156 3406

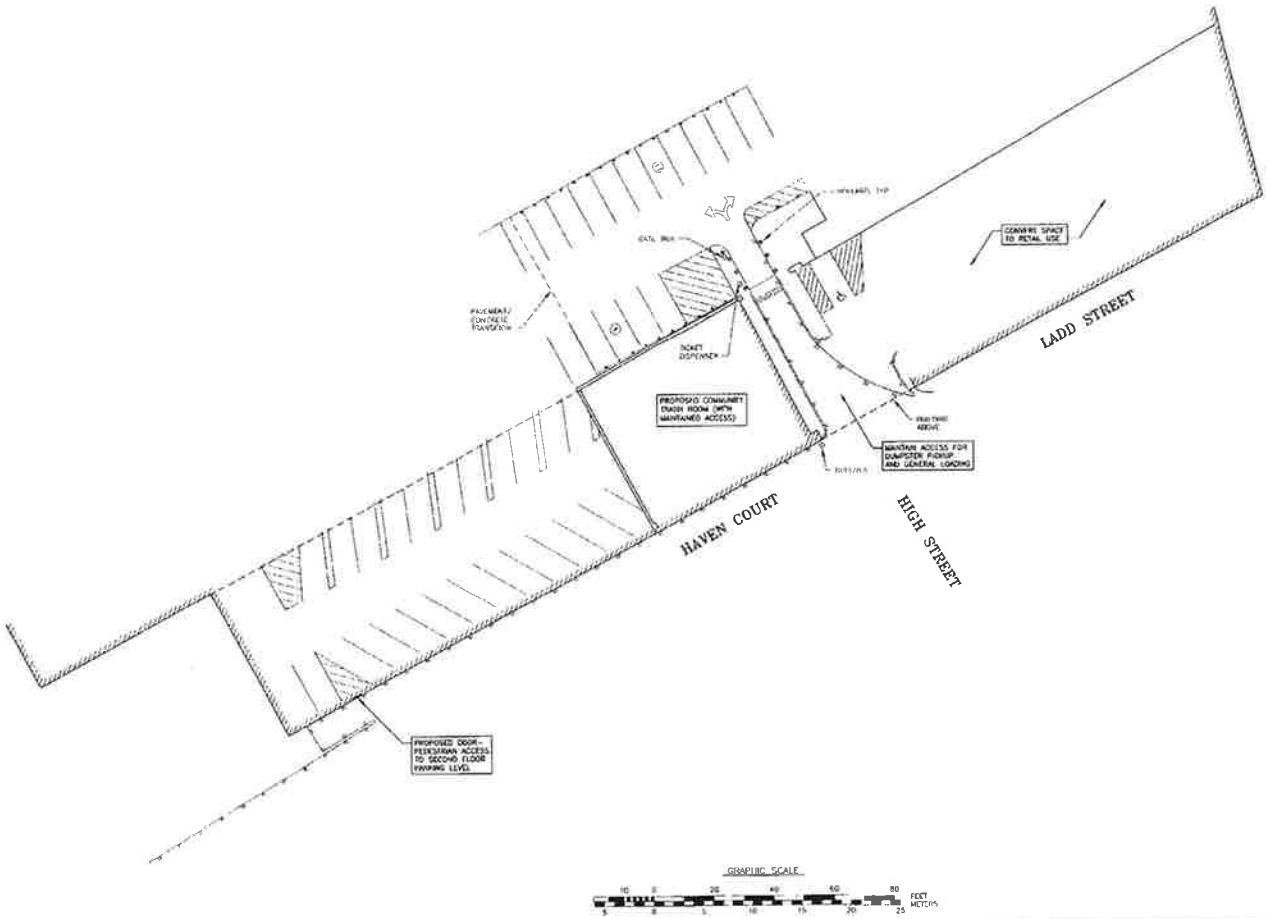

NORTH
MAGNETIC
TRUE
CIRC

AMBIT ENGINEERING, INC.
Civil Engineers & Land Surveyors
200 Griffin Road - Unit 8
Portsmouth, N.H. 03801-7114
Tel (603) 430-9282
Fax (603) 436-2315

NO.	DESCRIPTION	DATE
0	ISSUED FOR COMMENT	7/3/23

REVISIONS

PROPOSED CHANGES TO HIGH HANOVER PARKING GARAGE

THE CITY OF PORTSMOUTH
HIGH STREET, LADD STREET & HAVEN COURT
CITY OF PORTSMOUTH
COUNTY OF ROCKINGHAM
STATE OF NEW HAMPSHIRE

SCALE 1" = 40'
JUNE 2023
FB 309 PG 15
5010156 3408

2023.12.08 MOU City of Portsmouth High Ladd Haven Court

Final Audit Report 2023-12-13

Created:	2023-12-12
By:	Marie Bodi (marie@mcnabbgroup.com)
Status:	Signed
Transaction ID:	CBJCHBCAABAAZeCY6mXWFOzTGZ8QIP6abNR8GnZwv41q

"2023.12.08 MOU City of Portsmouth High Ladd Haven Court" History

Document created by Marie Bodi (marie@mcnabbgroup.com)
2023-12-12 - 8:21:09 PM GMT- IP address: 23.30.130.149

Document emailed to tmccourt@cityofportsmouth.com for signature
2023-12-12 - 8:23:42 PM GMT

Email viewed by tmccourt@cityofportsmouth.com
2023-12-12 - 8:25:56 PM GMT- IP address: 100.27.34.37

Signer tmccourt@cityofportsmouth.com entered name at signing as Trevor P. McCourt
2023-12-12 - 8:33:13 PM GMT- IP address: 69.168.4.66

Document e-signed by Trevor P. McCourt (tmccourt@cityofportsmouth.com)
Signature Date: 2023-12-12 - 8:33:15 PM GMT - Time Source: server- IP address: 69.168.4.66

Document emailed to kconard@cityofportsmouth.com for signature
2023-12-12 - 8:33:19 PM GMT

Email viewed by kconard@cityofportsmouth.com
2023-12-12 - 8:34:19 PM GMT- IP address: 3.234.144.171

Signer kconard@cityofportsmouth.com entered name at signing as Karen S. Conard
2023-12-12 - 8:34:56 PM GMT- IP address: 50.224.228.202

Document e-signed by Karen S. Conard (kconard@cityofportsmouth.com)
Signature Date: 2023-12-12 - 8:34:58 PM GMT - Time Source: server- IP address: 50.224.228.202

Document emailed to Mark McNabb (house@mcnabbgroup.com) for signature
2023-12-12 - 8:35:02 PM GMT

Email viewed by Mark McNabb (house@mcnabbgroup.com)

2023-12-12 - 8:40:22 PM GMT- IP address: 172.225.237.132

Document e-signed by Mark McNabb (house@mcnabbgroup.com)

Signature Date: 2023-12-13 - 11:01:19 AM GMT - Time Source: server- IP address: 71.235.10.14

Agreement completed.

2023-12-13 - 11:01:19 AM GMT

Adobe Acrobat Sign

ADDENDUM I TO MEMORANDUM OF AGREEMENT

THIS FIRST ADDENDUM AGREEMENT ("Addendum I") is entered into this ___ day of November, 2024, between the One Market Square, LLC, a New Hampshire limited liability company, with an address of 3 Pleasant Street, Suite 400, Portsmouth, NH 03801 (the "Developer") and the City of Portsmouth, a New Hampshire municipality, with an address of 1 Junkins Avenue, Portsmouth, NH 03801 (the "City"). The Developer and the City may be collectively referred to herein as "the Parties".

WITNESSETH:

WHEREAS, the Developer and the City are parties to a certain Memorandum of Agreement, fully executed on December 13, 2023, describing the Parties rights, responsibilities and covenants relative to High Street, Ladd Street, Haven Court, and Developer's property located at 1 Congress Street (Tax Map/Lot 117/14), all in Portsmouth, New Hampshire (the "Agreement");

WHEREAS, the Developer has procured a draft plan titled "Lot Line Adjustment Plan Tax Map 117 Lots 14 &16, Owners of Record: One Market Square, LLC & City of Portsmouth, Property Located at: 1 Congress Street & 44 High Street, City of Portsmouth, County of Rockingham, State of New Hampshire", prepared by Haley Ward and dated May 30, 2024 (the "Plan");

WHEREAS, the City is the owner of a strip of property located adjacent to Fleet Street, which is more completely described in a Quitclaim Deed from Wenberry Associates LLC recorded at the Rockingham County Registry of Deeds (the "Registry") on December 5, 2006 and at Book 4741, Page 797, and is shown on the Plan as the "Land to be Conveyed to One Market Square, LLC" (the "City Strip")

WHEREAS, the Developer is the owner of certain real property located at 1 Congress Street in the city of Portsmouth, located at Tax Map/Lot 117/14 ("1 Congress");

WHEREAS, the Developer acquired the fee interest in Haven Court from the edge of 1 Congress Street through to the edge of the City Strip a certain Quitclaim Deed, recorded at the Registry at Book 6523, Page 34 on December 14, 2023, from F. Thomas Critchley, Jr. (the "Remainder Parcel");

WHEREAS, the City owns a parking garage known as the High Hanover Garage, located on parcels at 34 Hanover Street and 44 High Street, Map/Lots 117/1 and 117/16, respectively (collectively the "High Hanover Garage");

WHEREAS, the Developer believes a portion of the High Hanover Garage is encroaching on the Remainder Parcel;

DRAFT

WHEREAS, the Developer desires to acquire the City Strip, and to incorporate the City Strip and the Remainder Parcel into the Public Realm Improvements as described in the Agreement to Haven Court from Fleet Street through to High Street;

WHEREAS, the City is amendable to conveying the City Strip to the Developer in exchange for a conveyance of any fee interest owned by the Developer under the High Hanover Garage, along with easements within Haven Court from High Street to Fleet Street for public access and utilities;

WHEREAS, the area including the City Strip, the Remainder Parcel, and the area shown on the Plan as Haven Court may be renamed by the Developer, but for the purposes of the Agreement and this Addendum I, shall be referred to collectively herein as "Haven Court"; and,

WHEREAS, in addition to the obligations described in the Agreement, the Parties desire for the Developer, at its sole cost, to design, engineer and construct certain public realm improvements within Haven Court from High Street to Fleet Street (together with the Public Realm Improvements as defined in the Agreement the "Expanded Public Realm Improvements").

NOW, THEREFORE, the Parties agree as follows:

Part I: The Developer's Obligations:

A. <u>The Expanded Public Realm Improvements</u>
   1. The Developer shall, at its sole cost and obligation design, engineer and install the Expanded Public Realm Improvements in accordance with the terms and conditions contained within the Agreement and the Addendum I. This provision shall include, but be in no way limited to, the provisions of Part 1, Section (A)(7) relating to referral to the Public Art Review Committee.
   2. Following its acquisition of the City Strip, the Developer shall convey to the City easements for public access and utilities within Haven Court, as well as a ten (10) foot easement adjacent to the High Hanover garage for maintenance.
   3. Following its acquisition of the City Strip, the Developer shall convey appropriate easements to the City for repair, access and maintenance of the High Hanover Garage.
   4. Following its acquisition of the City Strip, the Developer and the City shall execute a boundary line agreement pursuant to RSA 472:4 or a lot line adjustment resulting in the boundary shown on the Plan as "Land to be Conveyed to the City of Portsmouth".
   5. Following the completion of the conveyances described herein, the Developer shall assume all cost and liability for the maintenance of Haven Court from Fleet Street to High Street.

Part II: The City's Obligations:

DRAFT

1. The City shall convey the City Strip to the Developer by Quitclaim Deed.
2. The City Council, by its vote of November 18, 2024, delegated to the City Manager the right and authority to negotiate, execute, deliver, accept, and record any and all legal documents necessary to implement the transactions described under the City's Obligations and the Developer's Obligations.

For the City of Portsmouth

_____
Karen S. Conard, City Manager
Dated:_____
Pursuant to vote of the City Council
On November 18, 2024.

For the Developer: One Market Square, LLC

Signature: _____
Dated: _____
Printed Name: Mark A. McNabb, Manager

DRAFT

November 18, 2024

NEX-2400328.00

Mr. Rick Chellman, Planning Board Chair
City of Portsmouth
1 Junkins Avenue
Portsmouth, NH 03801

SUBJECT: Application for Parking Conditional Use Permit (CUP) Approval
Tax Map 117, Lots 12 – 15, #1 & 15 Congress Street

Dear Mr. Chellman and Planning Board members:

On behalf of One Market Square, LLC, Greenman-Pedersen Inc. (GPI) hereby applies for a Parking Conditional Use Permit (CUP) for the redevelopment of the site at #1 & #15 Congress Street. The existing mixed-used use buildings are proposed for redevelopment to provide a total of ±8,430 square feet (SF) of office space, ±24,320 SF of retail space, ±9,140 SF of restaurant space, and 40 residential apartment units. As the site is located within the City's Downtown Overlay District, parking for the proposed office, restaurant, and retail spaces is anticipated to occur within on-street parking spaces and in area public parking garages and lots. Parking for the proposed residential units will be provided in a basement-level parking garage to contain a total of 21 vehicle parking spaces and 36 bicycle parking spaces.

The Applicant has made best efforts to renovate and retrofit the existing buildings on the site. As such, the number of on-site parking spaces that can be provided within the below-ground parking garage is limited by the size of the existing surface lot on Parcel 14 and foundations for the existing buildings on site. The Applicant has maximized the number of vehicle parking spaces to be provided within the underground lot with the introduction of a vehicle elevator. Areas of the underground garage that cannot accommodate vehicle turning maneuvers are proposed for bicycle parking to offset the deficit in vehicle parking spaces within the garage. The site is located in a dense multi-use urban area with immediate access to numerous multi-modal travel opportunities, including walking, biking, and public transit services. In addition, the site is located in close proximity to other land uses for employment, shopping, and entertainment for residents of the proposed apartments, reducing the need to own a vehicle. The provision of 36 bicycle parking spaces within secured, weather-protected parking areas will further reduce the need for residents to own vehicles.

The City's zoning ordinance requires a total of 53 parking spaces on the site to accommodate the proposed 40 residential units, resulting in a deficit of 32 parking spaces. Since 21 vehicle parking spaces are being provided on the site, this request is to provide twenty-one (21) parking spaces where fifty-three (53) are required. A detailed parking demand assessment was performed as part of the *Traffic Impact Assessment* (TIA)[1] that is attached to this letter for reference.

We submit that the application conforms to the Portsmouth Ordinance Sections, repeated below with comments in **bold** text, as follows:

> <u>Section 10.1112.141:</u> An application for a conditional use permit under this section shall include a parking demand analysis demonstrating that the proposed number of off-street parking spaces is sufficient for the proposed use. **The parking demand assessment contained in the attached *Traffic Impact Assessment* indicates that the proposed residential units are anticipated to generate a peak parking demand of 28 parking spaces based on Institute of Transportation Engineers (ITE) parking demand generation rates for similar uses in dense multi-use urban settings. The provision of 36 bicycle parking spaces is anticipated to decrease the vehicle parking demand to 22 parking spaces, resulting in deficit of**

[1] *Traffic Impact Assessment, #1 & 15 Congress Street – Portsmouth, New Hampshire*; prepared by Greenman-Pedersen, Inc.; dated November 18, 2024.

only one parking space on-site for the proposed residential uses. This additional vehicle can easily be accommodated within one of the seven (7) public parking lots and garages that are located within 2,000 feet (10-minute walk) of the site.

Section 10.1112.142: An application for a conditional use permit under this section shall identify permanent evidence-based measures to reduce parking demand, including but not limited to provision of rideshare/micro transit services or bike share station(s) servicing the property, proximity to public transit, car/van-pool incentives, alternative transit subsidies, provisions for teleworking, and shared parking on a separate lot subject to the requirements of 10.1112.62. **The location of the proposed residential units is within a dense urban core and in close proximity to numerous opportunities for employment, shopping, and entertainment within walking distance. In addition, the site is located approximately 200 feet from the Hanover Station where bus transportation is provided along seven (7) bus routes by COAST (Cooperative Alliance for Seacoast Transportation). A stop is also provided on Congress Street at Market Square, less than 100 feet from the building entrance, for COAST Bus Routes 4, 40, and 41. The Applicant will provide 36 bicycle parking spaces within the on-site underground parking garage for secure, weather-protected bicycle parking for residents to further promote alternative travel.**

Section 10.1112.143: The Planning Board may grant a conditional use permit only if it finds that the number of off-street parking spaces required or allowed by the permit will be adequate and appropriate for the proposed use of the property. In making this determination, the Board may accept, modify or reject the findings of the applicant's parking demand analysis. **The parking analysis provided in the *Traffic Impact Assessment* indicates that the proposed development will generate a peak parking demand of 28 parking spaces based on ITE parking demand generation rates. The provision of 36 bicycle parking spaces may reduce this parking demand by up to six spaces, resulting in a peak parking demand of 22 vehicle parking spaces. The proposed on-site parking garage will provide 21 vehicle parking spaces, resulting in a deficit of only one parking space based on ITE data. This additional vehicle can be accommodated within the adjacent Hanover Garage or within one of the other six public parking facilities located within 2,000 feet (10-minute walk) of the site. Further, the Applicant plans to market the proposed residential units to residents desiring a downtown location, close to amenities and public transit services. As such, many of the residents may not own vehicles, thus further reducing the anticipated parking demand.**

Section 10.1112.144: At its discretion, the Planning Board may require more off-street parking spaces than the minimum number requested by the applicant or may allow fewer spaces than the maximum number requested by the applicant. **The application requests approval as presented; the maximum available given the existing site configuration.**

Sincerely,

GREENMAN-PEDERSEN, INC.

Rebecca L. Brown, P.E.
Senior Project Manager
116 South River Road, Building B, Suite 1, Bedford, NH 03110

Enclosure(s)

cc: Mark McNabb, McNabb Properties
Tracy Kozak, Arcove Architects
John Chagnon, Ambit Engineering

TECHNICAL MEMORANDUM

REF: NEX-2200015.00

DATE: November 18, 2024

TO: Mr. Mark A. McNabb
McNabb Properties
3 Pleasant Street, Suite 400
Portsmouth, New Hampshire 03801

FROM: Ms. Rebecca L. Brown, P.E., Senior Project Manager

RE: Traffic Impact Assessment
#1 & 15 Congress Street – Portsmouth, New Hampshire

STATE OF NEW HAMPSHIRE
REBECCA L. BROWN
No. 12529
LICENSED
PROFESSIONAL ENGINEER

INTRODUCTION

Greenman-Pedersen, Inc. (GPI) has prepared this *Traffic Impact Assessment* (TIA) for a proposed mixed-use redevelopment located at #1 & 15 Congress Street in Portsmouth, New Hampshire. The site is comprised of two lots on Tax Map 117, Parcels 12 - 15. Parcels 12 and 13 (#15 Congress Street) currently contain a mixed-use building with approximately 11,630 square feet (SF) of restaurant space and 3,430 SF of retail space on the first floor and basement levels, and 35,290 SF of office space and two residential apartment unit on the upper levels. Parcel 14 currently contains a 4-story mixed-use building with retail and restaurant space on the first floor and office and apartment space on the upper floors. Parcel 15 contains a private parking locate. Parcels 14 and 15 (#1 Congress Street) were previously approved for a redevelopment project consisting of renovating a portion of the existing building on Parcel 14 and constructing a 4-story addition to encompass the remainder of Parcels 14 and 15, and constructing basement-level parking. Access to the parking lot was proposed to be provided via a driveway on Haven Court to a vehicle elevator for access to the basement level. Upon completion, the Project was proposed to provide ±8,025 SF of retail space on the first floor, ±8,312 SF of office space on the second floor and a total of 18 residential units on the upper floors. The project has since been modified to include the redevelopment of both #1 and #15 Congress Street. As part of the Project, the space within the building at #15 Congress Street will be converted to approximately ±12,785 SF of retail space, ±8,665 SF of restaurant space and 22 residential apartment units. The redevelopment of #1 Congress Street has also been modified to include extending a portion of the building to connect to the existing JJ Newberry building at #15 Congress Street. Upon completion, #1 Congress Street will provide ±8,430 SF of office space, ±475 SF of restaurant space, ±11,535 SF of retail space, and 18 residential apartment units. Access to the underground parking lot will still be provided via a driveway on Haven Court, which will be extended to Fleet Street and converted to a pedestrian walkway.

This TIA provides a preliminary assessment of the potential vehicular traffic and parking demand to be generated by the proposed redevelopment, and a review of the safety of the roadways providing access/egress for the redevelopment.

The site is bounded by Haven Court to the north, Congress Street to the south, High Street to the east, and Fleet Street to the west. The site location in relation to the surrounding roadways is shown on the map on Figure 1.

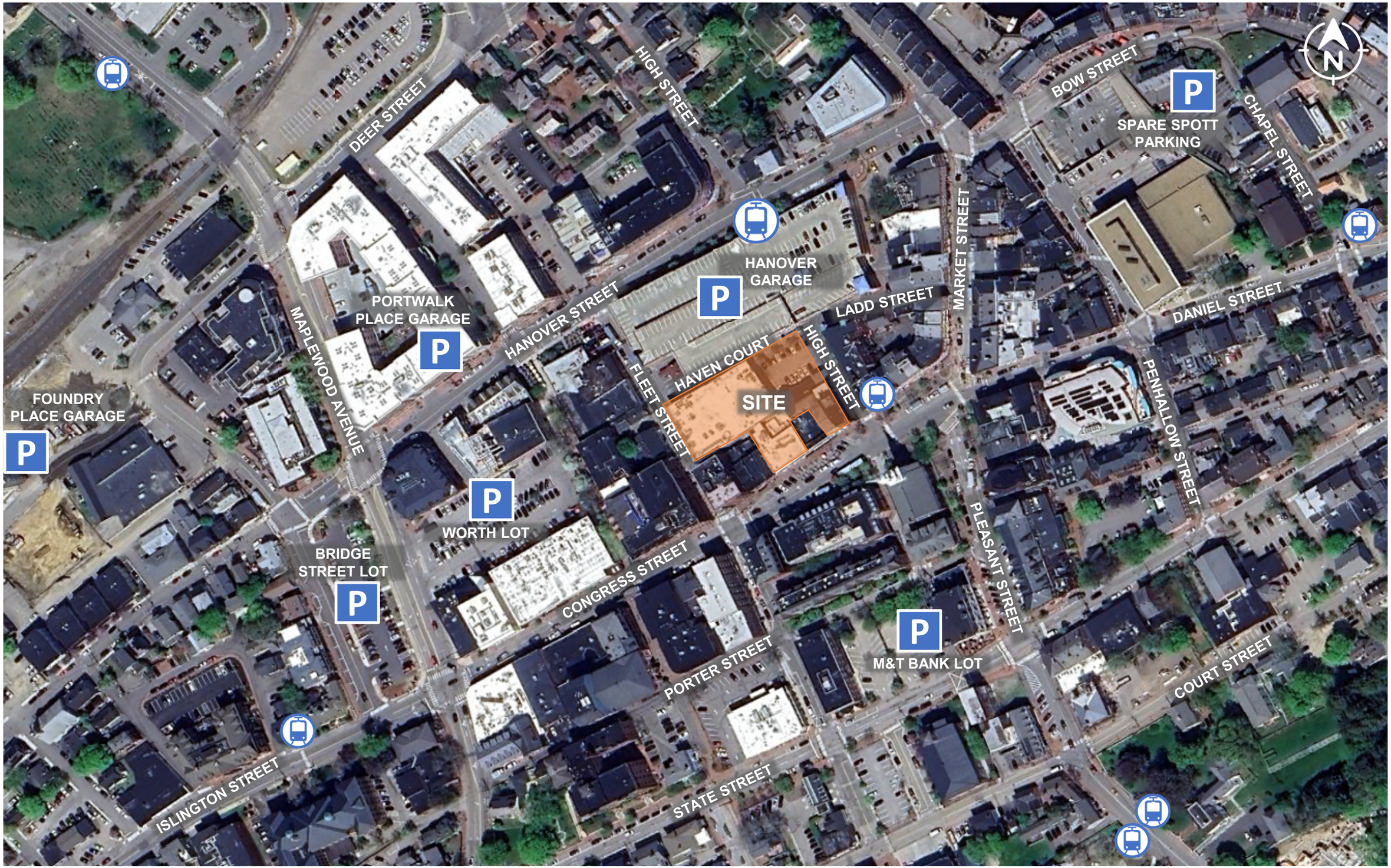

GPI Greenman-Pedersen, Inc. || 181 Ballardvale Street, Suite 202, Wilmington, MA 01887

#1 & 15 MARKET STREET – PORTSMOUTH, NEW HAMPSHIRE

FIGURE 1 – SITE LOCATION MAP

COLLISIONS

Collision data for the section of Congress Street between Market Square and Fleet Street, as well as along High Street, Haven Court, Ladd Street, and Fleet Street, were obtained from NHDOT for the latest complete three years available (2015-2017). A summary of the crashes at this intersection is provided in Table 1. The detailed crash history is provided in the Appendix.

Based on the collision data, the section of Congress Street between Market Square and Fleet Street experienced an average of 5.0 collisions per year over the three-year study period. Of the 15 crashes, three were single-vehicle crashes with a light pole and may have involved vehicles striking the light poles immediately adjacent to the angled parking spaces along the northerly side of Congress Street. Five of the collisions involved a collision with a pedestrian, three of which occurred late at night when visibility of pedestrians in the roadway may have been a factor. Only one of the pedestrian crashes occurred at the intersection with High Street and involved a pedestrian crossing outside of the crosswalk at night.

The section of Fleet Street between Congress Street and Hanover Street experienced an average of 2.0 collisions per year over the three-year study period. One of the collisions occurred with a parked vehicle near the intersection with Congress Street under dark conditions. Two of the collisions occurred late night in front of Gilley's Diner and an additional three collisions occurred in the evening at the driveway with Gilley's Diner. Fleet Street near Gilley's Diner is a narrow two-way roadway with a total 27-foot roadway width consisting of a 7.5-ft parking lane, a 10-ft southbound travel-lane and a 9.5-ft northbound travel-lane. The narrow roadway width, combined with parking along the west side of the roadway makes turning maneuvers in and out of Gilley's Diner parking lot difficult. In addition, the Hanover Street Garage and J.J. Newberry Buildings are located immediately adjacent to the roadway on either side of the parking lot for Gilley's Diner, and block sight lines for vehicles backing out of the parking spaces at Gilley's Diner.

There were no collisions reported along Haven Court, High Street, or Ladd Street over the three-year study period.

TABLE 1
Collision Summary

Location	Number of Collisions		Severity [a]				Collision Type [b]					Percent During	
	Total	Average per Year	PD	PI	F	NR	VEH	PED	FO	SV	U	Commuter Peak [c]	Wet/Icy Conditions [d]
Congress Street from Market Square to Fleet Street	15	5.0	11	4	--	--	7	5	3	--	--	20%	20%
Haven Court	0	0.0	--	--	--	--	--	--	--	--	--	0%	0%
High Street	0	0.0	--	--	--	--	--	--	--	--	--	0%	0%
Ladd Street	0	0.0	--	--	--	--	--	--	--	--	--	0%	0%
Fleet Street from Congress Street to Hanover Street	6	2.0	5	1	--	--	5	--	1	--	--	0%	0%

Source: NHDOT (2015-2017).

[a] PD = property damage only; PI = personal injury; F = fatality, NR = not reported.

[b] VEH = collision with another motor vehicle; PED = pedestrian / bicycle; FO = fixed object; SV = single vehicle; U = unknown.

[c] Percent of vehicle incidents that occurred during the weekday AM (7:00 AM-9:00 AM) and weekday PM (4:00 PM -6:00 PM) commuter peak periods.

[d] Represents the percentage of only “known” collisions occurring during inclement weather conditions.

TRIP GENERATION

The site at #1 Congress Street currently contains approximately 1,180 SF of retail space and 5,500 SF of restaurant space on the first floor, with an additional 2,720 SF of office space and 10 residential units on the upper floors. The site at #15 Congress Street currently contains 11,630 square feet (SF) of restaurant space , 3,430 SF of retail, 35,290 SF of office space and two residential units. Upon completion, the Project will provide a total of ±8,430 SF of office space, ±24,320 SF of retail space, ±9,140 SF of restaurant space, and 40 residential apartment units. GPI utilized trip-generation rates published by the Institute of Transportation Engineers (ITE) *Trip Generation Manual, 11th Edition*[1] for Land Use Code (LUC) 221 (Multi-family Housing (Mid-Rise)), LUC 710 (General Office Building), LUC 822 (Strip Retail Plaza <40k)), and LUC 932 (High Turnover Sit-Down Restaurant) to estimate the trips generated by the proposed uses.

The Project will be located in downtown Portsmouth, in close proximity to multiple retail, restaurant, office, residential, and entertainment uses for sharing of trips between uses. As a result, many of the trips generated by the site will be walking and biking trips. In addition, the site is located in close proximity to multiple bus routes, allowing for easy access to public transportation for access to/from the site. Therefore, the trip rates for the residential (LUC 221), office (LUS 710), and retail (LUC 822) uses were based on Dense Multi-Use Urban settings. ITE does not provide trip generation data within dense multi-use urban settings for restaurant uses, therefore, the trip rates for the restaurant uses were based on General Urban / Suburban settings. The resulting trip generation estimate is summarized in Table 2, and the detailed calculations are provided in the Appendix.

TABLE 2 – Proposed Trip Generation Summary

Time Period/Direction	Residential Trips (LUC 221) [a]	Office Trips (LUC 710) [b]	Retail Trips (LUC 822) [c]	Restaurant Trips (LUC 932) [d]	Total Trips [e]
Weekday Daily	118	56	824	980	**1,978**
Weekday AM Peak Hour:					
Enter	2	6	22	48	**78**
Exit	9	1	14	39	**63**
Total	11	7	36	87	**141**
Weekday PM Peak Hour:					
Enter	7	1	50	51	**109**
Exit	3	6	50	32	**91**
Total	10	7	100	83	**200**
Saturday Daily	78	12	1,648	1,118	**2,856**
Saturday Midday Peak Hour:					
Enter	6	0	64	52	**122**
Exit	5	1	62	50	**118**
Total	11	1	126	102	**240**

[a] ITE LUC 221 (Multi-family Housing (Mid-Rise)) in Dense Multi-Use Urban setting for 41 units.
[b] ITE LUC 710 (General Office Building) in Dense Multi-Use Urban setting for 8,430 SF
[c] ITE LUC 822 (Strip Retail Plaza (<40K)) in Dense Multi-Use Urban setting for 24,320 SF.
[d] ITE LUC 932 (High Turnover Sit-Down Restaurant) in General Urban / Suburban setting for 9,140 SF.
[e] Sum of Residential Trips, Office Trips, and Retail Trips.

[1] *Trip Generation Manual*, 11th Edition; Institute of Transportation Engineers; Washington, DC; September 2021.

As previously noted, the site currently contains a mix of residential, office, retail, and restaurant space that is currently generating traffic. Therefore, not all of the site-generated trips will be new to the area. GPI has estimated the trips generated by the former uses on the site based on ITE trip rates for LUC 221 (Multifamily Housing (Mid-Rise)), LUC 710 (General Office), LUC 822 (Strip Retail Plaza <40k)), LUC 931 (Fine-Dining Restaurant), and LUC 932 (High Turnover Sit-Down Restaurant). The trip rates for the office (LUC 710), retail (LUC 822) and residential (LUC 221) uses were based on Dense Multi-Use Urban settings, while the trip rates for the restaurant (LUC 931 and LUC 932) use were based on General Urban/Suburban settings due to the lack of available trip generation data within dense multi-use urban settings for this use. The resulting trip generation estimate is summarized in Table 3, and the detailed calculations are provided in the Appendix.

TABLE 3 – Existing Trip Generation Summary

Time Period/Direction	Residential Trips (LUC 221) [a]	Office Trips (LUC 710) [b]	Retail Trips (LUC 822) [c]	Restaurant Trips (LUC 931) [d]	Total Trips [e]
Weekday Daily	36	248	156	1,708	**2,148**
Weekday AM Peak Hour:					
Enter	0	28	4	63	**95**
Exit	3	4	2	52	**61**
Total	3	32	6	115	**156**
Weekday PM Peak Hour:					
Enter	2	5	9	93	**109**
Exit	1	28	9	55	**93**
Total	3	33	18	148	**202**
Saturday Daily	24	50	312	1,920	**2,306**
Saturday Midday Peak Hour:					
Enter	2	0	12	101	**115**
Exit	1	6	12	88	**107**
Total	3	6	24	189	**222**

[a] ITE LUC 221 (Multifamily Housing (Mid-Rise)) in Dense Multi-Use Urban setting for 12 dwelling units.
[b] ITE LUC 710 (General Office Building) in Dense Multi-Use Urban setting for 38,010 SF.
[c] ITE LUC 822 (Strip Retail Plaza (<40K)) in Dense Multi-Use Urban setting for 4,610 SF.
[d] Sum of ITE LUC 931 (Fine-Dining Restaurant) in General Urban/Suburban setting for 5,500 SF and ITE LUC 932 (High Turnover Sit-Down Restaurant) in General Urban/Suburban setting for 11,630 SF.
[e] Sum of Residential Trips, Office Trips, Retail Trips, and Restaurant Trips.

Table 4 provides a comparison of the trips generated by the proposed land uses to the trips generated by the former uses on the site.

TABLE 4 – Trip Generation Comparison

Time Period/Direction	Existing Trips [a]	Proposed Trips [b]	Net Increase in Trips [c]
Weekday Daily	2,148	1,978	**-170**
Weekday AM Peak Hour:			
Enter	95	78	**-17**
Exit	61	63	**2**
Total	156	141	**-15**
Weekday PM Peak Hour:			
Enter	109	109	**0**
Exit	93	91	**-2**
Total	202	200	**-2**
Saturday Daily	2,306	2,856	**550**
Saturday Midday Peak Hour:			
Enter	115	122	**7**
Exit	107	118	**11**
Total	222	240	**18**

[a] Total Existing Trips (From Table 3).
[b] Total Proposed Trips (From Table 4).
[c] Proposed Trips minus Existing Trips.

As shown in Table 4, the proposed redevelopment will result in a minimal increase in vehicle trips of 18 additional trips (7 entering and 11 exiting) during the Saturday midday peak hour. These increases in traffic volumes represent less than one additional vehicle every three minutes on downtown roadways and are anticipated to result in negligible impacts to traffic operations downtown. The proposed redevelopment will result in a net reduction in overall weekday daily trips and trips during the weekday AM and PM peak hours.

PARKING

As part of the project, a total of 21 car parking spaces and 36 bicycle parking spaces will be provided in the basement level parking structure for use by the residents. No on-site parking will be provided for the proposed retail and restaurant uses.

The site is located within the Downtown Overlay District, in close proximity to numerous municipal parking garages and on-street public parking. Based on Section 10.1115.21 of the Zoning Ordinance, non-residential uses within the Downtown Overlay District are not required to provide any parking. Therefore, no on-site parking will be provided for the proposed retail and restaurant uses. It is assumed that the office, retail and restaurant employees will walk, bike, or use public transit to work or park in the adjacent Hanover Street parking garage. Similarly, it is assumed that retail and restaurant patrons will either park in one of the municipal parking lots or utilize on-street parking spaces in the area.

Residential Parking

Section 10.1112.311 of the City of Portsmouth Zoning Ordinance requires:

- 0.5 parking spaces per unit for residential dwellings of less than 500 SF;
- 1.0 parking spaces per unit for residential dwellings of between 500 SF and 750 SF; and
- 1.3 parking spaces per unit for residential dwellings of greater than 750 SF.

The Project proposes to include a total of 2 units with 500-750 SF, and 38 units greater than 750 SF. Therefore, a total of 51.4 parking spaces are required to serve the proposed residential units.

In addition, Section 10.1112.312 of the Zoning Ordinance states that:

"In addition to the off-street parking spaces provided in accordance with Sec. 10.1112.311, any dwelling or group of dwellings on a lot containing more than 4 dwelling units shall provide one visitor parking space for every 5 dwelling units or portion thereof."

Therefore, a total of 8.0 visitor parking spaces would be required to meet zoning regulations, which would result in a total of 59.4 parking spaces required for the residential use.

The Project is located within Downtown Overlay District. Section 10.1115.23 of the Zoning Ordinance allows for a 4-space reduction from the requirements of Section 10.1115.21 for any uses located within the Downtown Overlay District. Applying this reduction would result in a total parking requirement of 55.4 parking spaces.

The Zoning Ordinance also allows for a reduction in parking requirements of 1.0 parking spaces for every six (6.0) bicycle parking spaces with a maximum reduction of 5 percent. As 36 bicycle parking spaces are proposed on the site, a reduction of up to six vehicle parking spaces could be applied. However, the reduction is limited to a maximum of 5 percent of the total parking requirement or 2.77 spaces. Therefore, a total of 53 parking spaces would be required to serve the proposed residential units based on the Zoning Ordinance.

As the proposed parking supply of 21 vehicle parking spaces will result in a deficit of 32 parking spaces as compared to the Zoning Ordinance requirement, a Conditional Use Permit will be required for this project for parking.

ITE Parking Demand Data

To assess the adequacy of the proposed parking supply to accommodate the parking demand generated by the proposed residential units, GPI reviewed parking demand generation rates contained in the ITE publication *Parking Generation Manual, 6th Edition*. ITE provides separate parking demand generation rates for studio and 1-bedroom units as compared to units with 2 or more bedrooms. Within a dense multi-use urban setting, studio and 1-bedroom units generate a peak parking demand of 0.28 spaces per unit based on Land Use Code (LUC) 218 (Multifamily Housing – 1 BR (Mid-Rise)). Similarly, within a dense multi-use urban setting, units with 2 or more bedrooms generate a peak parking demand of 0.93 spaces per unit based on LUC 221 (Multifamily Housing – 2+ BR (Mid-Rise)).

There are a total of 14 apartment units proposed as studio or one-bedroom units and 26 units proposed with 2 or more bedrooms. Therefore, the proposed residential development is anticipated to generate a peak parking demand of 28 parking spaces based on ITE parking demand data. As the development is proposed to provide 21 parking spaces, the proposed parking supply will result in a deficit of 7 vehicle parking spaces based on ITE parking demand data. These additional parking spaces can be accommodated within the adjacent Hanover Garage or other area parking garages. As shown in Figure 1,

there are seven public parking garages / lots withing 2,000 feet (10-minute walk) of the site, providing more than adequate parking for any overflow from the proposed on-site garage. In addition, the provision of 36 bicycle parking spaces is anticipated to offset the parking deficit based on the City's Zoning Ordinance that allows for a reduction in vehicle parking spaces of one space for every six bicycle parking spaces provided.

CONCLUSIONS

- The site is comprised of four lots on Tax Map 117, Parcels 12 - 15. Parcel 14 currently contains a 4-story mixed-use building with retail and restaurant space on the first floor and office and apartment space on the upper floors. Parcel 15 contains a private parking locate. Parcels 12 and 13 contain a mixed-use building with retail and restaurant space on the first and basement levels and office and apartment space on the upper levels. The project consists of renovating a portion of the existing building on Parcel 14 and constructing a 4-story addition to encompass the remainder of Parcels 14 and 15, and constructing basement-level parking. In addition, the building on Parcels 12 – 13 will be redeveloped to convert a substantial portion of the office space to retail space and residential apartment units. Access to the parking lot would be provided via a driveway on Haven Court to a vehicle elevator for access to the basement level. Upon completion, the Project would provide ±8,430 SF of office space, ±24,320 SF of retail space, ±9,140 SF of restaurant space, and 40 residential apartment units.

- The section of Congress Street between Market Square and Fleet Street experienced an average of 5.0 collisions per year over the three-year study period. Of the 15 crashes, three were single-vehicle crashes with a light pole and may have involved vehicles striking the light poles immediately adjacent to the angled parking spaces along the northerly side of Congress Street. Five of the collisions involved a collision with a pedestrian, three of which occurred late at night when visibility of pedestrians in the roadway may have been a factor. Only one of the pedestrian crashes occurred at the intersection with High Street and involved a pedestrian crossing outside of the crosswalk at night. The occurrence of collisions with pedestrians at night may be an indication that the crosswalk is not adequately lit due either to poor lighting or overgrown street trees blocking existing light poles.

- The section of Fleet Street between Congress Street and Hanover Street experienced an average of 2.0 collisions per year over the three-year study period. One of the collisions occurred with a parked vehicle near the intersection with Congress Street under dark conditions. Two of the collisions occurred late night in front of Gilley's Diner and an additional three collisions occurred in the evening at the driveway with Gilley's Diner. Fleet Street near Gilley's Diner is a narrow two-way roadway with a total 27-foot roadway width consisting of a 7.5-ft parking lane, a 10-ft southbound travel-lane and a 9.5-ft northbound travel-lane. The narrow roadway width, combined with parking along the west side of the roadway makes turning maneuvers in and out of Gilley's Diner parking lot difficult. In addition, the Hanover Street Garage and J.J. Newberry Buildings are located immediately adjacent to the roadway on either side of the parking lot for Gilley's Diner, and block sight lines for vehicles backing out of the parking spaces at Gilley's Diner.

- There were no collisions reported along Haven Court, High Street, or Ladd Street over the three-year study period.

- The proposed redevelopment will result in a minimal increase in vehicle trips of 18 additional trips (7 entering and 11 exiting) during the Saturday midday peak hour, which represents less than one additional vehicle every three minutes on downtown roadways and is anticipated to result in negligible impacts to traffic operations downtown. The proposed redevelopment will result in a net reduction in overall weekday daily trips and trips during the weekday AM and PM peak hours.

- A total of 21 vehicle parking spaces and 36 bicycle parking spaces are proposed within the basement level parking garage at #1 Congress Street. Based on the City's zoning regulations a total of 53 parking spaces would be required to serve the proposed residential uses within the Downtown Overlay District. Therefore, a Conditional Use Permit will be required to allow a reduction in parking supply for the proposed development. No on-site parking is required for office, retail and restaurant uses within the Downtown Overlay District.

- Although the zoning ordinance estimates a deficit of 32 vehicle parking spaces on the site, the proposed residential uses are anticipated to generate a peak parking demand of 28 parking spaces based on ITE parking demand generation rates for similar residential uses in dense multi-use urban settings. The proposed parking supply of 21 residential parking spaces will accommodate the majority of the parking demand. The additional seven vehicles can be accommodated within the adjacent Hanover Garage or other area parking facilities. In addition, the proposed 36 bicycle parking spaces will offset a 6-space deficit in vehicle parking spaces based on the City's zoning regulations allowing for a reduction in vehicle parking spaces of one space for every six bicycle parking spaces provided.

- APPENDIX

- ***NHDOT Crash Data***
- ***Trip Generation Calculations***

NHDOT CRASH DATA

FID	ACDYEAR_NU	CRASH_DATE	ACDDAY	ACDTIME	ACDSTREET	INTERSTREE	MILESFTFRO	NSEW_TO_IN	TYPE_OF_AC	FIXED_OBJE	LOCATION_F	NUMVEHICLE	TOTALFATAL	TOTALINJUR	PEDFATALS	PROPDAMAGE	INFONOTREP	SEVERITY	ROAD_ALIGN	ROAD_CONDI	SURFACE_CO	LIGHTING_D	WEATHER_DE	ROAD_DESIG	TRAFFIC_CO
414619	15009106	3/17/2015	TUE	2331	90 FLEET ST	62 CONGRESS ST	100	N	Parked Motor Vehicle		Intersection Related	2	0	0	0		X	Unknown	Straight and Level	Normal	Dry	Dark-Street Light On	Clear	Not Physically Divided (2 Way Traffic)	Visible Road Markings
466799	16009879	4/30/2016	SAT	1955	175 FLEET ST	HANOVER ST	150	S	Other Motor Vehicle		Along the Road	2	0	0	0		X	No Apparent Injury	Straight and Level	Normal	Dry	Dark-Street Light On	Clear	Not Physically Divided (2 Way Traffic)	Visible Road Markings
481652	16014951	6/27/2016	MON	1436	174 FLEET ST	HANOVER ST	100	S	Other Motor Vehicle		Along the Road	2	0	0	0		X	No Apparent Injury	Unknown	Normal	Dry	Daylight	Clear		None
483078	16019691	8/6/2016	SAT	120	175 FLEET ST		0		Other Motor Vehicle		Along Road at Driveway Access	1	0	0	0		X	Unknown	Straight and Level	Normal	Unknown	Dark-Street Light On	Unknown	Not Physically Divided (2 Way Traffic)	None
488681	16019675	8/4/2016	THU	53	175 FLEET ST		0		Other Motor Vehicle		Along the Road	2	0	1	0			Non-Incapacitating	Unknown	Normal	Dry	Dark-Street Light On	Clear		None
496398	16019655	8/20/2016	SAT	1453	175 FLEET ST		0		Other Motor Vehicle		Along the Road	2	0	0	0		X	No Apparent Injury	Straight and Level	Normal	Dry	Daylight	Clear	Not Physically Divided (2 Way Traffic)	None

FID	CRASH_DATE	ACDDAY	ACDTIME	ACDSTREET	INTERSTREE	MILESFTFR	NSEW_TO	TYPE_OF_AC	FIXED_OBJE	LOCATION_F	NUMVEHICLE	TOTALFATAL	TOTALINJUR	PEDFATALS	SEVERITY	ROAD_ALIGN	ROAD_CONDI	SURFACE_CO	LIGHTING_D	WEATHER_DE	TRAFFIC_CO
417934	6/22/2015	MON	1558	151 HIGH ST	HIGH ST AND DEER ST	150	E	Other Motor Vehicle		Along the Road	2	0	0	0	No Apparent Injury	Straight and Level	Normal	Dry	Daylight	Clear	Lane Control
434430	8/13/2015	THU	933	75 CONGRESS ST	FLEET ST	10	S	Fixed Object	Light Pole	Along the Road	1	0	0	0	Unknown	Straight and Level	Normal	Dry	Daylight	Clear	Visible Road Markings
455142	11/4/2015	WED	1443	1 DANIEL ST	1 MARKET SQ	0	AT	Pedestrian		At Intersection	1	0	1	0	No Apparent Injury	Other	Normal	Dry	Daylight	Clear	Stop Sign
466467	5/17/2016	TUE	1242	5 MARKET SQ	CONGRESS ST	10	N	Other Motor Vehicle		Along the Road	2	0	0	0	No Apparent Injury	Straight and Level	Normal	Dry	Daylight	Clear	Lane Control
488867	6/16/2016	TUE	2302	5 MARKET SQ	PLEASANT ST	0	AT	Pedestrian		Intersection Related	3	0	2	0	Non_Incapacitating	Straight and Level	Normal	Dry	Dark-Street Light On	Clear	Visible Road Markings
481938	7/17/2016	SUN	1444	62 CONGRESS ST	FLEET ST	20	W	Other Motor Vehicle		Unknown	2	0	0	0	No Apparent Injury	Unknown	Normal	Dry	Daylight	Clear	None
482191	7/19/2016	TUE	1356	10 PLEASANT ST	14 MARKET SQ	0	AT	Other Motor Vehicle		Along the Road	2	0	0	0	No Apparent Injury	Straight and Level	Normal	Dry	Daylight	Clear	None
482892	10/25/2016	TUE	1638	29 CONGRESS ST		0		Other Motor Vehicle		Unknown	2	0	0	0	Non_Incapacitating	Unknown	Normal	Dry	Daylight	Clear	Yield Sign
469157	11/8/2016	TUE	1934	14 MARKET SQ		0		Other Motor Vehicle		Along the Road	2	0	0	0	No Apparent Injury	Straight and Level	Normal	Dry	Daylight	Clear	Lane Control
499903	11/20/2016	SUN	1251	75 CONGRESS ST	FLEET ST	40	W	Pedestrian		Intersection Related	2	0	1	0	Non_Incapacitating	Straight and Level	Normal	Dry	Daylight	Clear	Traffic Signals
481331	12/8/2016	THU	2018	5 CONGRESS ST	HIGH ST	0	AT	Pedestrian		At Intersection	2	0	0	0	No Apparent Injury	Straight and Level	Normal	Dry	Dark-Street Light On	Clear	Visible Road Markings
469809	12/12/2016	MON	1612	40 PLEASANT ST		0		Other Motor Vehicle		Unknown	2	0	0	0	No Apparent Injury	Unknown	Normal	Dry	Dusk	Clear	None
479143	12/22/2016	THU	1426	8 CONGRESS ST		0		Fixed Object	Light Pole	At Intersection	1	0	0	0	No Apparent Injury	Unknown	Normal	Wet	Daylight	Snow	None
484255	12/24/2016	SAT	1	5 MARKET SQ	1 PLEASANT ST	0	AT	Pedestrian		Intersection Related	2	0	1	0	Possible	Straight and Level	Normal	Wet	Dark-Street Light On	Cloudy	Stop Sign
477050	3/28/2017	TUE	833	6 CONGRESS ST	1 CHURCH ST	0	AT	Fixed Object	Light Pole	Along the Road	1	0	0	0	Unknown	Straight and Level	Normal	Wet	Unknown	Cloudy	None

TRIP-GENERATION CALCULATIONS

Proposed Use	Size	Variable
Residential (LUC 221)	40	Units
Office (LUC 710)	8430	SF
Retail (LUC 822)	24320	SF
Restaurant (LUC 931)	0	SF
Restaurant (LUC 932)	9140	SF

Existing Uses	Size	Variable
Residential (LUC 221)	12	Units
Office (LUC 710)	38010	SF
Retail (LUC 822)	4610	SF
Restaurant (LUC 931)	5500	SF
Restaurant (LUC 932)	11630	SF

Time Period / Direction	Proposed Trips					First Floor Office					Net Change in Trips
	Office LUC 710	Residential LUC 221	Retail LUC 822	Restaurant LUC 930	Total Trips	Office LUC 710	Residential LUC 221	Retail LUC 822	Restaurant LUC 930	Total Trips	
Weekday Daily	56	118	824	980	1,978	248	36	156	1,708	2,148	-170
Weekday AM Peak Hour											
Enter	6	2	22	48	78	28	0	4	63	95	-17
Exit	1	9	14	39	63	4	3	2	52	61	2
Total	7	11	36	87	141	32	3	6	115	156	-15
Weekday PM Peak Hour											
Enter	1	7	50	51	109	5	2	9	93	109	0
Exit	6	3	50	32	91	28	1	9	55	93	-2
Total	7	10	100	83	200	33	3	18	148	202	-2
Saturday Daily	12	78	1,648	1,118	2,856	50	24	312	1,920	2,306	550
Saturday Midday Peak Hour											
Enter	0	6	64	52	122	0	2	12	101	115	7
Exit	1	5	62	50	118	6	1	12	88	107	11
Total	1	11	126	102	240	6	3	24	189	222	18

Institute of Transportation Engineers (ITE)

Land Use Code (LUC) 221 - Multifamily Housing (Mid-Rise)

Dense Multi-Use Urban

Average Vehicle Trips Ends vs: Dwelling Units

Independent Variable (X): 40

AVERAGE WEEKDAY DAILY

T = 2.93 * (X)
T = 2.93 * 40
T = 117.20
T = 118 vehicle trips
with 50% (59 vpd) entering and 50% (59 vpd) exiting.

WEEKDAY MORNING PEAK HOUR OF ADJACENT STREET TRAFFIC

T = 0.28 * (X)
T = 0.28 * 40
T = 11.20
T = 11 vehicle trips
with 14% (2 vph) entering and 86% (9 vph) exiting.

WEEKDAY EVENING PEAK HOUR OF ADJACENT STREET TRAFFIC

T = 0.26 * (X)
T = 0.26 * 40
T = 10.40
T = 10 vehicle trips
with 72% (7 vph) entering and 28% (3 vph) exiting.

SATURDAY DAILY

T = 1.95 * (X)
T = 1.95 * 40
T = 78.00
T = 78 vehicle trips
with 50% (39 vpd) entering and 50% (39 vpd) exiting.

SATURDAY PEAK HOUR OF GENERATOR

T = 0.27 * (X)
T = 0.27 * 40
T = 10.80
T = 11 vehicle trips
with 51% (6 vph) entering and 49% (5 vph) exiting.

Institute of Transportation Engineers (ITE)

Land Use Code (LUC) 710 - General Office Building

Dense Multi-Use Urban

Average Vehicle Trips Ends vs: 1000 Sq. Feet Gross Floor Area

Independent Variable (X): 8.430

AVERAGE WEEKDAY DAILY

$$\frac{\text{ITE LUC 710 Weekday Trip Rate (U)}}{\text{ITE LUC 710 Weekday Trip Rate (S)}} = \frac{\text{ITE LUC 710 Weekday Evening Trip Rate (U)}}{\text{ITE LUC 710 Weekday Evening Trip Rate (S)}}$$

$$\frac{(Y)}{10.84} = \frac{0.87}{1.44} \qquad Y = 6.55$$

T = Y * 8.430
T = 55.21
T = 56 vehicle trips
with 50% (28 vpd) entering and 50% (28 vpd) exiting.

WEEKDAY MORNING PEAK HOUR OF ADJACENT STREET TRAFFIC

T = 0.84 * (X)
T = 0.84 * 8.430
T = 7.08
T = 7 vehicle trips
with 87% (6 vph) entering and 13% (1 vph) exiting.

WEEKDAY EVENING PEAK HOUR OF ADJACENT STREET TRAFFIC

T = 0.87 * (X)
T = 0.87 * 8.430
T = 7.33
T = 7 vehicle trips
with 16% (1 vph) entering and 84% (6 vph) exiting.

SATURDAY DAILY

$$\frac{\text{ITE LUC 710 Saturday Trip Rate (U)}}{\text{ITE LUC 710 Saturday Trip Rate (S)}} = \frac{\text{ITE LUC 710 Weekday Evening Trip Rate (U)}}{\text{ITE LUC 710 Weekday Evening Trip Rate (S)}}$$

$$\frac{(Y)}{2.21} = \frac{0.87}{1.44} \qquad Y = 1.34$$

T = Y * 8.430
T = 1.34 * 8.430
T = 11.26
T = 12 vehicle trips
with 50% (6 vpd) entering and 32% (6 vpd) exiting.

SATURDAY PEAK HOUR OF GENERATOR

T = 0.17 * (X)
T = 0.17 * 8.430
T = 1.43
T = 1 vehicle trips
with 8% (0 vph) entering and 92% (1 vph) exiting.

Institute of Transportation Engineers (ITE)

Land Use Code (LUC) 822 - Strip Retail Plaza (<40k)

Dense Multi-Use Urban

Average Vehicle Trips Ends vs: 1000 Sq. Ft. Gross Floor Area

Independent Variable (X): 24.320

AVERAGE WEEKDAY DAILY

ITE LUC 821 (Dense Multi-Use Urban) Weekday PM Trip Rate / ITE LUC 821 (General Urban/Suburban) Weekday PM Trip Rate = ITE LUC 822 (Dense Multi-Use Urban) Weekday Daily Trip Rate / ITE LUC 822 (General Urban/Suburban) Weekday Daily Trip Rate

$$\frac{3.23}{5.19} = \frac{(Y)}{54.45} \qquad Y = 33.89$$

T = Y * 24.320

T = 824.20

T = 824 vehicle trips

with 500% (412 vpd) entering and 50% (412 vpd) exiting.

(same distribution split as ITE LUC 822 (General Urban/Suburban) during the Weekday Daily)

WEEKDAY MORNING PEAK HOUR OF ADJACENT STREET TRAFFIC

ITE LUC 821 (Dense Multi-Use Urban) Weekday PM Trip Rate / ITE LUC 821 (General Urban/Suburban) Weekday PM Trip Rate = ITE LUC 822 (Dense Multi-Use Urban) Weekday AM Trip Rate / ITE LUC 822 (General Urban/Suburban) Weekday AM Trip Rate

$$\frac{3.23}{5.19} = \frac{(Y)}{2.36} \qquad Y = 1.47$$

T = Y * 24.320

T = 35.75

T = 36 vehicle trips

with 60% (22 vpd) entering and 40% (14 vpd) exiting.

(same distribution split as ITE LUC 822 (General Urban/Suburban) during the Weekday AM)

WEEKDAY EVENING PEAK HOUR OF ADJACENT STREET TRAFFIC

ITE LUC 821 (Dense Multi-Use Urban) Weekday PM Trip Rate / ITE LUC 821 (General Urban/Suburban) Weekday PM Trip Rate = ITE LUC 822 (Dense Multi-Use Urban) Weekday PM Trip Rate / ITE LUC 822 (General Urban/Suburban) Weekday PM Trip Rate

$$\frac{3.23}{5.19} = \frac{(Y)}{6.59} \qquad Y = 4.10$$

T = Y * 24.320

T = 99.71

T = 100 vehicle trips

with 50% (50 vpd) entering and 50% (50 vpd) exiting.

(same distribution split as ITE LUC 822 (General Urban/Suburban) during the Weekday PM)

SATURDAY DAILY

ITE LUC 821 (General Urban/Suburban) Saturday Daily Trip Rate / ITE LUC 821 (General Urban/Suburban) Saturday Peak Hour Trip Rate = ITE LUC 822 (Dense Multi-Use Urban) Saturday Daily Trip Rate / ITE LUC 822 (Dense Multi-Use Urban) Saturday Peak Hour Trip Rate

$$\frac{81.07}{6.22} = \frac{(Y)}{5.20} \qquad Y = 67.78$$

T = Y * 24.320

T = 1648.41

T = 1,648 vehicle trips

with 50% (824 vpd) entering and 50% (824 vpd) exiting.

(same distribution split as ITE LUC 821 during the Saturday Daily)

SATURDAY PEAK HOUR OF GENERATOR

ITE LUC 821 (Dense Multi-Use Urban) Saturday Midday Trip Rate / ITE LUC 821 (General Urban/Suburban) Saturday Midday Trip Rate = ITE LUC 822 (Dense Multi-Use Urban) Saturday Midday Trip Rate / ITE LUC 822 (General Urban/Suburban) Saturday Midday Trip Rate

$$\frac{4.92}{6.22} = \frac{(Y)}{6.57} \qquad Y = 5.20$$

T = Y * 24.320

T = 126.46

T = 126 vehicle trips

with 51% (64 vpd) entering and 49% (62 vpd) exiting.

(same distribution split as ITE LUC 822 (General Urban/Suburban) during the Saturday Midday)

Institute of Transportation Engineers (ITE)

Land Use Code (LUC) 932 - High Turnover Sit-Down Restaurant

General Urban / Suburban

Average Vehicle Trips Ends vs: 1,000 Sq. Ft. Gross Floor Area

Independent Variable (X): 9.140

AVERAGE WEEKDAY DAILY

T = 107.2 * (X)
T = 107.20 * 9.140
T = 979.81
T = 980 vehicle trips
with 50% (490 vpd) entering and 50% (490 vpd) exiting.

WEEKDAY MORNING PEAK HOUR OF ADJACENT STREET TRAFFIC

T = 9.57 * (X)
T = 9.57 * 9.140
T = 87.47
T = 87 vehicle trips
with 55% (48 vph) entering and 45% (39 vph) exiting.

WEEKDAY EVENING PEAK HOUR OF ADJACENT STREET TRAFFIC

T = 9.05 * (X)
T = 9.05 * 9.140
T = 82.72
T = 83 vehicle trips
with 61% (51 vph) entering and 39% (32 vph) exiting.

SATURDAY DAILY

T = 122.40 * (X)
T = 122.40 * 9.140
T = 1118.74
T = 1,118 vehicle trips
with 50% (559 vpd) entering and 50% (559 vpd) exiting.

SATURDAY PEAK HOUR OF GENERATOR

T = 11.19 * (X)
T = 11.19 * 9.140
T = 102.28
T = 102 vehicle trips
with 51% (52 vph) entering and 49% (50 vph) exiting.

Institute of Transportation Engineers (ITE)

Land Use Code (LUC) 221 - Multifamily Housing (Mid-Rise)

Dense Multi-Use Urban

Average Vehicle Trips Ends vs: Dwelling Units

Independent Variable (X): 12

AVERAGE WEEKDAY DAILY

T = 2.93 * (X)
T = 2.93 * 12
T = 35.16
T = 36 vehicle trips
with 50% (18 vpd) entering and 50% (18 vpd) exiting.

WEEKDAY MORNING PEAK HOUR OF ADJACENT STREET TRAFFIC

T = 0.28 * (X)
T = 0.28 * 12
T = 3.36
T = 3 vehicle trips
with 14% (0 vph) entering and 86% (3 vph) exiting.

WEEKDAY EVENING PEAK HOUR OF ADJACENT STREET TRAFFIC

T = 0.26 * (X)
T = 0.26 * 12
T = 3.12
T = 3 vehicle trips
with 72% (2 vph) entering and 28% (1 vph) exiting.

SATURDAY DAILY

T = 1.95 * (X)
T = 1.95 * 12
T = 23.40
T = 24 vehicle trips
with 50% (12 vpd) entering and 50% (12 vpd) exiting.

SATURDAY PEAK HOUR OF GENERATOR

T = 0.27 * (X)
T = 0.27 * 12
T = 3.24
T = 3 vehicle trips
with 51% (2 vph) entering and 49% (1 vph) exiting.

Institute of Transportation Engineers (ITE)

Land Use Code (LUC) 710 - General Office Building

Dense Multi-Use Urban

Average Vehicle Trips Ends vs: 1000 Sq. Feet Gross Floor Area

Independent Variable (X): 38.010

AVERAGE WEEKDAY DAILY

$$\frac{\text{ITE LUC 710 Weekday Trip Rate (U)}}{\text{ITE LUC 710 Weekday Trip Rate (S)}} = \frac{\text{ITE LUC 710 Weekday Evening Trip Rate (U)}}{\text{ITE LUC 710 Weekday Evening Trip Rate (S)}}$$

$$\frac{(Y)}{10.84} = \frac{0.87}{1.44} \qquad Y = 6.55$$

T = Y * 38.010
T = 248.93
T = 248 vehicle trips
with 50% (124 vpd) entering and 50% (124 vpd) exiting.

WEEKDAY MORNING PEAK HOUR OF ADJACENT STREET TRAFFIC

T = 0.84 * (X)
T = 0.84 * 38.010
T = 31.93
T = 32 vehicle trips
with 87% (28 vph) entering and 13% (4 vph) exiting.

WEEKDAY EVENING PEAK HOUR OF ADJACENT STREET TRAFFIC

T = 0.87 * (X)
T = 0.87 * 38.010
T = 33.07
T = 33 vehicle trips
with 16% (5 vph) entering and 84% (28 vph) exiting.

SATURDAY DAILY

$$\frac{\text{ITE LUC 710 Saturday Trip Rate (U)}}{\text{ITE LUC 710 Saturday Trip Rate (S)}} = \frac{\text{ITE LUC 710 Weekday Evening Trip Rate (U)}}{\text{ITE LUC 710 Weekday Evening Trip Rate (S)}}$$

$$\frac{(Y)}{2.21} = \frac{0.87}{1.44} \qquad Y = 1.34$$

T = Y * 38.010
T = 1.34 * 38.010
T = 50.75
T = 50 vehicle trips
with 50% (25 vpd) entering and 32% (25 vpd) exiting.

SATURDAY PEAK HOUR OF GENERATOR

T = 0.17 * (X)
T = 0.17 * 38.010
T = 6.46
T = 6 vehicle trips
with 8% (0 vph) entering and 92% (6 vph) exiting.

Institute of Transportation Engineers (ITE)

Land Use Code (LUC) 822 - Strip Retail Plaza (<40k)

Dense Multi-Use Urban

Average Vehicle Trips Ends vs: 1000 Sq. Ft. Gross Floor Area

Independent Variable (X): 4.610

AVERAGE WEEKDAY DAILY

ITE LUC 821 (Dense Multi-Use Urban) Weekday PM Trip Rate / ITE LUC 821 (General Urban/Suburban) Weekday PM Trip Rate = ITE LUC 822 (Dense Multi-Use Urban) Weekday Daily Trip Rate / ITE LUC 822 (General Urban/Suburban) Weekday Daily Trip Rate

$$\frac{3.23}{5.19} = \frac{(Y)}{54.45} \qquad Y = 33.89$$

T = Y * 4.610

T = 156.23

T = 156 vehicle trips

with 500% (78 vpd) entering and 50% (78 vpd) exiting.

(same distribution split as ITE LUC 822 (General Urban/Suburban) during the Weekday Daily)

WEEKDAY MORNING PEAK HOUR OF ADJACENT STREET TRAFFIC

ITE LUC 821 (Dense Multi-Use Urban) Weekday PM Trip Rate / ITE LUC 821 (General Urban/Suburban) Weekday PM Trip Rate = ITE LUC 822 (Dense Multi-Use Urban) Weekday AM Trip Rate / ITE LUC 822 (General Urban/Suburban) Weekday AM Trip Rate

$$\frac{3.23}{5.19} = \frac{(Y)}{2.36} \qquad Y = 1.47$$

T = Y * 4.610

T = 6.78

T = 6 vehicle trips

with 60% (4 vpd) entering and 40% (2 vpd) exiting.

(same distribution split as ITE LUC 822 (General Urban/Suburban) during the Weekday AM)

WEEKDAY EVENING PEAK HOUR OF ADJACENT STREET TRAFFIC

ITE LUC 821 (Dense Multi-Use Urban) Weekday PM Trip Rate / ITE LUC 821 (General Urban/Suburban) Weekday PM Trip Rate = ITE LUC 822 (Dense Multi-Use Urban) Weekday PM Trip Rate / ITE LUC 822 (General Urban/Suburban) Weekday PM Trip Rate

$$\frac{3.23}{5.19} = \frac{(Y)}{6.59} \qquad Y = 4.10$$

T = Y * 4.610

T = 18.90

T = 18 vehicle trips

with 50% (9 vpd) entering and 50% (9 vpd) exiting.

(same distribution split as ITE LUC 822 (General Urban/Suburban) during the Weekday PM)

SATURDAY DAILY

ITE LUC 821 (General Urban/Suburban) Saturday Daily Trip Rate / ITE LUC 821 (General Urban/Suburban) Saturday Peak Hour Trip Rate = ITE LUC 822 (Dense Multi-Use Urban) Saturday Daily Trip Rate / ITE LUC 822 (Dense Multi-Use Urban) Saturday Peak Hour Trip Rate

$$\frac{81.07}{6.22} = \frac{(Y)}{5.20} \qquad Y = 67.78$$

T = Y * 4.610

T = 312.47

T = 312 vehicle trips

with 50% (156 vpd) entering and 50% (156 vpd) exiting.

(same distribution split as ITE LUC 821 during the Saturday Daily)

SATURDAY PEAK HOUR OF GENERATOR

ITE LUC 821 (Dense Multi-Use Urban) Saturday Midday Trip Rate / ITE LUC 821 (General Urban/Suburban) Saturday Midday Trip Rate = ITE LUC 822 (Dense Multi-Use Urban) Saturday Midday Trip Rate / ITE LUC 822 (General Urban/Suburban) Saturday Midday Trip Rate

$$\frac{4.92}{6.22} = \frac{(Y)}{6.57} \qquad Y = 5.20$$

T = Y * 4.610

T = 23.97

T = 24 vehicle trips

with 51% (12 vpd) entering and 49% (12 vpd) exiting.

(same distribution split as ITE LUC 822 (General Urban/Suburban) during the Saturday Midday)

Institute of Transportation Engineers (ITE)

Land Use Code (LUC) 931 - Fine Dining Restaurant

General Urban / Suburban

Average Vehicle Trips Ends vs: 1,000 Sq. Ft. Gross Floor Area

Independent Variable (X): 5.500

AVERAGE WEEKDAY DAILY

T = 83.84 * (X)
T = 83.84 * 5.500
T = 461.12
T = 462 vehicle trips
with 50% (231 vpd) entering and 50% (231 vpd) exiting.

WEEKDAY MORNING PEAK HOUR OF ADJACENT STREET TRAFFIC

T = 0.73 * (X)
T = 0.73 * 5.500
T = 4.02
T = 4 vehicle trips
with 55% (2 vph) entering and 45% (2 vph) exiting.
(same distribution split as ITE LUC 932 during the Weekday AM)

WEEKDAY EVENING PEAK HOUR OF ADJACENT STREET TRAFFIC

T = 7.80 * (X)
T = 7.8 * 5.500
T = 42.90
T = 43 vehicle trips
with 67% (29 vph) entering and 33% (14 vph) exiting.

SATURDAY DAILY

T = 90.04 * (X)
T = 90.04 * 5.500
T = 495.22
T = 496 vehicle trips
with 50% (248 vpd) entering and 50% (248 vpd) exiting.

SATURDAY PEAK HOUR OF GENERATOR

T = 10.68 * (X)
T = 10.68 * 5.500
T = 58.74
T = 59 vehicle trips
with 59% (35 vph) entering and 41% (24 vph) exiting.

Institute of Transportation Engineers (ITE)

Land Use Code (LUC) 932 - High Turnover Sit-Down Restaurant

General Urban / Suburban

Average Vehicle Trips Ends vs: 1,000 Sq. Ft. Gross Floor Area
Independent Variable (X): 11.630

AVERAGE WEEKDAY DAILY

T = 107.2 * (X)
T = 107.20 * 11.630
T = 1246.74
T = 1,246 vehicle trips
with 50% (623 vpd) entering and 50% (623 vpd) exiting.

WEEKDAY MORNING PEAK HOUR OF ADJACENT STREET TRAFFIC

T = 9.57 * (X)
T = 9.57 * 11.630
T = 111.30
T = 111 vehicle trips
with 55% (61 vph) entering and 45% (50 vph) exiting.

WEEKDAY EVENING PEAK HOUR OF ADJACENT STREET TRAFFIC

T = 9.05 * (X)
T = 9.05 * 11.630
T = 105.25
T = 105 vehicle trips
with 61% (64 vph) entering and 39% (41 vph) exiting.

SATURDAY DAILY

T = 122.40 * (X)
T = 122.40 * 11.630
T = 1423.51
T = 1,424 vehicle trips
with 50% (712 vpd) entering and 50% (712 vpd) exiting.

SATURDAY PEAK HOUR OF GENERATOR

T = 11.19 * (X)
T = 11.19 * 11.630
T = 130.14
T = 130 vehicle trips
with 51% (66 vph) entering and 49% (64 vph) exiting.

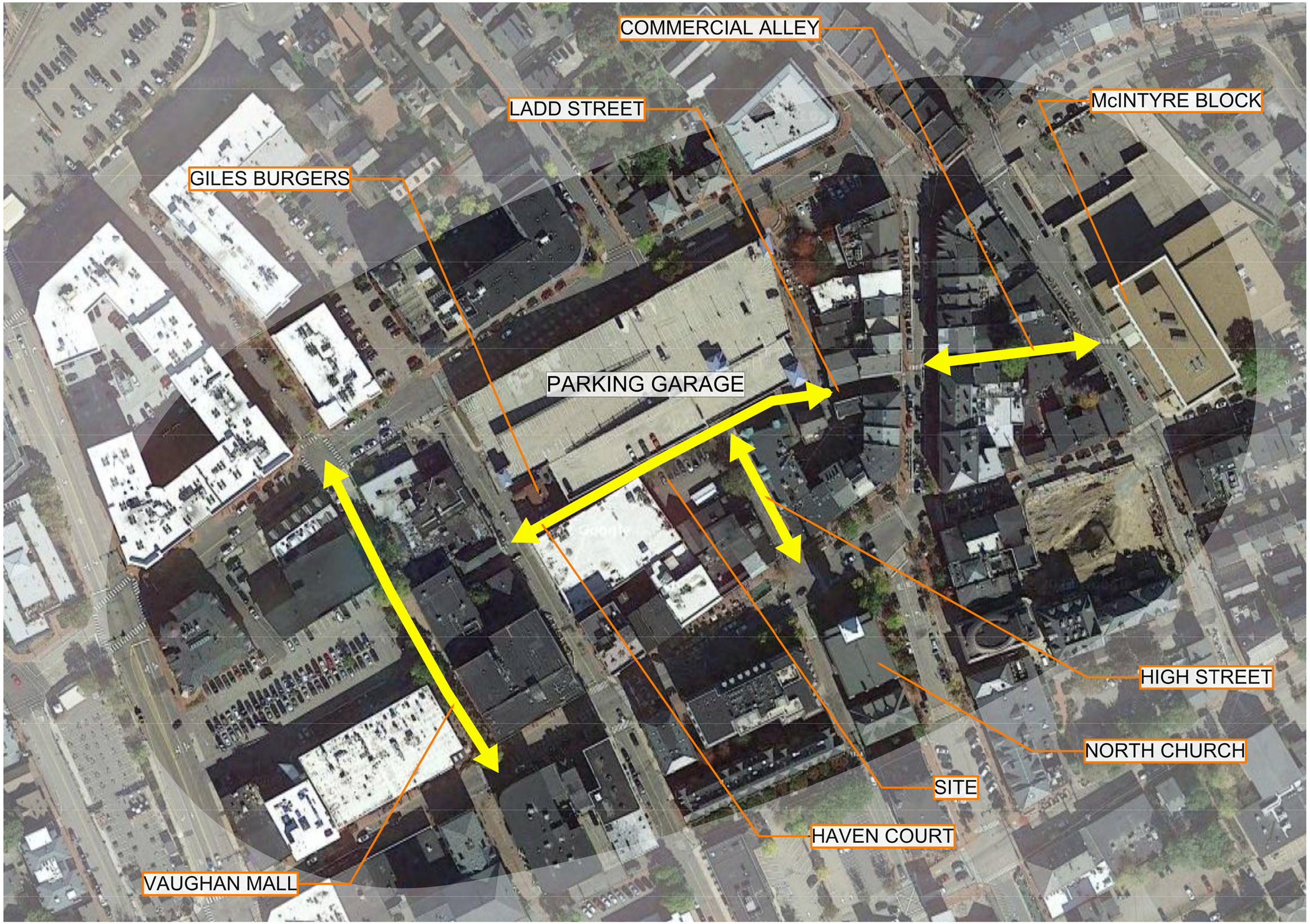

ARCOVE ARCHITECTS
3 Congress St, Ste 1
Portsmouth, NH 03801
T 603.731.5187
arcove.com

Ambit Engineering Inc
Civil Engineering
200 Griffin Rd Unit 3
Portsmouth NH 03801
(603) 430-9282
ambitengineering.com

Terra Firma Landscape
Landscape Architecture
163a Court St
Portsmouth NH 03801
(603) 531-9109
terrafirmalandarch.com

1 CONGRESS STREET

1 CONGRESS STREET & HIGH STREET
PORTSMOUTH, NH 03801

ONE MARKET SQUARE LLC, OWNER

Scale:
Date: 02/16/2022
Project Number: 1002

REVISIONS		
NO.	DESCRIPTION	DATE

CONCEPT DESIGN

CONTEXT MAP

PC.02

COPYRIGHT © 2022

2/16/2022 9:19:42 AM E:\Users\Admin\Documents\1MS central 2022-01-25_Tracy.kozak.rvt

1

2

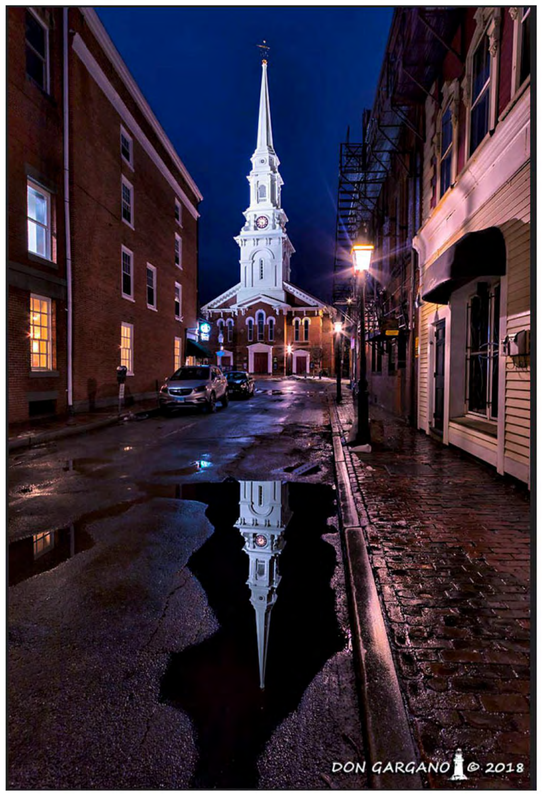

3

4

6

5

7

ARCOVE ARCHITECTS
3 Congress St, Ste 1
Portsmouth, NH 03801
T 603.731.5187
arcove.com

Ambit Engineering Inc
Civil Engineering
200 Griffin Rd Unit 3
Portsmouth NH 03801
(603) 430-9282
ambitengineering.com

Terra Firma Landscape
Landscape Architecture
163a Court St
Portsmouth NH 03801
(603) 531-9109
terrafirmalandarch.com

1 CONGRESS STREET

1 CONGRESS STREET & HIGH STREET
PORTSMOUTH, NH 03801

ONE MARKET SQUARE LLC, OWNER

Scale:
Date: 02/16/2022
Project Number: 1002

REVISIONS		
NO.	DESCRIPTION	DATE

CONCEPT DESIGN

EXISTING CONDITIONS - CONTEXT

PC.03

COPYRIGHT © 2022

2/16/2022 7:04:45 AM E:\Users\Admin\Documents\1MS central 2022-01-25_Tracy.kozak.rvt

1-15 Congress Street

Site Plan Review 11-18-2024

Green Building Statement

WATER

- Protect water quality – Eliminate surface parking lot.
- Conserve Water -- Target 30% reduction in fixtures water use over building code, meeting EPACT 2005.

ENERGY

- Conserve Energy – Basis of Design to Target 50% Energy Use Index (EUI = 32) reduction over code compliance (IECC 2018) in combined attached existing and new buildings. Use early energy modeling to analyze effective scenarios. Provide high performance thermal envelope. Achieve Energy Star certification and associated rebates. Use Heat Recovery for ventilation.
  Commission energy using systems. LED lighting throughout. See attached engineering report and preliminary energy model summary for additional details.
- Renewable Energy – Rooftop Solar Photovoltaic system for portion of building's energy needs.
- Building Performance -- Use industry tools to annually monitor and benchmark buildings. Train staff on proper building operation with comprehensive Facilities Staff Training and Systems Manuals.
- Reduce Low level ozone (smog) -- Provide safe and secure bicycle storage. Use only low-VOC products for construction and operation.

MATERIALS & RESOURCES

- Minimize waste (during construction and operation)
- Use regional, renewable, low carbon footprint materials

INDOOR ENVIRONMENTAL QUALITY

- Thermal comfort -- Meet ASHRAE 55 Thermal Comfort Code. Address thermal envelope per above. Provide multiple zones of heating and cooling in each apartment.
- Indoor air quality (before and during occupancy) -- MEET ASHRAE 62 Ventilation Code in all occupied spaces. MEET LEED IEQ credit requirements.
- Views / connection to outdoors -- Provide views to outdoors for every regularly occupied space.
- Daylighting -- Achieve Daylight Factor of 2% minimum for every regularly occupied space.
- Individual controls (light, heat etc…) -- Provide individual controls for temperature and lighting.

HALEY WARD

STORMWATER MANAGEMENT PLAN

TO THE CITY OF PORTSMOUTH
FOR 1-15 CONGRESS STREET MIXED USE DEVELOPMENT

APPLICANT:

ONE MARKET SQUARE, LLC
3 Pleasant Street, Suite 400
Portsmouth, NH 03801

STATE OF NEW HAMPSHIRE
DREW JOHN OLEHOWSKI
No. 18515
LICENSED
PROFESSIONAL ENGINEER

11/15/24

NOVEMEBR 18, 2024
JN: 5010156.3406

REPORT PREPARED BY:
Haley Ward, Inc.
120 Main Street, Suite 132 | Saco, ME 04072

STORMWATER MANAGEMENT PLAN
1-15 CONGRESS STREET, PORTSMOUTH, NH
MIXED-USED DEVELOPMENT

EXECUTIVE SUMMARY

This Stormwater Management Plan has been prepared for the proposed Mixed-Use Development located at 1-15 Congress Street, in accordance the City of Portsmouth's Site Plan Review Ordinance, specifically, sections 2.5.4 and 7.4.

This analysis examines the pre-development (existing) and post-development (proposed) stormwater drainage patterns for the Mixed-Use Development at the properties known as 1 and 15 Congress Street in Portsmouth, NH. The site is shown on the City of Portsmouth Assessor's Tax Map 117 as Lots 14 and 16 and includes portions of the public ways identified as Haven Court, High Street, and Ladd Street. The total size of the associated drainage analysis area is 46,633± square-feet (1.07 acres.) The total Lot area for the subject properties is 41,933± square-feet (0.96 acres.) Please refer to the cover letter associated with this project's full Site Plan Permit Application for a more detailed description of the development.

Per Section 7.4.2 of the Site Plan Review ordinance, enhanced stormwater treatment standards are required for Redevelopment projects that will disturb greater than 15,000 square feet and are located on a lot with an existing impervious surface coverage greater than 40%. This development meets these thresholds and is therefore required to Implement LID or stormwater treatment BMPs that will disconnect and/or treat at least 30% of the existing impervious cover and 100% of any additional proposed impervious surfaces or paved areas preferably using filtration and/or infiltration practices; or, implement LID or stormwater treatment measures to disconnect or treat at least 60% of the entire developed area.

The development will provide for a new commercial building and redevelopment of adjacent road/sidewalk areas. The development has the potential to increase stormwater pollutants to City infrastructure, and therefore must be designed in a manner to prevent that occurrence. This will be done primarily by capturing stormwater runoff and routing it through appropriate stormwater facilities, designed to ensure that there will be no increase in pollutants from the site as a result of this project.

The hydrologic modeling utilized for this analysis uses the "Extreme Precipitation" values for rainfall from The Northeast Regional Climate Center (Cornell University), with a 15% increase to comply with local ordinance.

INTRODUCTION / PROJECT DESCRIPTION

This drainage report is designed to assist the owner, contractor, regulatory reviewer, and others in understanding the impact of the proposed development project on local surface water runoff and quality. The project site is shown on the City of Portsmouth, NH Assessor's Tax Map 117 as Lots 14 and 16. Bounding the site to the north is Haven Court. Bounding the site to the east is High Street. Bounding the site to the South is Congress Street. Bounding the site to the west is Fleet Street.

The proposed development will include a commercial building infill, building renovation, and the redevelopment of the adjacent sections of Haven Court (to be re-named Newberry Way), Ladd Street, and High Street. This report includes information about the existing site and the proposed expansion necessary to analyze stormwater runoff and to design any required mitigation. The report includes maps of pre-development and post-development watersheds, subcatchment areas and calculations of runoff. The report will provide a narrative of the stormwater runoff and describe numerically and graphically the surface water runoff patterns for this site.

Proposed stormwater management methods will also be described, as well as erosion and sediment control practices (Erosion Control Plan/Inspection and Maintenance Plans provided as separate document within this Site Plan Permit application.) To fully understand the proposed site development the reader should also review a complete site plan set in addition to this report.

Project construction is expected to commence in Spring 2025 and will be completed by Late 2026. Erosion control devices will be in place prior to any site disturbance. Changes in onsite grading will be limited to the proposed work on Newberry Way; this work is expected to be completed as a part of the proposed building construction at 1 Congress.

METHODOLOGY

"Extreme Precipitation" values from The Northeast Regional Climate Center (Cornell University) have been used for modeling purposes. These values have been used in this analysis, with a 15% addition to comply with local ordinances. The unadjusted table is appended to this report.

This report uses the US Soil Conservation Service (SCS) Method for estimating stormwater runoff. The SCS method is published in The National Engineering Handbook (NEH), Section 4 "Hydrology" and includes the Technical Release No. 20, (TR-20) "Computer Program for Project Formulation Hydrology", and Technical Release No. 55 (TR-55) "Urban Hydrology for Small Watersheds" methods. This report uses the HydroCAD

version 10.20 program, written by HydroCAD Software Solutions LLC, Chocorua, N.H., to apply these methods for the calculation of runoff and for pond modeling. Rainfall data and runoff curve numbers are taken from "The Stormwater Management and Erosion Control Handbook for Urban and Developing Areas in New Hampshire." Time of Concentration (Tc) is calculated by entering measured flow path data such as flow path type, length, slope and surface characteristics into the HydroCAD program. For the purposes of this report, a minimum time of concentration of 5 minutes is used. The storm events used for the calculations in this report are the 2-year, 10-year, 25-year, and 50-year (24-hour) storms. Watershed basin boundaries have been delineated using topographic maps prepared by Ambit Engineering / Haley Ward and field observations to confirm.

SITE SPECIFIC INFORMATION

Based on the United States Department of Agriculture (USDA) Natural Resources Conservation Service (NRCS), Soil Survey of Rockingham County, New Hampshire the site is made up of one soil type:

Soil Symbol	Soil Name and Slopes
699	Urban Land

Urban Land does not have any recorded geological features, including depth to bedrock or depth to water table. The Hydraulic Soil Grade is assumed to be Type D.

The physical characteristics of the site not containing buildings consist of gently sloped (0- 8%) grades. Elevations on the site range from 18 to 32 feet above sea level. The existing site is developed with multi-story commercial buildings and associated parking.

According to the Federal Emergency Management Agency (FEMA) Flood Insurance Rate Map (FIRM) number 33015C0259F (effective date January 29, 2021), the proposed development is located in Zone X and is determined to be outside of the 0.2% annual chance floodplain. A copy of the FIRM map is included with this report.

The site and its surrounding areas are entirely developed; there are no wetlands, water bodies, or other natural resources directly adjacent to the site.

PRE-DEVELOPMENT DRAINAGE

In the pre-development condition, the site has been analyzed as four subcatchment basins based on localized topography, discharge location and ownership. While Only Subcatchments 1 and (a portion) of 3 will be modified by the proposed development, all areas described below are under common ownership, and their inclusion in this analysis will provide ease of analysis for potential future development of these areas.

Subcatchment 1 contains the existing parking lot which abuts the existing building at 1 Congress Street to the north, as well as the western half of Haven Court. These areas discharge as surface flow to a trench drain/catch basin system at the intersection of Haven Court and High Street. These inlets direct runoff to the public storm drain on Ladd Street, which discharges to the east towards Market Street (Summation Point 1.)

Subcatchment 2 represents the roof of the existing building at 1 Congress Street, whose runoff is collected via roof drain and discharged to the public system on High Street, which ultimately discharges towards Ladd Street (Summation Point 1,) as Subcatchment 1 does.

Subctachment 3 represents the westerly half of Haven Court, as well as the parcel identified as Map 117 Lot 8. Runoff from these areas is directed as surface flow to the public subsurface system on Fleet Street (Summation Point 2.)

Subcatchment 4 represents the roof of the existing building at 15 Fleet Street, which is discharged via roof drains to the public system on Fleet Street (Summation Point 2.)

All the pre-development analysis area is characterized by an impervious cover type, other than approximately 490 sf of vegetated area around the perimeter of the existing parking lot.

POST-DEVELOPMENT DRAINAGE

The proposed development has been designed to match the pre-development drainage patterns to the greatest extent feasible. In the post-development condition, the site has been analyzed at the same two Summation Points as in Pre-Development. The total analysis area is the same between pre- and post-development. The post-development model contains 3 subcatchments:

Subcatchment 1 includes the existing building at 1 Congress Street, as well as the proposed building abutting it to the north. Both the existing and proposed building roof areas will be directed to Summation Point 1 via roof drains.

Subcatchment 2 includes all of Newberry Way, as well as the parcel identified as Map 117 Lot 8. Runoff from these areas is directed as surface flow to the public subsurface system on Fleet Street (Summation Point 2.)

Subcatchment 3 is unchanged from pre-development conditions.

Most of the post-development analysis area is characterized by an impervious cover

type, other than approximately 1,915 sf of proposed landscaped area along Haven Court.

Pre/Post Development Comparison

The overall impervious coverage of the subcatchment areas analyzed in this report decreases from 98.94% in the pre-development condition to 95.88% in the post-development condition. The proposed impervious area for this development includes the 490 sf of existing landscaped area that will be removed. The proposed development will include 1,915 sf of new landscaped area, resulting in a net impervious area decrease of 1,425 sf.

Drainage patterns will generally remain the same in post-development conditions as in pre-development. While Haven Court originally contained a high point in its center, with its western half draining to the west and its eastern half draining to the east, the proposed development will alter this grade so that all of Newberry Way will drain to the west. This change will result in an insignificant decrease in peak flows at Summation Point 1, and an insignificant increase in peak flows at Summation Point 2. Please see the table below for peak discharge values. With increases/decreases of <1 cfs for the 50-year storm event, adverse impacts to downstream systems are not anticipated. Trench drains are proposed along Newberry Way which will prevent channelization of surface flow onto Fleet Street.

The table shows a summary of the comparison between pre-developed flows and post-developed flows for both Summation Points.

Pre-Development to Post-Development Comparison

		2-Year Storm (cfs)	10-Year Storm (cfs)	25-Year Storm (cfs)	50-Year Storm (cfs)	50-Year Storm Net Change (cfs)
Summation Point 1	Pre	2.03	3.12	3.96	4.75	-0.87
	Post	1.67	2.55	3.24	3.88	
Summation Point 2	Pre	3.59	5.48	6.96	8.34	+0.85
	Post	~~3.92~~	~~6.02~~	7.65	9.19	

Stormwater Quality

As mentioned above, the City of Portsmouth specifies that 30% of existing impervious cover in addition to 100% of additional proposed impervious cover is treated in a Redevelopment project. Please see the calculations below for a demonstration of how this standard is met.

Existing Impervious Cover: 41,933 square feet
Proposed Impervious Cover: 490 square feet
Required Treatment Area: (41,933 sf * 30%) + (490 sf * 100%) = 13,070 sf

The runoff from both the existing and proposed building roofs at 1 Congress Street will be collected in a roof drain system. This system will be equipped with a BioClean roof drain filter. This filter will provide contaminant removal as required by the City's Land Use code. This roof area is approximately 13,817 square feet, exceeding the required treatment area of 13,070 sf. Product cutsheets for this filter have been provided with this report.

CONCLUSION

The proposed development has been designed to match the pre-development drainage patterns to the greatest extent feasible. With the design of the roof drain filter the post-development runoff is treated sufficiently. Erosion and sediment control practices will be implemented for both the temporary condition during construction and for final stabilization after construction. Therefore, there are no negative impacts to downstream receptors or adjacent properties anticipated as a result of this project.

REFERENCES

1. Comprehensive Environmental Inc. and New Hampshire Department of Environmental Services. New Hampshire Stormwater Manual (Volumes 1, 2 and 3), December 2008 (Revision 1.0).
2. Minnick, E.L. and H.T. Marshall. Stormwater Management and Erosion and Sediment Control Handbook for Urban and Developing Areas in New Hampshire, prepared by Rockingham County Conservation District, prepared for New Hampshire Department of Environmental Services, in cooperation with USDA Soil Conservation Service, August 1992.
3. HydroCAD Software Solution, LLC. HydroCAD Stormwater Modeling System Version 10.20 copyright 2022.

Tax Map

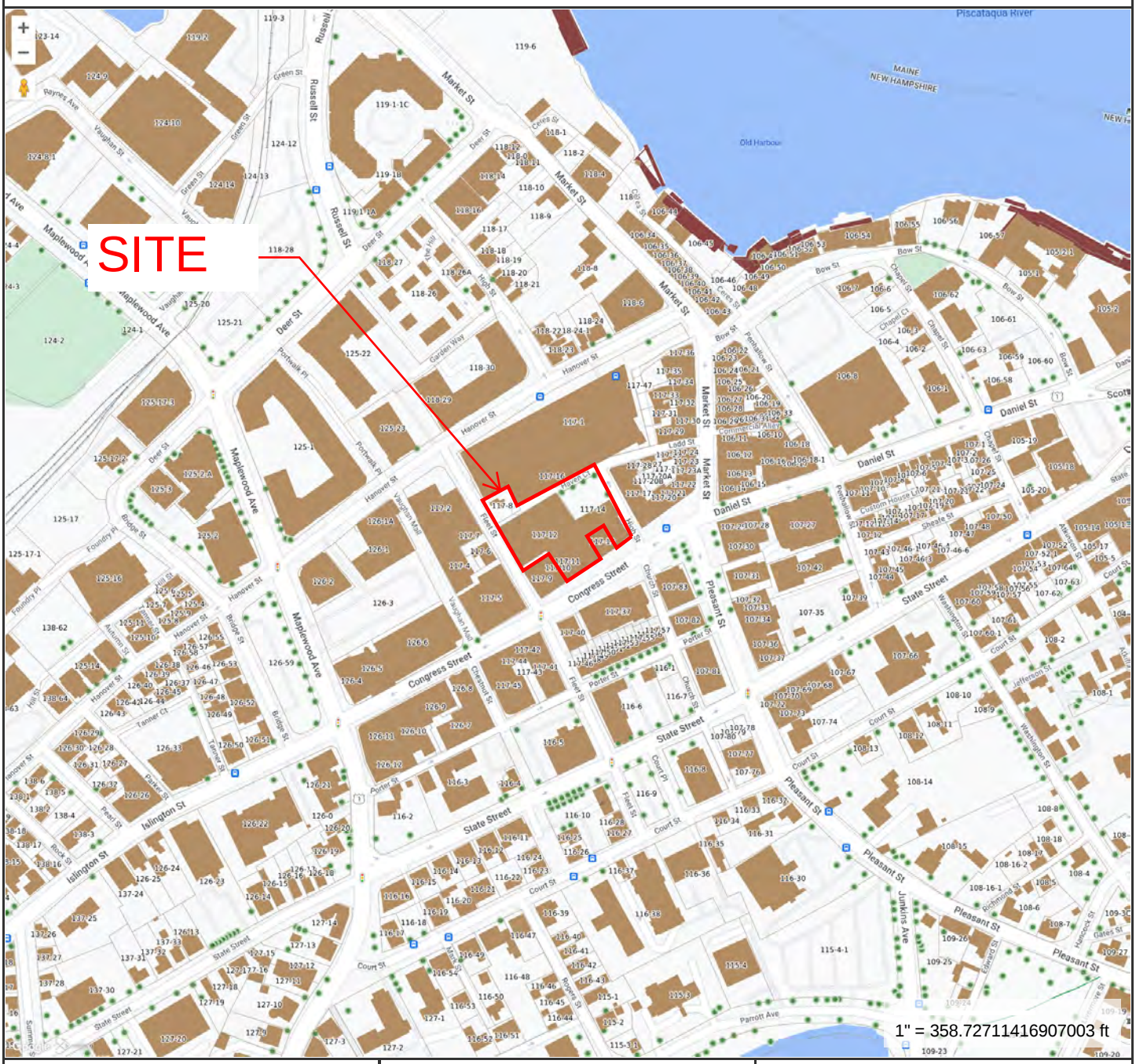

MAP FOR REFERENCE ONLY
NOT A LEGAL DOCUMENT

City of Portsmouth, NH makes no claims and no warranties, expressed or implied, concerning the validity or accuracy of the GIS data presented on this map.

Geometry updated 09/26/2024

Print map scale is approximate. Critical layout or measurement activities should not be done using this resource.

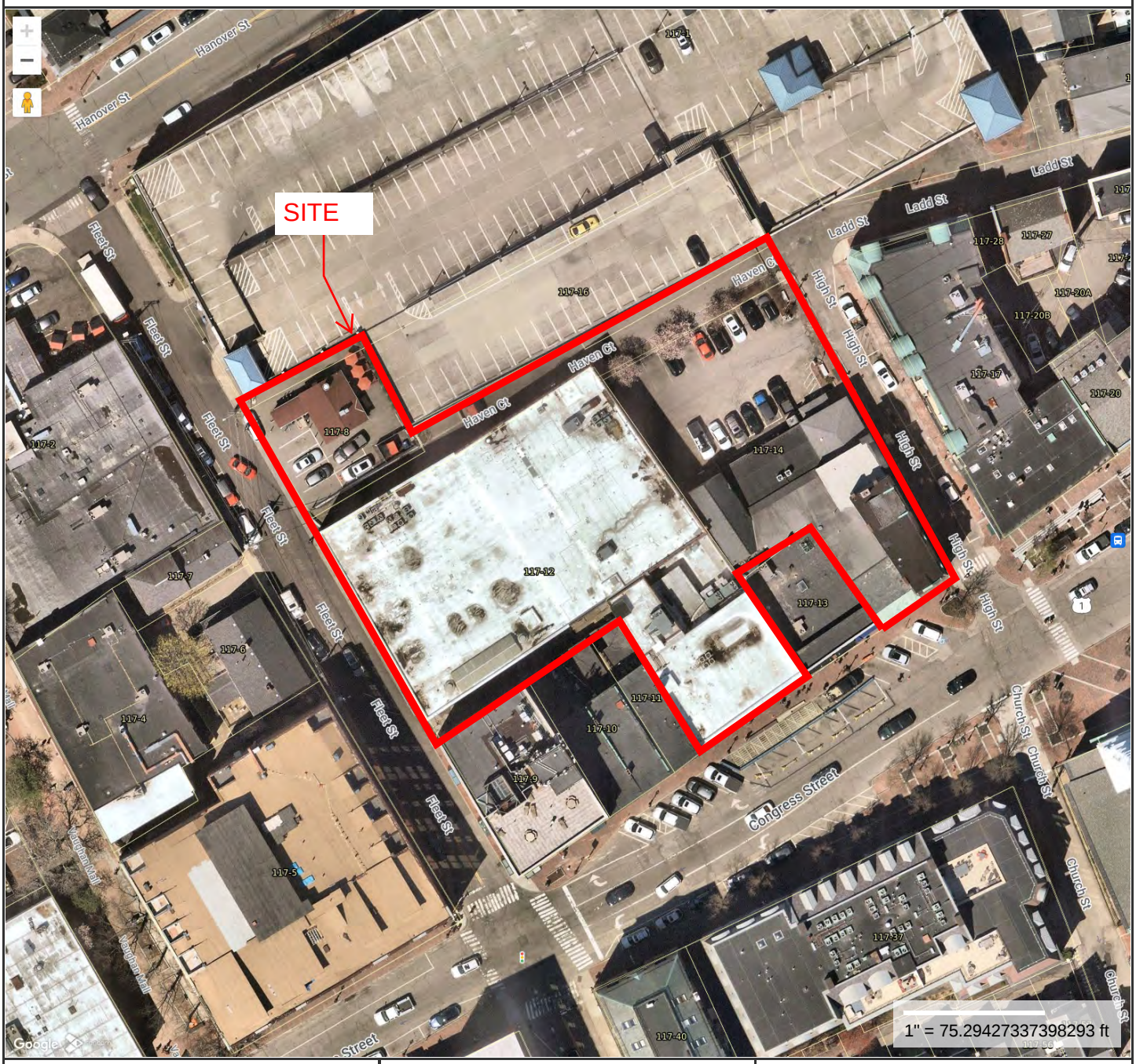

MAP FOR REFERENCE ONLY
NOT A LEGAL DOCUMENT

City of Portsmouth, NH makes no claims and no warranties, expressed or implied, concerning the validity or accuracy of the GIS data presented on this map.

Geometry updated 09/26/2024

Print map scale is approximate. Critical layout or measurement activities should not be done using this resource.

United States Department of Agriculture

Natural Resources Conservation Service

A product of the National Cooperative Soil Survey, a joint effort of the United States Department of Agriculture and other Federal agencies, State agencies including the Agricultural Experiment Stations, and local participants

Custom Soil Resource Report for Rockingham County, New Hampshire

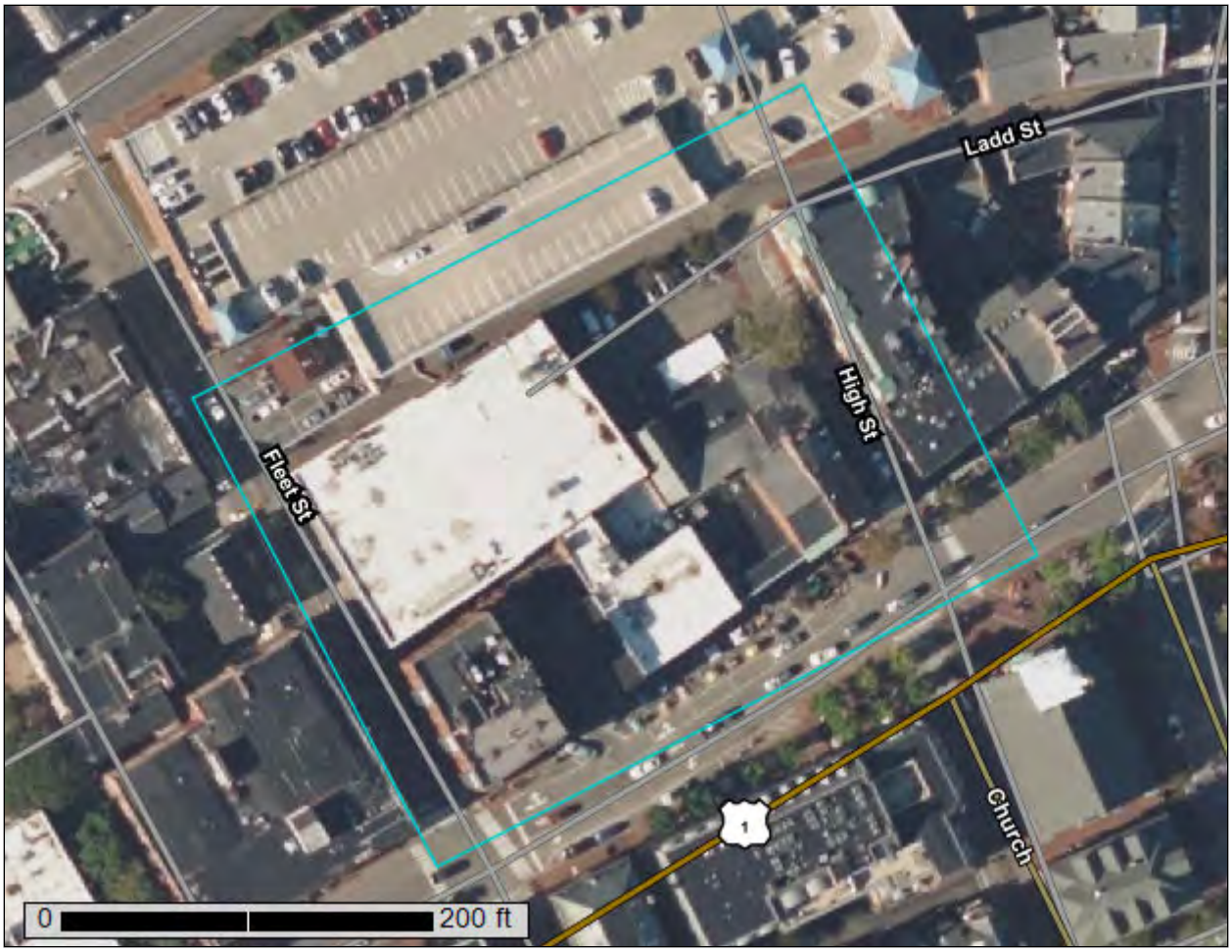

November 14, 2024

Soil Map

The soil map section includes the soil map for the defined area of interest, a list of soil map units on the map and extent of each map unit, and cartographic symbols displayed on the map. Also presented are various metadata about data used to produce the map, and a description of each soil map unit.

Custom Soil Resource Report
Soil Map

Map Scale: 1:1,080 if printed on A landscape (11" x 8.5") sheet.

N

Meters: 0 15 30 60 90

Feet: 0 50 100 200 300

Map projection: Web Mercator Corner coordinates: WGS84 Edge tics: UTM Zone 19N WGS84

MAP LEGEND

Area of Interest (AOI)

- Area of Interest (AOI)

Soils

- Soil Map Unit Polygons
- Soil Map Unit Lines
- Soil Map Unit Points

Special Point Features

- Blowout
- Borrow Pit
- Clay Spot
- Closed Depression
- Gravel Pit
- Gravelly Spot
- Landfill
- Lava Flow
- Marsh or swamp
- Mine or Quarry
- Miscellaneous Water
- Perennial Water
- Rock Outcrop
- Saline Spot
- Sandy Spot
- Severely Eroded Spot
- Sinkhole
- Slide or Slip
- Sodic Spot
- Spoil Area
- Stony Spot
- Very Stony Spot
- Wet Spot
- Other
- Special Line Features

Water Features

- Streams and Canals

Transportation

- Rails
- Interstate Highways
- US Routes
- Major Roads
- Local Roads

Background

- Aerial Photography

MAP INFORMATION

The soil surveys that comprise your AOI were mapped at 1:24,000.

Warning: Soil Map may not be valid at this scale.

Enlargement of maps beyond the scale of mapping can cause misunderstanding of the detail of mapping and accuracy of soil line placement. The maps do not show the small areas of contrasting soils that could have been shown at a more detailed scale.

Please rely on the bar scale on each map sheet for map measurements.

Source of Map: Natural Resources Conservation Service
Web Soil Survey URL:
Coordinate System: Web Mercator (EPSG:3857)

Maps from the Web Soil Survey are based on the Web Mercator projection, which preserves direction and shape but distorts distance and area. A projection that preserves area, such as the Albers equal-area conic projection, should be used if more accurate calculations of distance or area are required.

This product is generated from the USDA-NRCS certified data as of the version date(s) listed below.

Soil Survey Area: Rockingham County, New Hampshire
Survey Area Data: Version 27, Sep 3, 2024

Soil map units are labeled (as space allows) for map scales 1:50,000 or larger.

Date(s) aerial images were photographed: Jun 19, 2020—Sep 20, 2020

The orthophoto or other base map on which the soil lines were compiled and digitized probably differs from the background imagery displayed on these maps. As a result, some minor shifting of map unit boundaries may be evident.

Map Unit Legend

Map Unit Symbol	Map Unit Name	Acres in AOI	Percent of AOI
699	Urban land	2.4	100.0%
Totals for Area of Interest		**2.4**	**100.0%**

Map Unit Descriptions

The map units delineated on the detailed soil maps in a soil survey represent the soils or miscellaneous areas in the survey area. The map unit descriptions, along with the maps, can be used to determine the composition and properties of a unit.

A map unit delineation on a soil map represents an area dominated by one or more major kinds of soil or miscellaneous areas. A map unit is identified and named according to the taxonomic classification of the dominant soils. Within a taxonomic class there are precisely defined limits for the properties of the soils. On the landscape, however, the soils are natural phenomena, and they have the characteristic variability of all natural phenomena. Thus, the range of some observed properties may extend beyond the limits defined for a taxonomic class. Areas of soils of a single taxonomic class rarely, if ever, can be mapped without including areas of other taxonomic classes. Consequently, every map unit is made up of the soils or miscellaneous areas for which it is named and some minor components that belong to taxonomic classes other than those of the major soils.

Most minor soils have properties similar to those of the dominant soil or soils in the map unit, and thus they do not affect use and management. These are called noncontrasting, or similar, components. They may or may not be mentioned in a particular map unit description. Other minor components, however, have properties and behavioral characteristics divergent enough to affect use or to require different management. These are called contrasting, or dissimilar, components. They generally are in small areas and could not be mapped separately because of the scale used. Some small areas of strongly contrasting soils or miscellaneous areas are identified by a special symbol on the maps. If included in the database for a given area, the contrasting minor components are identified in the map unit descriptions along with some characteristics of each. A few areas of minor components may not have been observed, and consequently they are not mentioned in the descriptions, especially where the pattern was so complex that it was impractical to make enough observations to identify all the soils and miscellaneous areas on the landscape.

The presence of minor components in a map unit in no way diminishes the usefulness or accuracy of the data. The objective of mapping is not to delineate pure taxonomic classes but rather to separate the landscape into landforms or landform segments that have similar use and management requirements. The delineation of such segments on the map provides sufficient information for the development of resource plans. If intensive use of small areas is planned, however, onsite investigation is needed to define and locate the soils and miscellaneous areas.

National Flood Hazard Layer FIRMette

FEMA

70°45'49"W 43°4'51"N

70°45'12"W 43°4'24"N

Feet

0 250 500 1,000 1,500 2,000

1:6,000

Basemap Imagery Source: USGS National Map 2023

Legend

SEE FIS REPORT FOR DETAILED LEGEND AND INDEX MAP FOR FIRM PANEL LAYOUT

SPECIAL FLOOD HAZARD AREAS

- Without Base Flood Elevation (BFE) *Zone A, V, A99*
- With BFE or Depth *Zone AE, AO, AH, VE, AR*
- Regulatory Floodway

OTHER AREAS OF FLOOD HAZARD

- 0.2% Annual Chance Flood Hazard, Areas of 1% annual chance flood with average depth less than one foot or with drainage areas of less than one square mile *Zone X*
- Future Conditions 1% Annual Chance Flood Hazard *Zone X*
- Area with Reduced Flood Risk due to Levee. See Notes. *Zone X*
- Area with Flood Risk due to Levee *Zone D*

OTHER AREAS

- NO SCREEN Area of Minimal Flood Hazard *Zone X*
- Effective LOMRs
- Area of Undetermined Flood Hazard *Zone D*

GENERAL STRUCTURES

- Channel, Culvert, or Storm Sewer
- Levee, Dike, or Floodwall

OTHER FEATURES

- B 20.2 17.5 Cross Sections with 1% Annual Chance Water Surface Elevation
- 8 Coastal Transect
- 513 Base Flood Elevation Line (BFE)
- Limit of Study
- Jurisdiction Boundary
- Coastal Transect Baseline
- Profile Baseline
- Hydrographic Feature

MAP PANELS

- Digital Data Available
- No Digital Data Available
- Unmapped

N

The pin displayed on the map is an approximate point selected by the user and does not represent an authoritative property location.

This map complies with FEMA's standards for the use of digital flood maps if it is not void as described below. The basemap shown complies with FEMA's basemap accuracy standards

The flood hazard information is derived directly from the authoritative NFHL web services provided by FEMA. This map was exported on 11/13/2024 at 8:02 PM and does not reflect changes or amendments subsequent to this date and time. The NFHL and effective information may change or become superseded by new data over time.

This map image is void if the one or more of the following map elements do not appear: basemap imagery, flood zone labels, legend, scale bar, map creation date, community identifiers, FIRM panel number, and FIRM effective date. Map images for unmapped and unmodernized areas cannot be used for regulatory purposes.

PLAN REFERENCES:

1) PLAN OF A LOT OF LAND IN PORTSMOUTH N.H. BELONGING TO THE ESTATE OF CHAS. H. MENDUM, SCALE: 1 IN = 20 FT, DATED JULY 1, 1908, PREPARED BY WM. A. GROVER CIVIL ENGINEER, RCRD 00469.
2) LAND ON HAVEN COURT PORTSMOUTH, N.H., F.W. HARTFORD TO HISLOP GARAGE CO., SCALE: 1IN. = 20FT., DATED FEB. 1926, PREPARED BY JOHN W. DURGIN CIVIL ENGINEER, RCRD 00376.
3) LOT PLAN NOS. 7–13 CONGRESS ST. PORTSMOUTH, N.H., SCALE: 1/4 INCH = 1 FOOT, DATED MAR. 1937, PREPARED BY JOHN W. DURGIN CIVIL ENGINEER, NOT RECORDED.
4) PLAN OF LOT NOS. 173 – 181 FLEET ST. PORTSMOUOTH, N.H., SCALE: 1IN. = 20FT., DATED NOV. 1945, PREPARED BY JOHN W. DURGIN CIVIL ENGINEER, NOT RECORDED.
5) LAND IN PORTSMOUTH, N.H., RALPH T. WOOD & IRA A. NEWICK TO J.J. NEWBERRY CO., SCALE: 1IN. = 20FT., DATED MAY 1946, PREPARED BY JOHN W. DURGIN CIVIL ENGINEER, RCRD 01243.
6) PLAN OF LOT PORTSMOUTH, N.H., NEWICK & WOOD INC. TO CITY OF PORTSMOUTH, SCALE 1IN. = 40FT., DATED MAR. 1956, PREPARED BY JOHN W. DURGIN CIVIL ENGINEERS, RCRD 02537.
7) PLAN OF LOT 26 – 30 HIGH ST. PORTSMOUTH, N.H., SCALE: 1IN. = 10FT., DATED OCT. 1961, PREPARED BY JOHN W. DURGIN CIVIL ENGINEERS, NOT RECORDED.
8) PLAN OF LAND FOR RICHARD A. CABRAL & BRUCE E. NADEAU CONGRESS/FLEET ST. COUNTY OF ROCKINGHAM PORTSMOUTH, N.H., SCALE: 1" = 20', DATED JANUARY 1987, PREPARED BY RICHARD P. MILLETTE AND ASSOCIATED, RCRD C–16161.
9) EXISTING CONDITIONS PLAN HIGH/HANOVER PARKING FACILITY, HANOVER STREET, PORTSMOUTH, NEW HAMPSHIRE FOR CITY OF PORTSMOUTH, SCALE: 1" = 20', DATED: 5/5/99, PREPARED BY JAMES VERRA AND ASSOCIATES, INC., NOT RECORDED.
10) SUBDIVISION OF ASSESSOR'S PARCEL 117/12, LAND OF WENBERRY ASSOCIATES, LLC, FLEET STREET & HAVEN COURT PORTSMOUTH, NEW HAMPSHIRE FOR CITY OF PORTSMOUTH, N.H., SCALE: 1" = 20', DATED 11/22/05, PREPARED BY JAMES VERRA AND ASSOCIATES, INC., RCRD C–34500.
11) STANDARD BOUNDARY SURVEY TAX MAP 17 LOTS 14 & 15, OWNER OF RECORD: PETER H. JARVIS & SONS, LLC, PROPERTY LOCATED AT: 1 CONGRESS STREET & HIGH STREET, CITY OF PORTSMOUTH, COUNTY OF ROCKINGHAM, STATE OF NEW HAMPSHIRE, DATED: NOVEMBER 2021, SCALE: 1" = 20', PREPARED BY AMBIT ENGINEERING, INC., RCRD D–43095.
12) SITE PLAN FOR HOUSE–GOODMAN LIMITED PARTNERSHIP 43–49 CONGRESS STREET PORTSMOUTH, N.H. PREPARED BY: RICHARD P. MILLETTE AND ASSOCIATES, SCALE: 1"=10', DATED: NOVEMBER 15, 1983, NOT RECORDED.

LEGEND:

N/F	NOW OR FORMERLY
RP	RECORD OF PROBATE
RCRD	ROCKINGHAM COUNTY REGISTRY OF DEEDS
RR SPK	RAILROAD SPIKE
11/21	MAP 11/LOT 21
IR FND	IRON ROD FOUND
IP FND	IRON PIPE FOUND
IR SET	IRON ROD SET
DH FND	DRILL HOLE FOUND
DH SET	DRILL HOLE SET
	BOUND FOUND
S	SEWER LINE
G	GAS LINE
D	STORM DRAIN
W	WATER LINE
UE	UNDERGROUND ELECTRIC
	OVERHEAD ELECTRIC/WIRES
100	CONTOUR
97x3	SPOT ELEVATION
	EDGE OF PAVEMENT (EP)
	UTILITY POLE
WSO	WATER SHUT OFF/CURB STOP
GSO	GAS SHUT OFF
GV	GATE VALVE
HYD	HYDRANT
GWE	METER (GAS, WATER, ELECTRIC)
	CATCH BASIN
	TELEPHONE MANHOLE
	SEWER MANHOLE
	DRAIN MANHOLE
EL.	ELEVATION
EP	EDGE OF PAVEMENT
FF	FINISHED FLOOR
INV	INVERT
TBM	TEMPORARY BENCH MARK
TYP	TYPICAL
VGC/SGC	VERTICAL/SLOPED GRANITE CURB

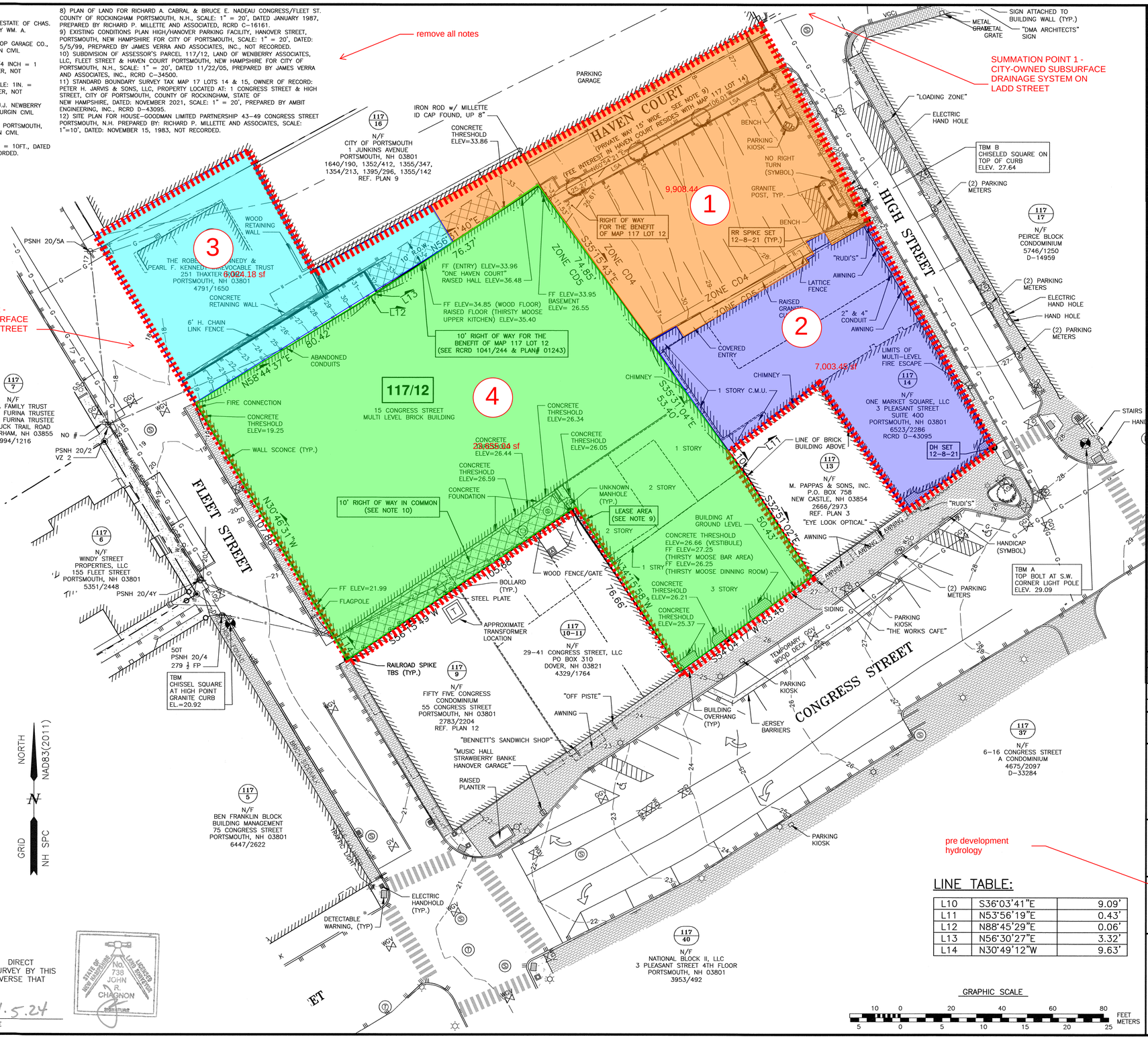

LINE TABLE:

L10	S36°03'41"E	9.09'
L11	N53°56'19"E	0.43'
L12	N88°45'29"E	0.06'
L13	N56°30'27"E	3.32'
L14	N30°49'12"W	9.63'

GRAPHIC SCALE

10 0 20 40 60 80 FEET
5 0 5 10 15 20 25 METERS

I CERTIFY THAT THIS PLAN WAS PREPARED UNDER MY DIRECT SUPERVISION, THAT IT IS THE RESULT OF A FIELD SURVEY BY THIS OFFICE AND HAS AN ACCURACY OF THE CLOSED TRAVERSE THAT EXCEEDS THE PRECISION OF 1:15,000.

JOHN R. CHAGNON, LLS 738 — DATE 11.5.24

STATE OF NEW HAMPSHIRE LICENSED LAND SURVEYOR No. 738 JOHN R. CHAGNON SIGNATURE

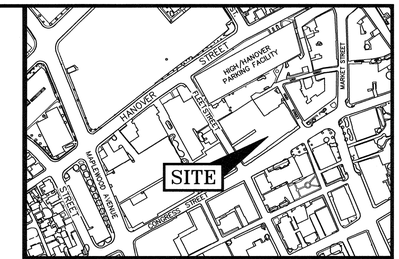

LOCATION MAP 1" = 300'

NOTES:

1) PARCEL IS SHOWN ON THE CITY OF PORTSMOUTH ASSESSORS MAP 117 AS LOT 12.

2) OWNERS OF RECORD:
WENBERRY ASSOCIATES, LLC
C/O CP MANAGEMENT
11 COURT STREET SUITE 100
EXETER, N.H. 03833
3060/164

3) PARCEL IS LOCATED IN CHARACTER DISTRICT 5.

4) DIMENSIONAL REQUIREMENTS: SEE PORTSMOUTH ORDINANCE FOR REQUIREMENTS.

5) EXISTING LOT AREA:

LOT 12 AREA:
23,708 S.F.
0.5443 ACRES

LOT 14 AREA (AFTER LLR):
18,225 S.F.
0.4184 ACRES

PROPOSED COMBINED LOT AREA:
41,933 S.F.
0.9626 ACRES

6) PARCELS ARE NOT IN A SPECIAL FLOOD HAZARD AREA AS SHOWN ON FIRM PANEL 33015C0259F, EFFECTIVE JANUARY 29, 2021

7) THE PURPOSE OF THIS PLAN IS TO SHOW THE RESULTS OF A STANDARD BOUNDARY SURVEY AND EXISTING CONDITIONS ON ASSESSORS MAP 117 LOT 12.

8) VERTICAL DATUM IS NAVD88. BASIS OF VERTICAL DATUM IS REDUNDANT RTN GNSS OBS.

9) PARCEL IS SUBJECT TO A LEASE AGREEMENT FOR A PORTION OF LESSEE'S WALL IS ENCROACHING ON SUBJEST PARCEL. SEE RCRD 1512/410 & 1690/130.

10) PARCEL IS SUBJECT TO A RIGHT OF WAY IN COMMON FOR PASSAGE AND UTILITIES AND GENERAL PURPOSES PER DEEDS. SEE RCRD 322/318, 322/380, 322/381, 348/80, 348/81, 348/82, 1484/44, 2713/797, AND RCRD C–16161.

11) PARCEL IS SUBJECT TO A UTILITY EASEMENT TO P.S.N.H. FROM UTILITY POLE 20/4 ON FLEET STREET EASTERLY TO GRANTORS EASTERLY BOUNDARY. SEE RCRD 3124/695.

12) HAVEN COURT IS A PRIVATE WAY 15 FEET WIDE. ALL RIGHTS, TITLE AND INTEREST UNTO SAID HAVEN COURT WERE CONVEYED WITH ASSESSOR'S MAP 117 LOT 15, AS DESCRIBED IN RCRD 983/179, SUBJECT TO RIGHTS OF OTHERS (OTHERS NOT DEFINED ON THIS SURVEY).

No.	DATE	DESCRIPTION	BY	CHK.
2	11/5/24	ISSUED FOR COMMENT	EDS	JRC
1	8/15/24	PARTY WALL	RJB	JRC
0	7/24/24	ISSUED FOR COMMENT	RJB	JRC

DRAWING ISSUE STATUS
SITE SURVEY

HALEY WARD
ENGINEERING | ENVIRONMENTAL | SURVEYING
200 Griffin Rd. Unit 14
Portsmouth, New Hampshire 03801
603.430.9282
WWW.HALEYWARD.COM

PROJECT
APPLICANT: ONE MARKET SQUARE, LLC
1-15 CONGRESS STREET PORTSMOUTH, N.H.

TITLE
15 CONGRESS
STANDARD BOUNDARY SURVEY &
EXISTING CONDITIONS PLAN
OF THE DEVELOPMENT PARCEL

DATE	SCALE
JULY 2024	1" = 20'

DRAWN BY	DESIGNED BY	CHECKED BY
RJB	—	JRC

PROJECT No.	FIELD BOOK & PAGE
5010156.01	FB 309 PG 54

SHEET No.	REV.
V101	2

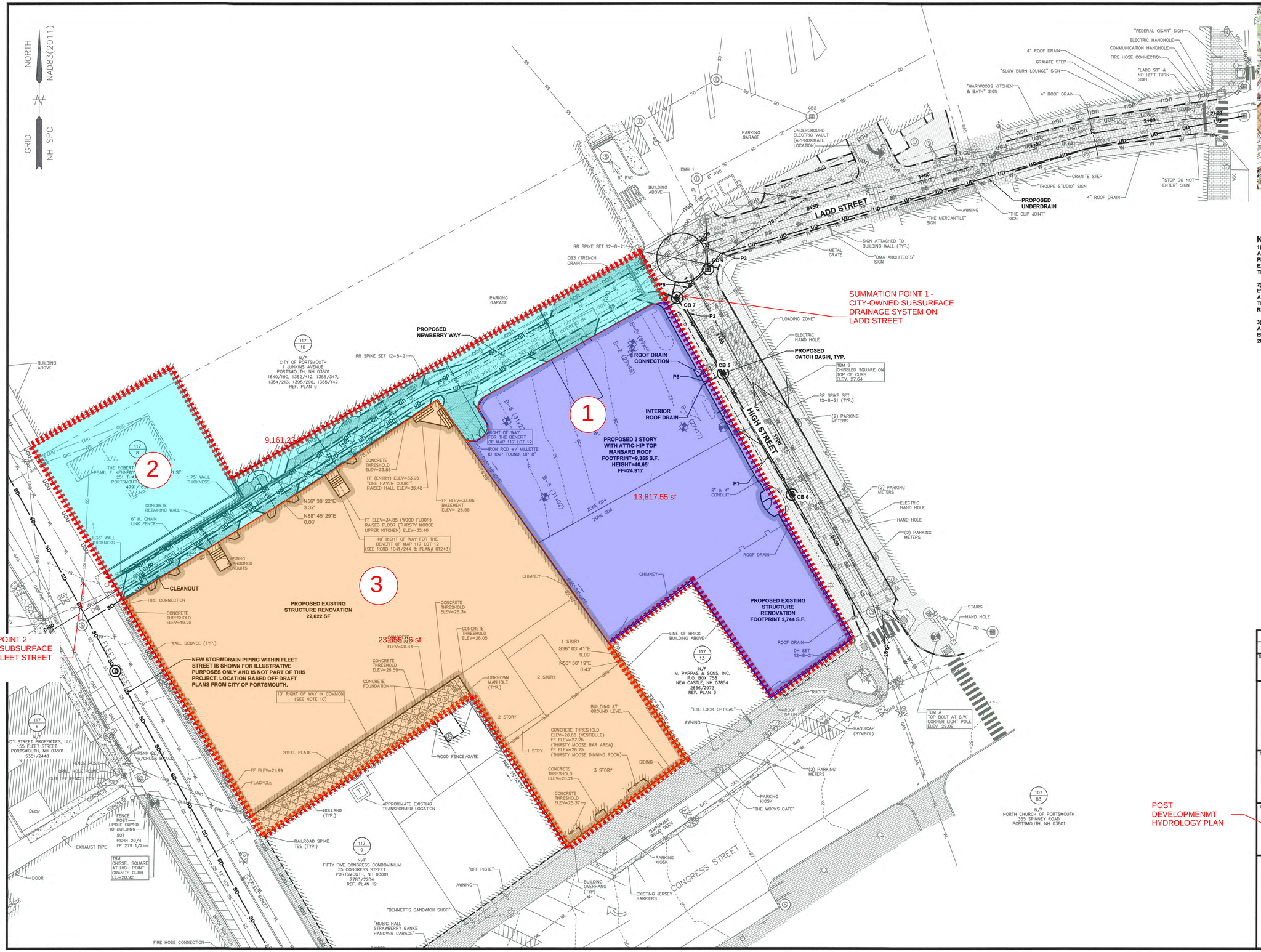

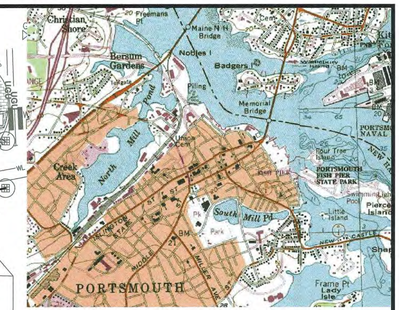

LOCATION MAP: USGS QUADRANGLE: PORTSMOUTH
MAPTECH® USGS TOPOGRAPHIC SERIES™, ©MAPTECH®, INC. 978-933-3000
WWW.MAPTECH.COM/TOPO
SCALE: 1"=2000'

NOTES:

1) THE CONTRACTOR SHALL NOTIFY DIG SAFE AT 1-888-DIG-SAFE (1-888-344-7233) AT LEAST 72 HOURS PRIOR TO COMMENCING ANY EXCAVATION ON PUBLIC OR PRIVATE PROPERTY WITHIN 100 FEET OF UNDERGROUND UTILITIES. THE EXCAVATOR IS RESPONSIBLE TO MAINTAIN MARKS. DIG SAFE TICKETS EXPIRE IN THIRTY DAYS.

2) UNDERGROUND UTILITY LOCATIONS ARE BASED UPON BEST AVAILABLE EVIDENCE AND ARE NOT FIELD VERIFIED. LOCATING AND PROTECTING ANY ABOVEGROUND OR UNDERGROUND UTILITIES IS THE SOLE RESPONSIBILITY OF THE CONTRACTOR AND/OR THE OWNER. UTILITY CONFLICTS SHOULD BE REPORTED AT ONCE TO THE DESIGN ENGINEER.

3) CONTRACTOR SHALL INSTALL AND MAINTAIN EROSION CONTROL MEASURES IN ACCORDANCE WITH THE "NEW HAMPSHIRE STORMWATER MANUAL, VOLUME 3, EROSION AND SEDIMENT CONTROLS DURING CONSTRUCTION. (NHDES DECEMBER 2008).

GRAPHIC SCALE

20 0 20 40 60

19.99 ft

(IN FEET)
1 inch = 20 ft.

REV.	DATE	DESCRIPTION	BY	CHK.
1	2024.11.05	ISSUED FOR COMMENTS	PJM	JRC

DRAWING ISSUE STATUS

PERMIT PLANS

HALEY WARD
ENGINEERING | ENVIRONMENTAL | SURVEYING
WWW.HALEYWARD.COM
200 Griffin Rd. Unit 14
Portsmouth, New Hampshire 03801
603.430.9282

PROJECT

MIXED USE DEVELOPMENT
1-15 CONGRESS STREET PORTSMOUTH, N.H.

TITLE

POST DEVELOPMENMT HYDROLOGY PLAN

GRADING AND DRAINAGE PLAN

DATE	SCALE
JULY 2024	1" = 20'

DRAWN BY	DESIGNED BY	CHECKED BY
PJM	---	JRC

PROJECT No. 5010156.3406

SHEET No. C104

REV. No. 1

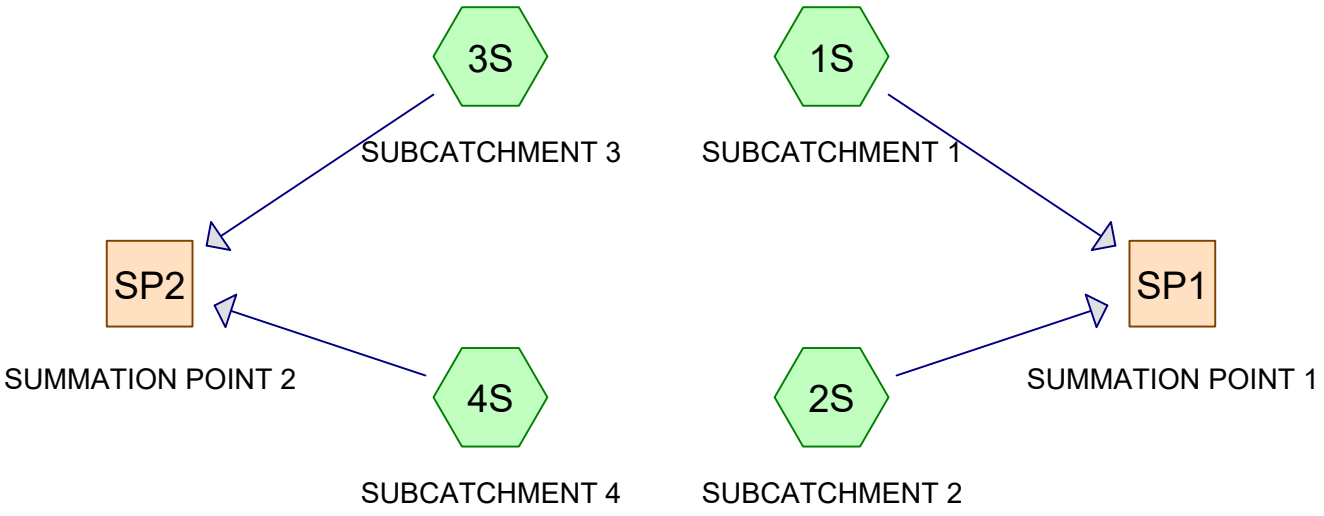

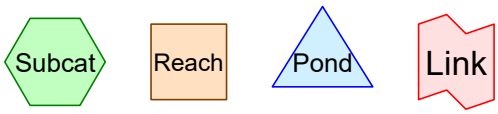

Routing Diagram for Pre Development
Prepared by Haley Ward, Printed 11/14/2024
HydroCAD® 10.20-5c s/n 00641 © 2023 HydroCAD Software Solutions LLC

Time span=5.00-20.00 hrs, dt=0.05 hrs, 301 points
Runoff by SCS TR-20 method, UH=SCS, Weighted-CN
Reach routing by Stor-Ind+Trans method - Pond routing by Stor-Ind method

Subcatchment1S: SUBCATCHMENT1 Runoff Area=9,908 sf 95.05% Impervious Runoff Depth>3.10"
Tc=5.0 min CN=97 Runoff=1.19 cfs 0.059 af

Subcatchment2S: SUBCATCHMENT2 Runoff Area=7,003 sf 100.00% Impervious Runoff Depth>3.18"
Tc=5.0 min CN=98 Runoff=0.85 cfs 0.043 af

Subcatchment3S: SUBCATCHMENT3 Runoff Area=6,024 sf 100.00% Impervious Runoff Depth>3.18"
Tc=5.0 min CN=98 Runoff=0.73 cfs 0.037 af

Subcatchment4S: SUBCATCHMENT4 Runoff Area=23,655 sf 100.00% Impervious Runoff Depth>3.18"
Tc=5.0 min CN=98 Runoff=2.86 cfs 0.144 af

Reach SP1: SUMMATION POINT 1 Inflow=2.03 cfs 0.101 af
Outflow=2.03 cfs 0.101 af

Reach SP2: SUMMATION POINT 2 Inflow=3.59 cfs 0.181 af
Outflow=3.59 cfs 0.181 af

Total Runoff Area = 1.070 ac Runoff Volume = 0.282 af Average Runoff Depth = 3.16"
1.05% Pervious = 0.011 ac 98.95% Impervious = 1.058 ac

Summary for Subcatchment 1S: SUBCATCHMENT 1

Runoff = 1.19 cfs @ 11.95 hrs, Volume= 0.059 af, Depth> 3.10"
Routed to Reach SP1 : SUMMATION POINT 1

Runoff by SCS TR-20 method, UH=SCS, Weighted-CN, Time Span= 5.00-20.00 hrs, dt= 0.05 hrs
Type II 24-hr 2-yr Rainfall=3.68"

	Area (sf)	CN	Description
*	9,418	98	IMPERVIOUS
	490	84	50-75% Grass cover, Fair, HSG D
	9,908	97	Weighted Average
	490		4.95% Pervious Area
	9,418		95.05% Impervious Area

Tc (min)	Length (feet)	Slope (ft/ft)	Velocity (ft/sec)	Capacity (cfs)	Description
5.0					**Direct Entry,**

Summary for Subcatchment 2S: SUBCATCHMENT 2

Runoff = 0.85 cfs @ 11.95 hrs, Volume= 0.043 af, Depth> 3.18"
Routed to Reach SP1 : SUMMATION POINT 1

Runoff by SCS TR-20 method, UH=SCS, Weighted-CN, Time Span= 5.00-20.00 hrs, dt= 0.05 hrs
Type II 24-hr 2-yr Rainfall=3.68"

	Area (sf)	CN	Description
*	7,003	98	IMPERVIOUS
	7,003		100.00% Impervious Area

Tc (min)	Length (feet)	Slope (ft/ft)	Velocity (ft/sec)	Capacity (cfs)	Description
5.0					**Direct Entry,**

Summary for Subcatchment 3S: SUBCATCHMENT 3

Runoff = 0.73 cfs @ 11.95 hrs, Volume= 0.037 af, Depth> 3.18"
Routed to Reach SP2 : SUMMATION POINT 2

Runoff by SCS TR-20 method, UH=SCS, Weighted-CN, Time Span= 5.00-20.00 hrs, dt= 0.05 hrs
Type II 24-hr 2-yr Rainfall=3.68"

	Area (sf)	CN	Description
*	6,024	98	IMPERVIOUS
	6,024		100.00% Impervious Area

Tc (min)	Length (feet)	Slope (ft/ft)	Velocity (ft/sec)	Capacity (cfs)	Description
5.0					**Direct Entry,**

Summary for Subcatchment 4S: SUBCATCHMENT 4

Runoff = 2.86 cfs @ 11.95 hrs, Volume= 0.144 af, Depth> 3.18"
Routed to Reach SP2 : SUMMATION POINT 2

Runoff by SCS TR-20 method, UH=SCS, Weighted-CN, Time Span= 5.00-20.00 hrs, dt= 0.05 hrs
Type II 24-hr 2-yr Rainfall=3.68"

	Area (sf)	CN	Description
*	23,655	98	IMPERVIOUS
	23,655		100.00% Impervious Area

Tc (min)	Length (feet)	Slope (ft/ft)	Velocity (ft/sec)	Capacity (cfs)	Description
5.0					**Direct Entry,**

Summary for Reach SP1: SUMMATION POINT 1

Inflow Area = 0.388 ac, 97.10% Impervious, Inflow Depth > 3.13" for 2-yr event
Inflow = 2.03 cfs @ 11.95 hrs, Volume= 0.101 af
Outflow = 2.03 cfs @ 11.95 hrs, Volume= 0.101 af, Atten= 0%, Lag= 0.0 min

Routing by Stor-Ind+Trans method, Time Span= 5.00-20.00 hrs, dt= 0.05 hrs

Summary for Reach SP2: SUMMATION POINT 2

Inflow Area = 0.681 ac,100.00% Impervious, Inflow Depth > 3.18" for 2-yr event
Inflow = 3.59 cfs @ 11.95 hrs, Volume= 0.181 af
Outflow = 3.59 cfs @ 11.95 hrs, Volume= 0.181 af, Atten= 0%, Lag= 0.0 min

Routing by Stor-Ind+Trans method, Time Span= 5.00-20.00 hrs, dt= 0.05 hrs

Time span=5.00-20.00 hrs, dt=0.05 hrs, 301 points
Runoff by SCS TR-20 method, UH=SCS, Weighted-CN
Reach routing by Stor-Ind+Trans method - Pond routing by Stor-Ind method

Subcatchment1S: SUBCATCHMENT1 Runoff Area=9,908 sf 95.05% Impervious Runoff Depth>4.83"
Tc=5.0 min CN=97 Runoff=1.82 cfs 0.092 af

Subcatchment2S: SUBCATCHMENT2 Runoff Area=7,003 sf 100.00% Impervious Runoff Depth>4.90"
Tc=5.0 min CN=98 Runoff=1.29 cfs 0.066 af

Subcatchment3S: SUBCATCHMENT3 Runoff Area=6,024 sf 100.00% Impervious Runoff Depth>4.90"
Tc=5.0 min CN=98 Runoff=1.11 cfs 0.056 af

Subcatchment4S: SUBCATCHMENT4 Runoff Area=23,655 sf 100.00% Impervious Runoff Depth>4.90"
Tc=5.0 min CN=98 Runoff=4.37 cfs 0.222 af

Reach SP1: SUMMATION POINT 1 Inflow=3.12 cfs 0.157 af
Outflow=3.12 cfs 0.157 af

Reach SP2: SUMMATION POINT 2 Inflow=5.48 cfs 0.278 af
Outflow=5.48 cfs 0.278 af

Total Runoff Area = 1.070 ac Runoff Volume = 0.435 af Average Runoff Depth = 4.89"
1.05% Pervious = 0.011 ac 98.95% Impervious = 1.058 ac

Summary for Subcatchment 1S: SUBCATCHMENT 1

Runoff = 1.82 cfs @ 11.95 hrs, Volume= 0.092 af, Depth> 4.83"
Routed to Reach SP1 : SUMMATION POINT 1

Runoff by SCS TR-20 method, UH=SCS, Weighted-CN, Time Span= 5.00-20.00 hrs, dt= 0.05 hrs
Type II 24-hr 10-yr Rainfall=5.59"

	Area (sf)	CN	Description
*	9,418	98	IMPERVIOUS
	490	84	50-75% Grass cover, Fair, HSG D
	9,908	97	Weighted Average
	490		4.95% Pervious Area
	9,418		95.05% Impervious Area

Tc (min)	Length (feet)	Slope (ft/ft)	Velocity (ft/sec)	Capacity (cfs)	Description
5.0					**Direct Entry,**

Summary for Subcatchment 2S: SUBCATCHMENT 2

Runoff = 1.29 cfs @ 11.95 hrs, Volume= 0.066 af, Depth> 4.90"
Routed to Reach SP1 : SUMMATION POINT 1

Runoff by SCS TR-20 method, UH=SCS, Weighted-CN, Time Span= 5.00-20.00 hrs, dt= 0.05 hrs
Type II 24-hr 10-yr Rainfall=5.59"

	Area (sf)	CN	Description
*	7,003	98	IMPERVIOUS
	7,003		100.00% Impervious Area

Tc (min)	Length (feet)	Slope (ft/ft)	Velocity (ft/sec)	Capacity (cfs)	Description
5.0					**Direct Entry,**

Summary for Subcatchment 3S: SUBCATCHMENT 3

Runoff = 1.11 cfs @ 11.95 hrs, Volume= 0.056 af, Depth> 4.90"
Routed to Reach SP2 : SUMMATION POINT 2

Runoff by SCS TR-20 method, UH=SCS, Weighted-CN, Time Span= 5.00-20.00 hrs, dt= 0.05 hrs
Type II 24-hr 10-yr Rainfall=5.59"

	Area (sf)	CN	Description
*	6,024	98	IMPERVIOUS
	6,024		100.00% Impervious Area

Tc (min)	Length (feet)	Slope (ft/ft)	Velocity (ft/sec)	Capacity (cfs)	Description
5.0					**Direct Entry,**

Summary for Subcatchment 4S: SUBCATCHMENT 4

Runoff = 4.37 cfs @ 11.95 hrs, Volume= 0.222 af, Depth> 4.90"
Routed to Reach SP2 : SUMMATION POINT 2

Runoff by SCS TR-20 method, UH=SCS, Weighted-CN, Time Span= 5.00-20.00 hrs, dt= 0.05 hrs
Type II 24-hr 10-yr Rainfall=5.59"

	Area (sf)	CN	Description
*	23,655	98	IMPERVIOUS
	23,655		100.00% Impervious Area

Tc (min)	Length (feet)	Slope (ft/ft)	Velocity (ft/sec)	Capacity (cfs)	Description
5.0					**Direct Entry,**

Summary for Reach SP1: SUMMATION POINT 1

Inflow Area = 0.388 ac, 97.10% Impervious, Inflow Depth > 4.86" for 10-yr event
Inflow = 3.12 cfs @ 11.95 hrs, Volume= 0.157 af
Outflow = 3.12 cfs @ 11.95 hrs, Volume= 0.157 af, Atten= 0%, Lag= 0.0 min

Routing by Stor-Ind+Trans method, Time Span= 5.00-20.00 hrs, dt= 0.05 hrs

Summary for Reach SP2: SUMMATION POINT 2

Inflow Area = 0.681 ac,100.00% Impervious, Inflow Depth > 4.90" for 10-yr event
Inflow = 5.48 cfs @ 11.95 hrs, Volume= 0.278 af
Outflow = 5.48 cfs @ 11.95 hrs, Volume= 0.278 af, Atten= 0%, Lag= 0.0 min

Routing by Stor-Ind+Trans method, Time Span= 5.00-20.00 hrs, dt= 0.05 hrs

Time span=5.00-20.00 hrs, dt=0.05 hrs, 301 points
Runoff by SCS TR-20 method, UH=SCS, Weighted-CN
Reach routing by Stor-Ind+Trans method - Pond routing by Stor-Ind method

Subcatchment1S: SUBCATCHMENT1 Runoff Area=9,908 sf 95.05% Impervious Runoff Depth>6.17"
Tc=5.0 min CN=97 Runoff=2.32 cfs 0.117 af

Subcatchment2S: SUBCATCHMENT2 Runoff Area=7,003 sf 100.00% Impervious Runoff Depth>6.24"
Tc=5.0 min CN=98 Runoff=1.64 cfs 0.084 af

Subcatchment3S: SUBCATCHMENT3 Runoff Area=6,024 sf 100.00% Impervious Runoff Depth>6.24"
Tc=5.0 min CN=98 Runoff=1.41 cfs 0.072 af

Subcatchment4S: SUBCATCHMENT4 Runoff Area=23,655 sf 100.00% Impervious Runoff Depth>6.24"
Tc=5.0 min CN=98 Runoff=5.55 cfs 0.282 af

Reach SP1: SUMMATION POINT 1 Inflow=3.96 cfs 0.201 af
Outflow=3.96 cfs 0.201 af

Reach SP2: SUMMATION POINT 2 Inflow=6.96 cfs 0.354 af
Outflow=6.96 cfs 0.354 af

Total Runoff Area = 1.070 ac Runoff Volume = 0.555 af Average Runoff Depth = 6.22"
1.05% Pervious = 0.011 ac 98.95% Impervious = 1.058 ac

Summary for Subcatchment 1S: SUBCATCHMENT 1

Runoff = 2.32 cfs @ 11.95 hrs, Volume= 0.117 af, Depth> 6.17"
Routed to Reach SP1 : SUMMATION POINT 1

Runoff by SCS TR-20 method, UH=SCS, Weighted-CN, Time Span= 5.00-20.00 hrs, dt= 0.05 hrs
Type II 24-hr 25-yr Rainfall=7.08"

	Area (sf)	CN	Description
*	9,418	98	IMPERVIOUS
	490	84	50-75% Grass cover, Fair, HSG D
	9,908	97	Weighted Average
	490		4.95% Pervious Area
	9,418		95.05% Impervious Area

Tc (min)	Length (feet)	Slope (ft/ft)	Velocity (ft/sec)	Capacity (cfs)	Description
5.0					**Direct Entry,**

Summary for Subcatchment 2S: SUBCATCHMENT 2

Runoff = 1.64 cfs @ 11.95 hrs, Volume= 0.084 af, Depth> 6.24"
Routed to Reach SP1 : SUMMATION POINT 1

Runoff by SCS TR-20 method, UH=SCS, Weighted-CN, Time Span= 5.00-20.00 hrs, dt= 0.05 hrs
Type II 24-hr 25-yr Rainfall=7.08"

	Area (sf)	CN	Description
*	7,003	98	IMPERVIOUS
	7,003		100.00% Impervious Area

Tc (min)	Length (feet)	Slope (ft/ft)	Velocity (ft/sec)	Capacity (cfs)	Description
5.0					**Direct Entry,**

Summary for Subcatchment 3S: SUBCATCHMENT 3

Runoff = 1.41 cfs @ 11.95 hrs, Volume= 0.072 af, Depth> 6.24"
Routed to Reach SP2 : SUMMATION POINT 2

Runoff by SCS TR-20 method, UH=SCS, Weighted-CN, Time Span= 5.00-20.00 hrs, dt= 0.05 hrs
Type II 24-hr 25-yr Rainfall=7.08"

	Area (sf)	CN	Description
*	6,024	98	IMPERVIOUS
	6,024		100.00% Impervious Area

Tc (min)	Length (feet)	Slope (ft/ft)	Velocity (ft/sec)	Capacity (cfs)	Description
5.0					**Direct Entry,**

Summary for Subcatchment 4S: SUBCATCHMENT 4

Runoff = 5.55 cfs @ 11.95 hrs, Volume= 0.282 af, Depth> 6.24"
Routed to Reach SP2 : SUMMATION POINT 2

Runoff by SCS TR-20 method, UH=SCS, Weighted-CN, Time Span= 5.00-20.00 hrs, dt= 0.05 hrs
Type II 24-hr 25-yr Rainfall=7.08"

	Area (sf)	CN	Description
*	23,655	98	IMPERVIOUS
	23,655		100.00% Impervious Area

Tc (min)	Length (feet)	Slope (ft/ft)	Velocity (ft/sec)	Capacity (cfs)	Description
5.0					**Direct Entry,**

Summary for Reach SP1: SUMMATION POINT 1

Inflow Area = 0.388 ac, 97.10% Impervious, Inflow Depth > 6.20" for 25-yr event
Inflow = 3.96 cfs @ 11.95 hrs, Volume= 0.201 af
Outflow = 3.96 cfs @ 11.95 hrs, Volume= 0.201 af, Atten= 0%, Lag= 0.0 min

Routing by Stor-Ind+Trans method, Time Span= 5.00-20.00 hrs, dt= 0.05 hrs

Summary for Reach SP2: SUMMATION POINT 2

Inflow Area = 0.681 ac,100.00% Impervious, Inflow Depth > 6.24" for 25-yr event
Inflow = 6.96 cfs @ 11.95 hrs, Volume= 0.354 af
Outflow = 6.96 cfs @ 11.95 hrs, Volume= 0.354 af, Atten= 0%, Lag= 0.0 min

Routing by Stor-Ind+Trans method, Time Span= 5.00-20.00 hrs, dt= 0.05 hrs

Time span=5.00-20.00 hrs, dt=0.05 hrs, 301 points
Runoff by SCS TR-20 method, UH=SCS, Weighted-CN
Reach routing by Stor-Ind+Trans method - Pond routing by Stor-Ind method

Subcatchment1S: SUBCATCHMENT1 Runoff Area=9,908 sf 95.05% Impervious Runoff Depth>7.43"
Tc=5.0 min CN=97 Runoff=2.78 cfs 0.141 af

Subcatchment2S: SUBCATCHMENT2 Runoff Area=7,003 sf 100.00% Impervious Runoff Depth>7.49"
Tc=5.0 min CN=98 Runoff=1.97 cfs 0.100 af

Subcatchment3S: SUBCATCHMENT3 Runoff Area=6,024 sf 100.00% Impervious Runoff Depth>7.49"
Tc=5.0 min CN=98 Runoff=1.69 cfs 0.086 af

Subcatchment4S: SUBCATCHMENT4 Runoff Area=23,655 sf 100.00% Impervious Runoff Depth>7.49"
Tc=5.0 min CN=98 Runoff=6.65 cfs 0.339 af

Reach SP1: SUMMATION POINT 1 Inflow=4.75 cfs 0.241 af
Outflow=4.75 cfs 0.241 af

Reach SP2: SUMMATION POINT 2 Inflow=8.34 cfs 0.425 af
Outflow=8.34 cfs 0.425 af

Total Runoff Area = 1.070 ac Runoff Volume = 0.667 af Average Runoff Depth = 7.48"
1.05% Pervious = 0.011 ac 98.95% Impervious = 1.058 ac

Summary for Subcatchment 1S: SUBCATCHMENT 1

Runoff = 2.78 cfs @ 11.95 hrs, Volume= 0.141 af, Depth> 7.43"
Routed to Reach SP1 : SUMMATION POINT 1

Runoff by SCS TR-20 method, UH=SCS, Weighted-CN, Time Span= 5.00-20.00 hrs, dt= 0.05 hrs
Type II 24-hr 50-yr Rainfall=8.48"

	Area (sf)	CN	Description
*	9,418	98	IMPERVIOUS
	490	84	50-75% Grass cover, Fair, HSG D
	9,908	97	Weighted Average
	490		4.95% Pervious Area
	9,418		95.05% Impervious Area

Tc (min)	Length (feet)	Slope (ft/ft)	Velocity (ft/sec)	Capacity (cfs)	Description
5.0					**Direct Entry,**

Subcatchment 1S: SUBCATCHMENT 1

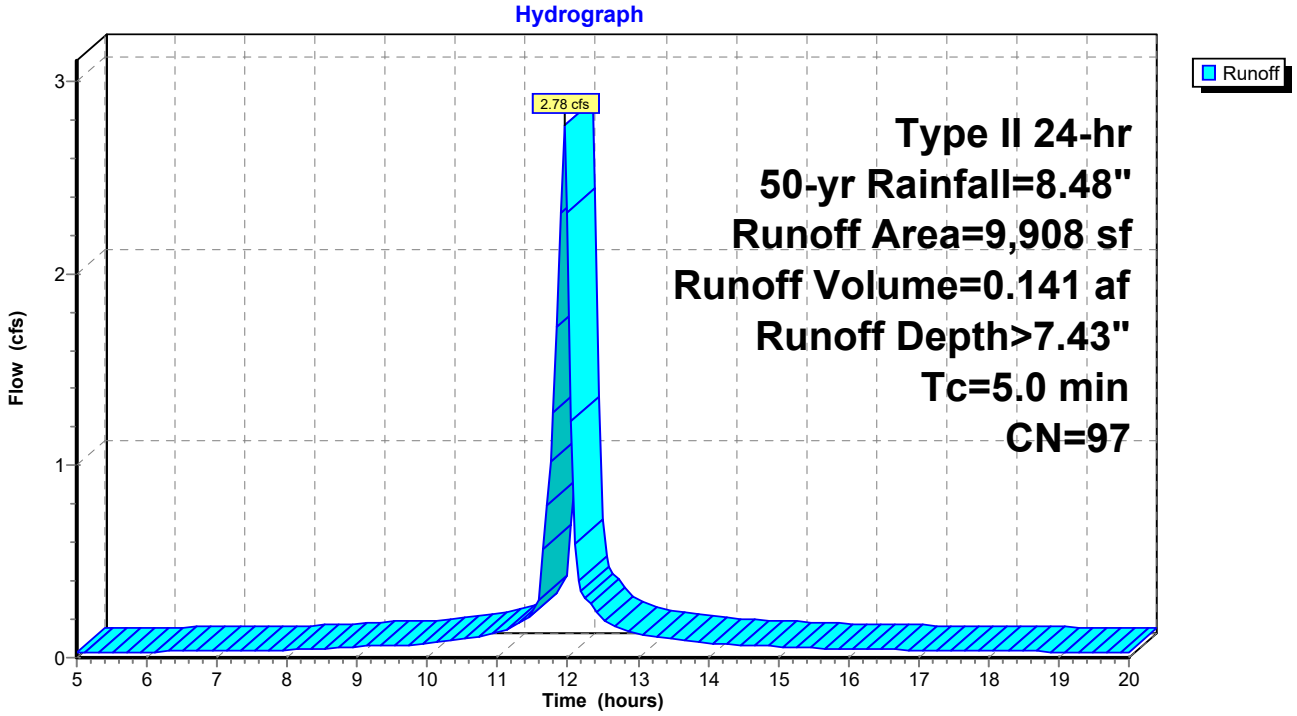

Summary for Subcatchment 2S: SUBCATCHMENT 2

Runoff = 1.97 cfs @ 11.95 hrs, Volume= 0.100 af, Depth> 7.49"
Routed to Reach SP1 : SUMMATION POINT 1

Runoff by SCS TR-20 method, UH=SCS, Weighted-CN, Time Span= 5.00-20.00 hrs, dt= 0.05 hrs
Type II 24-hr 50-yr Rainfall=8.48"

	Area (sf)	CN	Description
*	7,003	98	IMPERVIOUS
	7,003		100.00% Impervious Area

Tc (min)	Length (feet)	Slope (ft/ft)	Velocity (ft/sec)	Capacity (cfs)	Description
5.0					**Direct Entry,**

Subcatchment 2S: SUBCATCHMENT 2

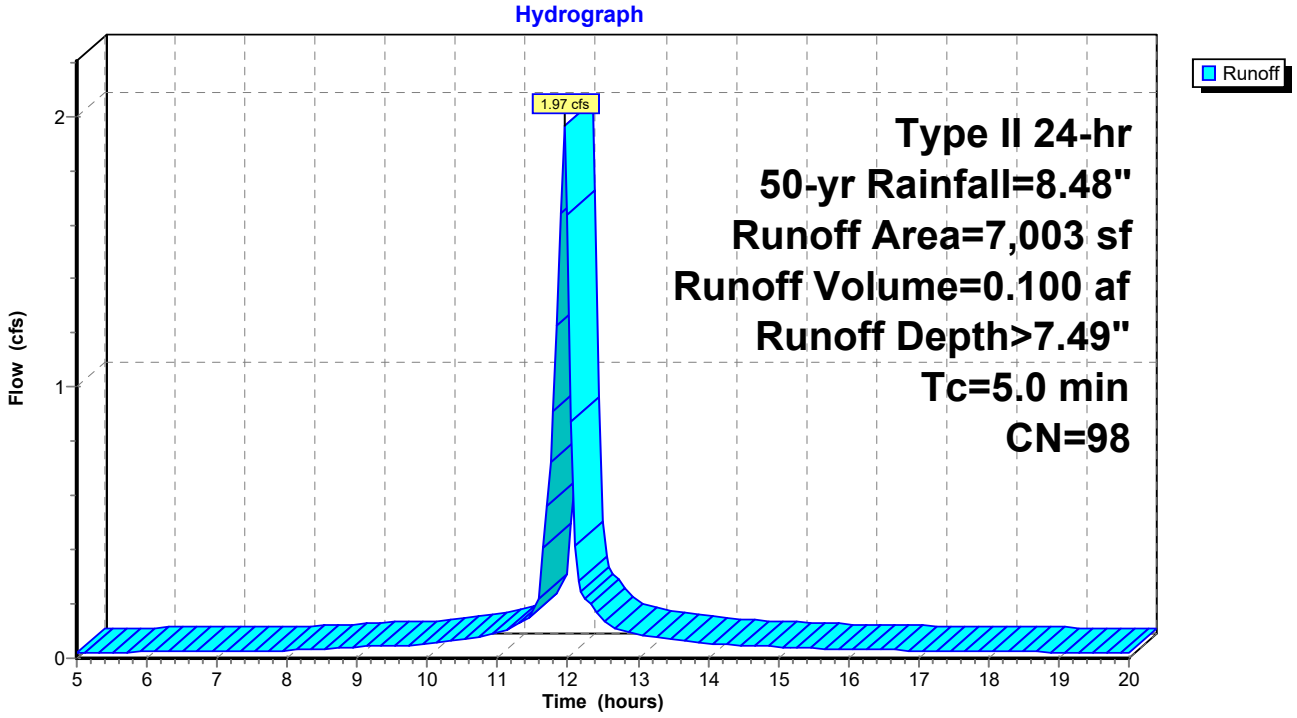

Summary for Subcatchment 3S: SUBCATCHMENT 3

Runoff = 1.69 cfs @ 11.95 hrs, Volume= 0.086 af, Depth> 7.49"
Routed to Reach SP2 : SUMMATION POINT 2

Runoff by SCS TR-20 method, UH=SCS, Weighted-CN, Time Span= 5.00-20.00 hrs, dt= 0.05 hrs
Type II 24-hr 50-yr Rainfall=8.48"

	Area (sf)	CN	Description
*	6,024	98	IMPERVIOUS
	6,024		100.00% Impervious Area

Tc (min)	Length (feet)	Slope (ft/ft)	Velocity (ft/sec)	Capacity (cfs)	Description
5.0					**Direct Entry,**

Subcatchment 3S: SUBCATCHMENT 3

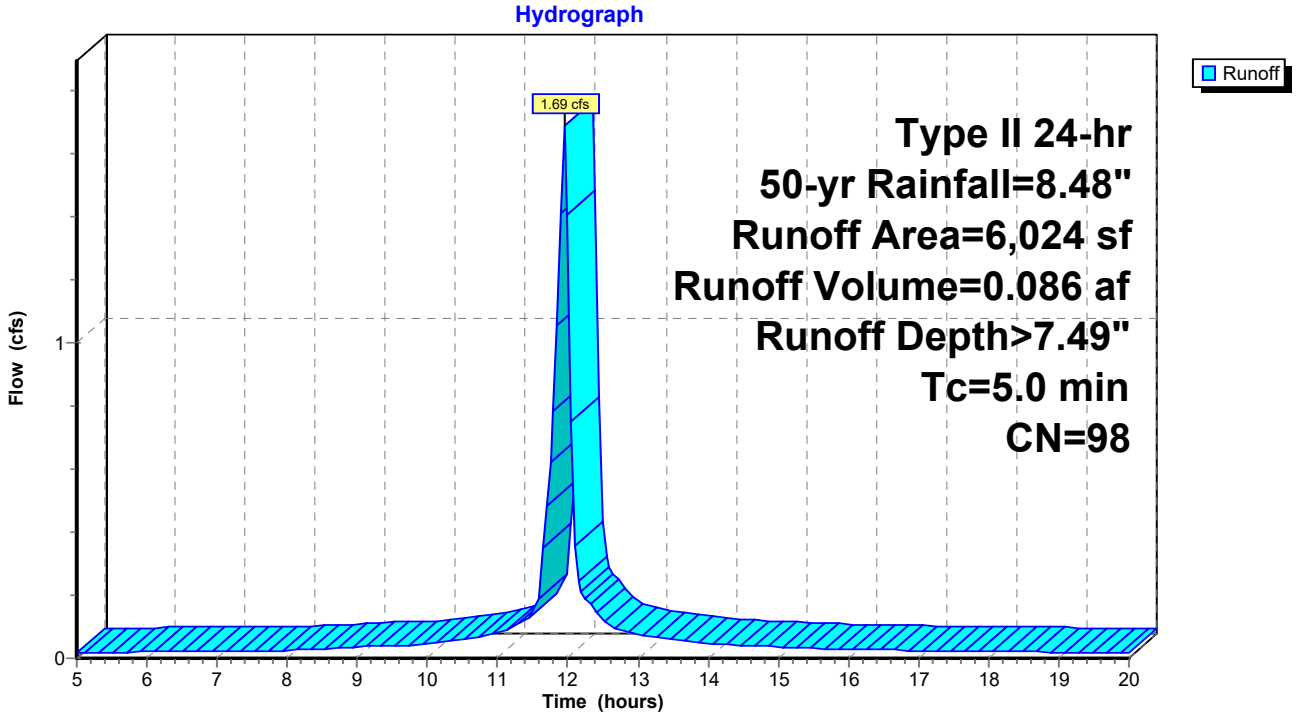

Summary for Subcatchment 4S: SUBCATCHMENT 4

Runoff = 6.65 cfs @ 11.95 hrs, Volume= 0.339 af, Depth> 7.49"
Routed to Reach SP2 : SUMMATION POINT 2

Runoff by SCS TR-20 method, UH=SCS, Weighted-CN, Time Span= 5.00-20.00 hrs, dt= 0.05 hrs
Type II 24-hr 50-yr Rainfall=8.48"

	Area (sf)	CN	Description
*	23,655	98	IMPERVIOUS
	23,655		100.00% Impervious Area

Tc (min)	Length (feet)	Slope (ft/ft)	Velocity (ft/sec)	Capacity (cfs)	Description
5.0					**Direct Entry,**

Subcatchment 4S: SUBCATCHMENT 4

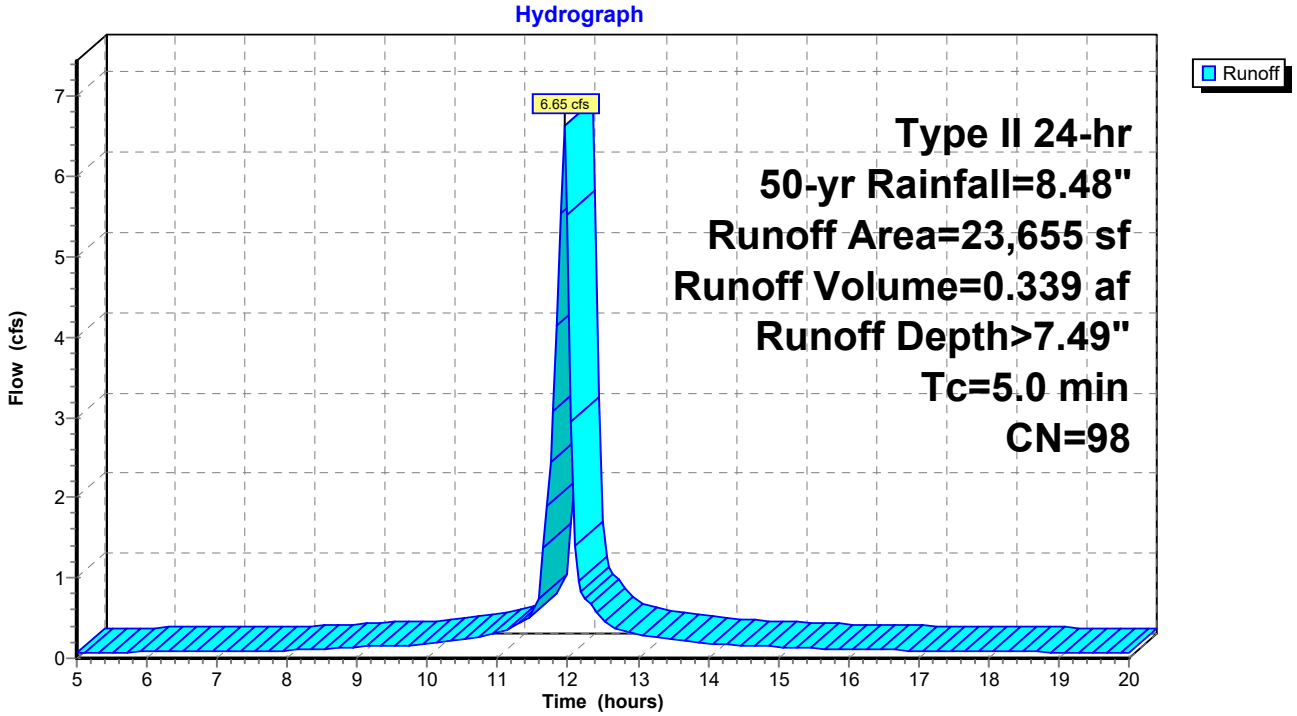

Summary for Reach SP1: SUMMATION POINT 1

Inflow Area = 0.388 ac, 97.10% Impervious, Inflow Depth > 7.46" for 50-yr event
Inflow = 4.75 cfs @ 11.95 hrs, Volume= 0.241 af
Outflow = 4.75 cfs @ 11.95 hrs, Volume= 0.241 af, Atten= 0%, Lag= 0.0 min

Routing by Stor-Ind+Trans method, Time Span= 5.00-20.00 hrs, dt= 0.05 hrs

Reach SP1: SUMMATION POINT 1

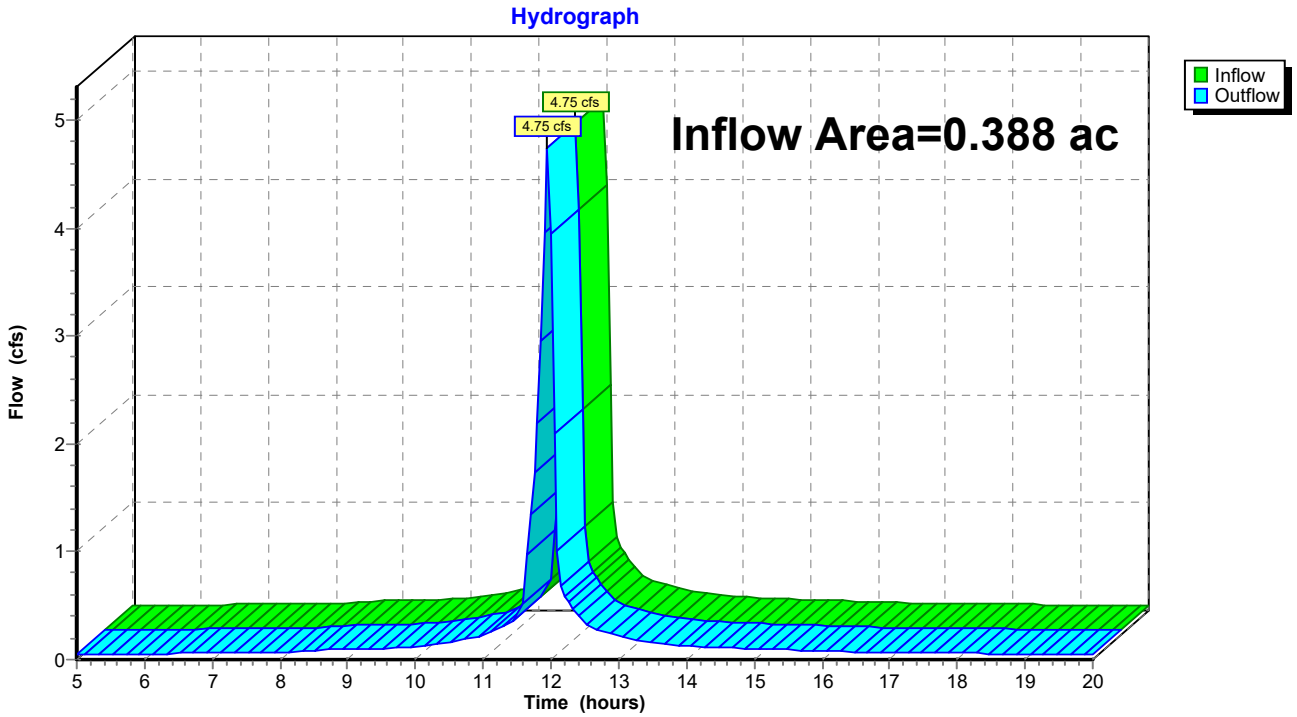

Summary for Reach SP2: SUMMATION POINT 2

Inflow Area = 0.681 ac,100.00% Impervious, Inflow Depth > 7.49" for 50-yr event
Inflow = 8.34 cfs @ 11.95 hrs, Volume= 0.425 af
Outflow = 8.34 cfs @ 11.95 hrs, Volume= 0.425 af, Atten= 0%, Lag= 0.0 min

Routing by Stor-Ind+Trans method, Time Span= 5.00-20.00 hrs, dt= 0.05 hrs

Reach SP2: SUMMATION POINT 2

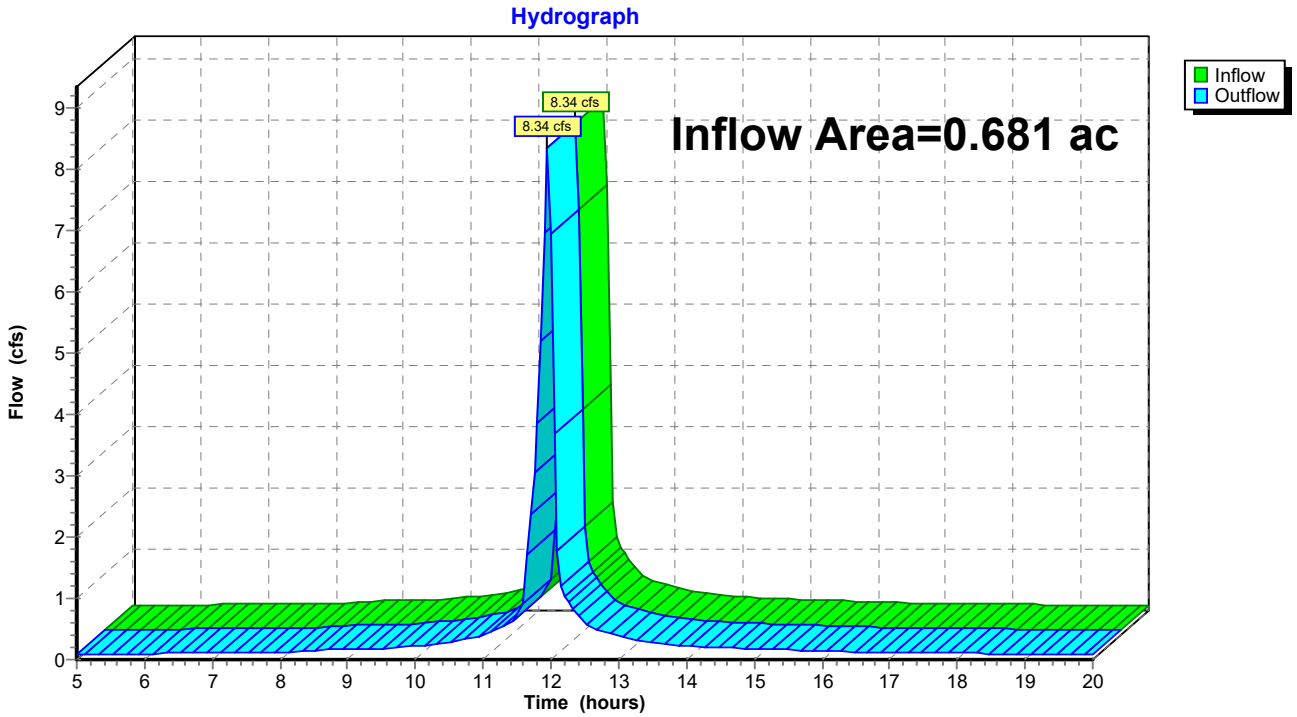

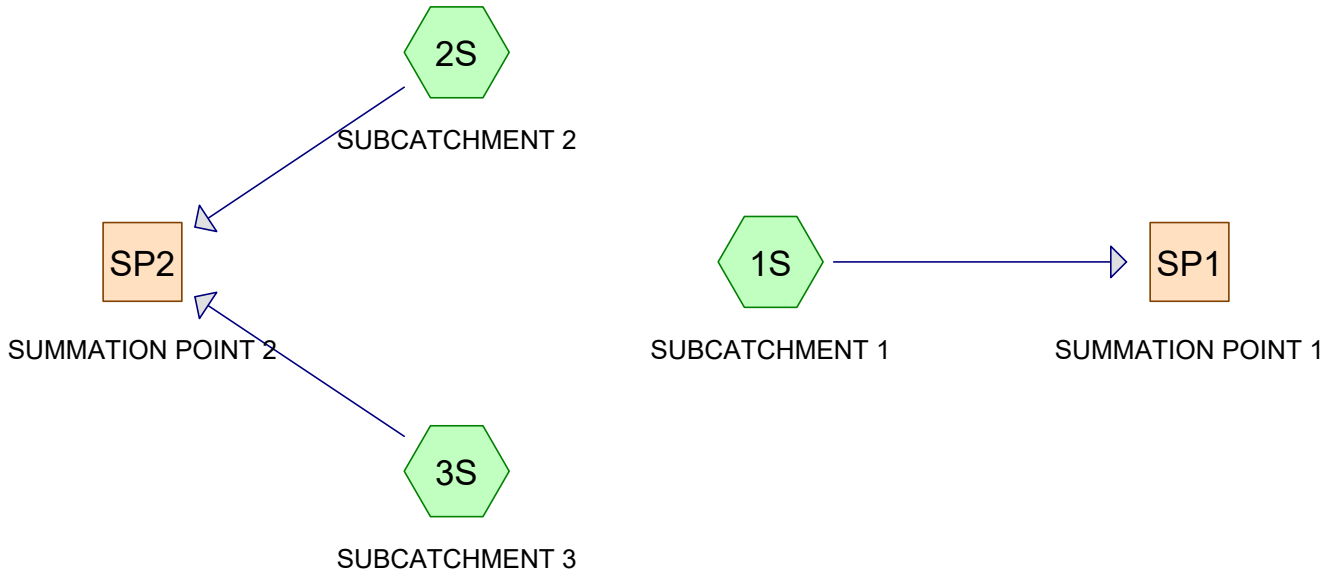

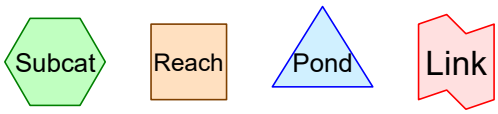

Routing Diagram for Proposed Development
Prepared by Haley Ward, Printed 11/14/2024
HydroCAD® 10.20-5c s/n 00641 © 2023 HydroCAD Software Solutions LLC

Time span=5.00-20.00 hrs, dt=0.05 hrs, 301 points
Runoff by SCS TR-20 method, UH=SCS, Weighted-CN
Reach routing by Stor-Ind+Trans method - Pond routing by Stor-Ind method

Subcatchment1S: SUBCATCHMENT1 Runoff Area=13,817 sf 100.00% Impervious Runoff Depth>3.18"
Tc=5.0 min CN=98 Runoff=1.67 cfs 0.084 af

Subcatchment2S: SUBCATCHMENT2 Runoff Area=9,118 sf 79.00% Impervious Runoff Depth>2.92"
Tc=5.0 min CN=95 Runoff=1.06 cfs 0.051 af

Subcatchment3S: SUBCATCHMENT3 Runoff Area=23,655 sf 100.00% Impervious Runoff Depth>3.18"
Tc=5.0 min CN=98 Runoff=2.86 cfs 0.144 af

Reach SP1: SUMMATION POINT 1 Inflow=1.67 cfs 0.084 af
Outflow=1.67 cfs 0.084 af

Reach SP2: SUMMATION POINT 2 Inflow=3.92 cfs 0.195 af
Outflow=3.92 cfs 0.195 af

Total Runoff Area = 1.070 ac Runoff Volume = 0.279 af Average Runoff Depth = 3.13"
4.11% Pervious = 0.044 ac 95.89% Impervious = 1.026 ac

Summary for Subcatchment 1S: SUBCATCHMENT 1

Runoff = 1.67 cfs @ 11.95 hrs, Volume= 0.084 af, Depth> 3.18"
Routed to Reach SP1 : SUMMATION POINT 1

Runoff by SCS TR-20 method, UH=SCS, Weighted-CN, Time Span= 5.00-20.00 hrs, dt= 0.05 hrs
Type II 24-hr 2-yr Rainfall=3.68"

	Area (sf)	CN	Description
*	13,817	98	IMPERVIOUS
	0	84	50-75% Grass cover, Fair, HSG D
	13,817	98	Weighted Average
	13,817		100.00% Impervious Area

Tc (min)	Length (feet)	Slope (ft/ft)	Velocity (ft/sec)	Capacity (cfs)	Description
5.0					**Direct Entry,**

Summary for Subcatchment 2S: SUBCATCHMENT 2

Runoff = 1.06 cfs @ 11.95 hrs, Volume= 0.051 af, Depth> 2.92"
Routed to Reach SP2 : SUMMATION POINT 2

Runoff by SCS TR-20 method, UH=SCS, Weighted-CN, Time Span= 5.00-20.00 hrs, dt= 0.05 hrs
Type II 24-hr 2-yr Rainfall=3.68"

	Area (sf)	CN	Description
*	7,203	98	IMPERVIOUS
	1,915	84	50-75% Grass cover, Fair, HSG D
	9,118	95	Weighted Average
	1,915		21.00% Pervious Area
	7,203		79.00% Impervious Area

Tc (min)	Length (feet)	Slope (ft/ft)	Velocity (ft/sec)	Capacity (cfs)	Description
5.0					**Direct Entry,**

Summary for Subcatchment 3S: SUBCATCHMENT 3

Runoff = 2.86 cfs @ 11.95 hrs, Volume= 0.144 af, Depth> 3.18"
Routed to Reach SP2 : SUMMATION POINT 2

Runoff by SCS TR-20 method, UH=SCS, Weighted-CN, Time Span= 5.00-20.00 hrs, dt= 0.05 hrs
Type II 24-hr 2-yr Rainfall=3.68"

	Area (sf)	CN	Description
*	23,655	98	IMPERVIOUS
	23,655		100.00% Impervious Area

Tc (min)	Length (feet)	Slope (ft/ft)	Velocity (ft/sec)	Capacity (cfs)	Description
5.0					**Direct Entry,**

Summary for Reach SP1: SUMMATION POINT 1

Inflow Area = 0.317 ac,100.00% Impervious, Inflow Depth > 3.18" for 2-yr event
Inflow = 1.67 cfs @ 11.95 hrs, Volume= 0.084 af
Outflow = 1.67 cfs @ 11.95 hrs, Volume= 0.084 af, Atten= 0%, Lag= 0.0 min

Routing by Stor-Ind+Trans method, Time Span= 5.00-20.00 hrs, dt= 0.05 hrs

Summary for Reach SP2: SUMMATION POINT 2

Inflow Area = 0.752 ac, 94.16% Impervious, Inflow Depth > 3.11" for 2-yr event
Inflow = 3.92 cfs @ 11.95 hrs, Volume= 0.195 af
Outflow = 3.92 cfs @ 11.95 hrs, Volume= 0.195 af, Atten= 0%, Lag= 0.0 min

Routing by Stor-Ind+Trans method, Time Span= 5.00-20.00 hrs, dt= 0.05 hrs

Time span=5.00-20.00 hrs, dt=0.05 hrs, 301 points
Runoff by SCS TR-20 method, UH=SCS, Weighted-CN
Reach routing by Stor-Ind+Trans method - Pond routing by Stor-Ind method

Subcatchment1S: SUBCATCHMENT1 Runoff Area=13,817 sf 100.00% Impervious Runoff Depth>4.90"
Tc=5.0 min CN=98 Runoff=2.55 cfs 0.130 af

Subcatchment2S: SUBCATCHMENT2 Runoff Area=9,118 sf 79.00% Impervious Runoff Depth>4.66"
Tc=5.0 min CN=95 Runoff=1.65 cfs 0.081 af

Subcatchment3S: SUBCATCHMENT3 Runoff Area=23,655 sf 100.00% Impervious Runoff Depth>4.90"
Tc=5.0 min CN=98 Runoff=4.37 cfs 0.222 af

Reach SP1: SUMMATION POINT 1 Inflow=2.55 cfs 0.130 af
Outflow=2.55 cfs 0.130 af

Reach SP2: SUMMATION POINT 2 Inflow=6.02 cfs 0.303 af
Outflow=6.02 cfs 0.303 af

Total Runoff Area = 1.070 ac Runoff Volume = 0.433 af Average Runoff Depth = 4.85"
4.11% Pervious = 0.044 ac 95.89% Impervious = 1.026 ac

Summary for Subcatchment 1S: SUBCATCHMENT 1

Runoff = 2.55 cfs @ 11.95 hrs, Volume= 0.130 af, Depth> 4.90"
Routed to Reach SP1 : SUMMATION POINT 1

Runoff by SCS TR-20 method, UH=SCS, Weighted-CN, Time Span= 5.00-20.00 hrs, dt= 0.05 hrs
Type II 24-hr 10-yr Rainfall=5.59"

	Area (sf)	CN	Description
*	13,817	98	IMPERVIOUS
	0	84	50-75% Grass cover, Fair, HSG D
	13,817	98	Weighted Average
	13,817		100.00% Impervious Area

Tc (min)	Length (feet)	Slope (ft/ft)	Velocity (ft/sec)	Capacity (cfs)	Description
5.0					**Direct Entry,**

Summary for Subcatchment 2S: SUBCATCHMENT 2

Runoff = 1.65 cfs @ 11.95 hrs, Volume= 0.081 af, Depth> 4.66"
Routed to Reach SP2 : SUMMATION POINT 2

Runoff by SCS TR-20 method, UH=SCS, Weighted-CN, Time Span= 5.00-20.00 hrs, dt= 0.05 hrs
Type II 24-hr 10-yr Rainfall=5.59"

	Area (sf)	CN	Description
*	7,203	98	IMPERVIOUS
	1,915	84	50-75% Grass cover, Fair, HSG D
	9,118	95	Weighted Average
	1,915		21.00% Pervious Area
	7,203		79.00% Impervious Area

Tc (min)	Length (feet)	Slope (ft/ft)	Velocity (ft/sec)	Capacity (cfs)	Description
5.0					**Direct Entry,**

Summary for Subcatchment 3S: SUBCATCHMENT 3

Runoff = 4.37 cfs @ 11.95 hrs, Volume= 0.222 af, Depth> 4.90"
Routed to Reach SP2 : SUMMATION POINT 2

Runoff by SCS TR-20 method, UH=SCS, Weighted-CN, Time Span= 5.00-20.00 hrs, dt= 0.05 hrs
Type II 24-hr 10-yr Rainfall=5.59"

	Area (sf)	CN	Description
*	23,655	98	IMPERVIOUS
	23,655		100.00% Impervious Area

Tc (min)	Length (feet)	Slope (ft/ft)	Velocity (ft/sec)	Capacity (cfs)	Description
5.0					**Direct Entry,**

Summary for Reach SP1: SUMMATION POINT 1

Inflow Area = 0.317 ac,100.00% Impervious, Inflow Depth > 4.90" for 10-yr event
Inflow = 2.55 cfs @ 11.95 hrs, Volume= 0.130 af
Outflow = 2.55 cfs @ 11.95 hrs, Volume= 0.130 af, Atten= 0%, Lag= 0.0 min

Routing by Stor-Ind+Trans method, Time Span= 5.00-20.00 hrs, dt= 0.05 hrs

Summary for Reach SP2: SUMMATION POINT 2

Inflow Area = 0.752 ac, 94.16% Impervious, Inflow Depth > 4.83" for 10-yr event
Inflow = 6.02 cfs @ 11.95 hrs, Volume= 0.303 af
Outflow = 6.02 cfs @ 11.95 hrs, Volume= 0.303 af, Atten= 0%, Lag= 0.0 min

Routing by Stor-Ind+Trans method, Time Span= 5.00-20.00 hrs, dt= 0.05 hrs

Time span=5.00-20.00 hrs, dt=0.05 hrs, 301 points
Runoff by SCS TR-20 method, UH=SCS, Weighted-CN
Reach routing by Stor-Ind+Trans method - Pond routing by Stor-Ind method

Subcatchment1S: SUBCATCHMENT1 Runoff Area=13,817 sf 100.00% Impervious Runoff Depth>6.24"
Tc=5.0 min CN=98 Runoff=3.24 cfs 0.165 af

Subcatchment2S: SUBCATCHMENT2 Runoff Area=9,118 sf 79.00% Impervious Runoff Depth>6.02"
Tc=5.0 min CN=95 Runoff=2.11 cfs 0.105 af

Subcatchment3S: SUBCATCHMENT3 Runoff Area=23,655 sf 100.00% Impervious Runoff Depth>6.24"
Tc=5.0 min CN=98 Runoff=5.55 cfs 0.282 af

Reach SP1: SUMMATION POINT 1 Inflow=3.24 cfs 0.165 af
Outflow=3.24 cfs 0.165 af

Reach SP2: SUMMATION POINT 2 Inflow=7.65 cfs 0.387 af
Outflow=7.65 cfs 0.387 af

Total Runoff Area = 1.070 ac Runoff Volume = 0.552 af Average Runoff Depth = 6.19"
4.11% Pervious = 0.044 ac 95.89% Impervious = 1.026 ac

Summary for Subcatchment 1S: SUBCATCHMENT 1

Runoff = 3.24 cfs @ 11.95 hrs, Volume= 0.165 af, Depth> 6.24"
Routed to Reach SP1 : SUMMATION POINT 1

Runoff by SCS TR-20 method, UH=SCS, Weighted-CN, Time Span= 5.00-20.00 hrs, dt= 0.05 hrs
Type II 24-hr 25-yr Rainfall=7.08"

	Area (sf)	CN	Description
*	13,817	98	IMPERVIOUS
	0	84	50-75% Grass cover, Fair, HSG D
	13,817	98	Weighted Average
	13,817		100.00% Impervious Area

Tc (min)	Length (feet)	Slope (ft/ft)	Velocity (ft/sec)	Capacity (cfs)	Description
5.0					**Direct Entry,**

Summary for Subcatchment 2S: SUBCATCHMENT 2

Runoff = 2.11 cfs @ 11.95 hrs, Volume= 0.105 af, Depth> 6.02"
Routed to Reach SP2 : SUMMATION POINT 2

Runoff by SCS TR-20 method, UH=SCS, Weighted-CN, Time Span= 5.00-20.00 hrs, dt= 0.05 hrs
Type II 24-hr 25-yr Rainfall=7.08"

	Area (sf)	CN	Description
*	7,203	98	IMPERVIOUS
	1,915	84	50-75% Grass cover, Fair, HSG D
	9,118	95	Weighted Average
	1,915		21.00% Pervious Area
	7,203		79.00% Impervious Area

Tc (min)	Length (feet)	Slope (ft/ft)	Velocity (ft/sec)	Capacity (cfs)	Description
5.0					**Direct Entry,**

Summary for Subcatchment 3S: SUBCATCHMENT 3

Runoff = 5.55 cfs @ 11.95 hrs, Volume= 0.282 af, Depth> 6.24"
Routed to Reach SP2 : SUMMATION POINT 2

Runoff by SCS TR-20 method, UH=SCS, Weighted-CN, Time Span= 5.00-20.00 hrs, dt= 0.05 hrs
Type II 24-hr 25-yr Rainfall=7.08"

	Area (sf)	CN	Description
*	23,655	98	IMPERVIOUS
	23,655		100.00% Impervious Area

Tc (min)	Length (feet)	Slope (ft/ft)	Velocity (ft/sec)	Capacity (cfs)	Description
5.0					**Direct Entry,**

Summary for Reach SP1: SUMMATION POINT 1

Inflow Area = 0.317 ac,100.00% Impervious, Inflow Depth > 6.24" for 25-yr event
Inflow = 3.24 cfs @ 11.95 hrs, Volume= 0.165 af
Outflow = 3.24 cfs @ 11.95 hrs, Volume= 0.165 af, Atten= 0%, Lag= 0.0 min

Routing by Stor-Ind+Trans method, Time Span= 5.00-20.00 hrs, dt= 0.05 hrs

Summary for Reach SP2: SUMMATION POINT 2

Inflow Area = 0.752 ac, 94.16% Impervious, Inflow Depth > 6.18" for 25-yr event
Inflow = 7.65 cfs @ 11.95 hrs, Volume= 0.387 af
Outflow = 7.65 cfs @ 11.95 hrs, Volume= 0.387 af, Atten= 0%, Lag= 0.0 min

Routing by Stor-Ind+Trans method, Time Span= 5.00-20.00 hrs, dt= 0.05 hrs

Time span=5.00-20.00 hrs, dt=0.05 hrs, 301 points
Runoff by SCS TR-20 method, UH=SCS, Weighted-CN
Reach routing by Stor-Ind+Trans method - Pond routing by Stor-Ind method

Subcatchment1S: SUBCATCHMENT1 Runoff Area=13,817 sf 100.00% Impervious Runoff Depth>7.49"
Tc=5.0 min CN=98 Runoff=3.88 cfs 0.198 af

Subcatchment2S: SUBCATCHMENT2 Runoff Area=9,118 sf 79.00% Impervious Runoff Depth>7.29"
Tc=5.0 min CN=95 Runoff=2.54 cfs 0.127 af

Subcatchment3S: SUBCATCHMENT3 Runoff Area=23,655 sf 100.00% Impervious Runoff Depth>7.49"
Tc=5.0 min CN=98 Runoff=6.65 cfs 0.339 af

Reach SP1: SUMMATION POINT 1 Inflow=3.88 cfs 0.198 af
Outflow=3.88 cfs 0.198 af

Reach SP2: SUMMATION POINT 2 Inflow=9.19 cfs 0.466 af
Outflow=9.19 cfs 0.466 af

Total Runoff Area = 1.070 ac Runoff Volume = 0.664 af Average Runoff Depth = 7.45"
4.11% Pervious = 0.044 ac 95.89% Impervious = 1.026 ac

Summary for Subcatchment 1S: SUBCATCHMENT 1

Runoff = 3.88 cfs @ 11.95 hrs, Volume= 0.198 af, Depth> 7.49"
Routed to Reach SP1 : SUMMATION POINT 1

Runoff by SCS TR-20 method, UH=SCS, Weighted-CN, Time Span= 5.00-20.00 hrs, dt= 0.05 hrs
Type II 24-hr 50-yr Rainfall=8.48"

	Area (sf)	CN	Description
*	13,817	98	IMPERVIOUS
	0	84	50-75% Grass cover, Fair, HSG D
	13,817	98	Weighted Average
	13,817		100.00% Impervious Area

Tc (min)	Length (feet)	Slope (ft/ft)	Velocity (ft/sec)	Capacity (cfs)	Description
5.0					**Direct Entry,**

Subcatchment 1S: SUBCATCHMENT 1

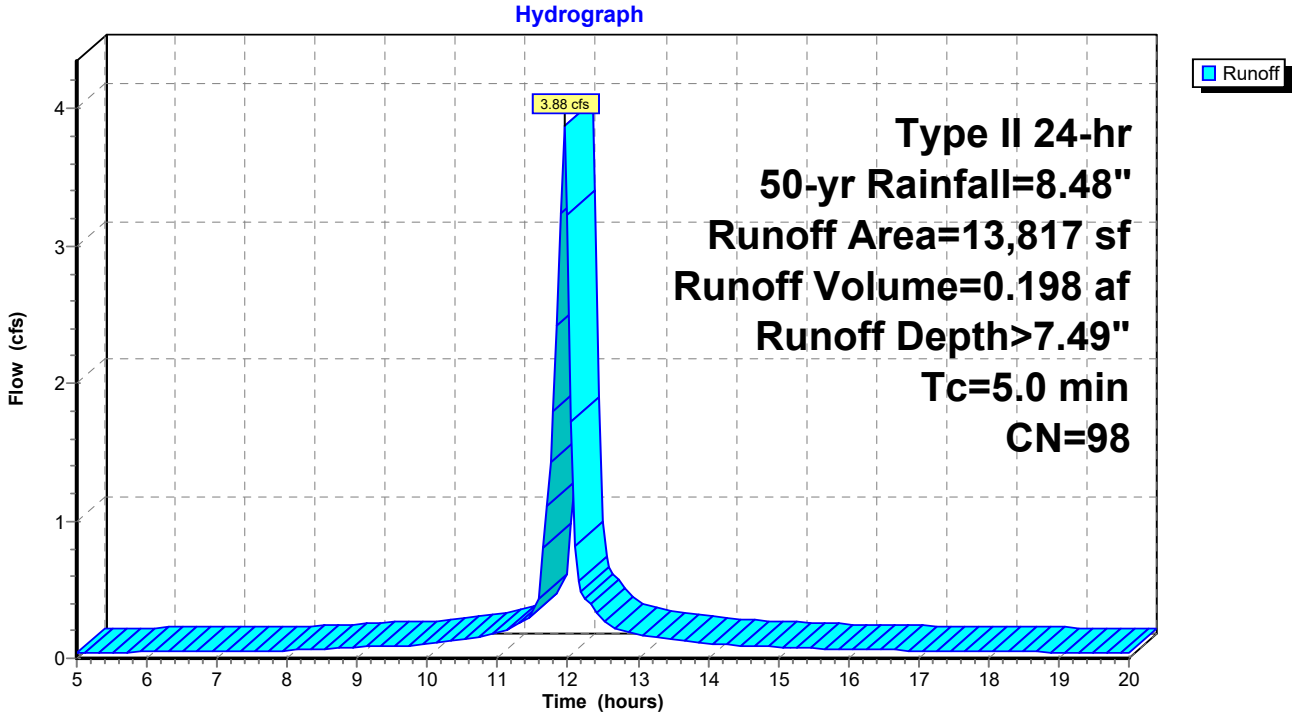

Summary for Subcatchment 2S: SUBCATCHMENT 2

Runoff = 2.54 cfs @ 11.95 hrs, Volume= 0.127 af, Depth> 7.29"
Routed to Reach SP2 : SUMMATION POINT 2

Runoff by SCS TR-20 method, UH=SCS, Weighted-CN, Time Span= 5.00-20.00 hrs, dt= 0.05 hrs
Type II 24-hr 50-yr Rainfall=8.48"

	Area (sf)	CN	Description
*	7,203	98	IMPERVIOUS
	1,915	84	50-75% Grass cover, Fair, HSG D
	9,118	95	Weighted Average
	1,915		21.00% Pervious Area
	7,203		79.00% Impervious Area

Tc (min)	Length (feet)	Slope (ft/ft)	Velocity (ft/sec)	Capacity (cfs)	Description
5.0					**Direct Entry,**

Subcatchment 2S: SUBCATCHMENT 2

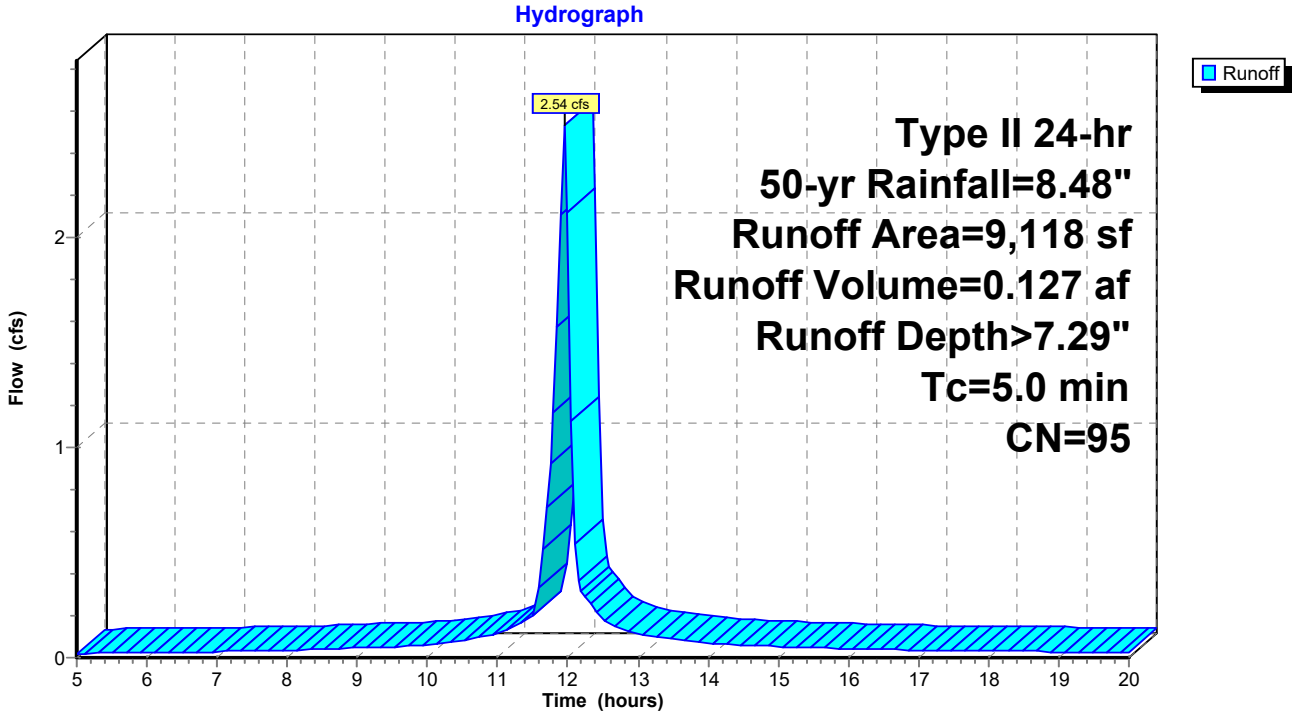

Summary for Subcatchment 3S: SUBCATCHMENT 3

Runoff = 6.65 cfs @ 11.95 hrs, Volume= 0.339 af, Depth> 7.49"
Routed to Reach SP2 : SUMMATION POINT 2

Runoff by SCS TR-20 method, UH=SCS, Weighted-CN, Time Span= 5.00-20.00 hrs, dt= 0.05 hrs
Type II 24-hr 50-yr Rainfall=8.48"

	Area (sf)	CN	Description
*	23,655	98	IMPERVIOUS
	23,655		100.00% Impervious Area

Tc (min)	Length (feet)	Slope (ft/ft)	Velocity (ft/sec)	Capacity (cfs)	Description
5.0					**Direct Entry,**

Subcatchment 3S: SUBCATCHMENT 3

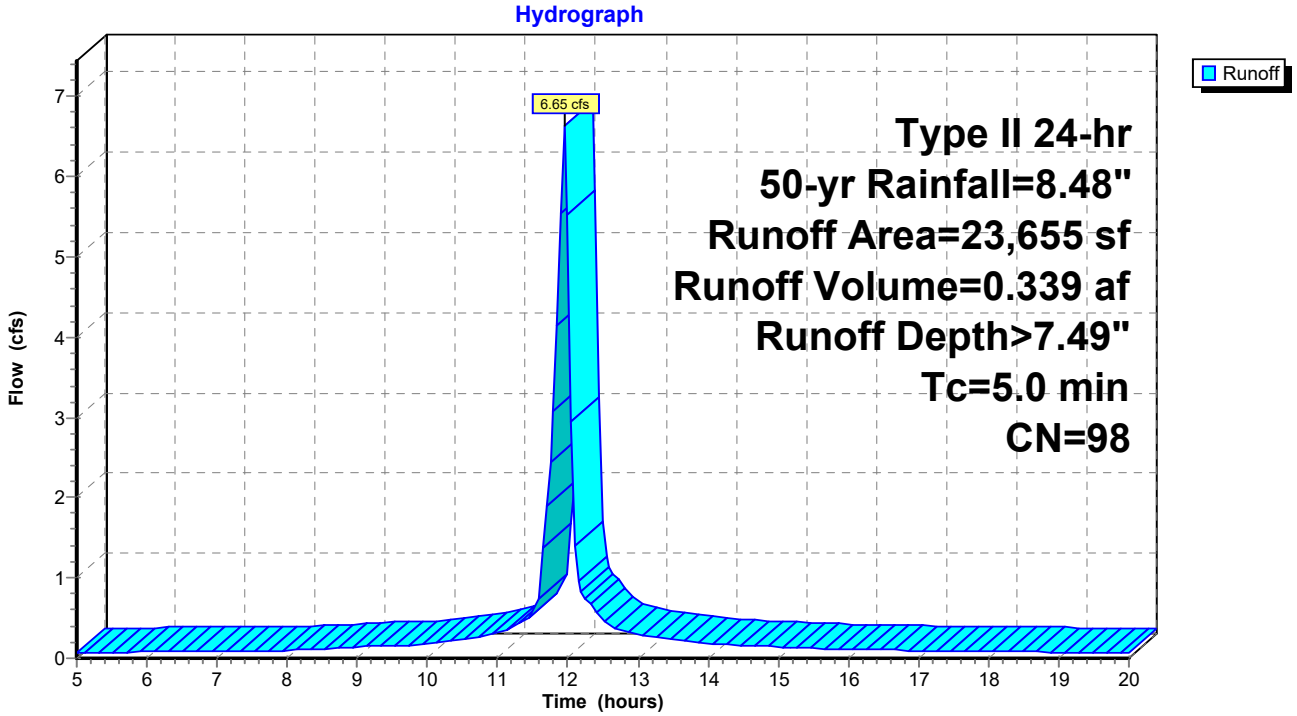

Summary for Reach SP1: SUMMATION POINT 1

Inflow Area = 0.317 ac,100.00% Impervious, Inflow Depth > 7.49" for 50-yr event
Inflow = 3.88 cfs @ 11.95 hrs, Volume= 0.198 af
Outflow = 3.88 cfs @ 11.95 hrs, Volume= 0.198 af, Atten= 0%, Lag= 0.0 min

Routing by Stor-Ind+Trans method, Time Span= 5.00-20.00 hrs, dt= 0.05 hrs

Reach SP1: SUMMATION POINT 1

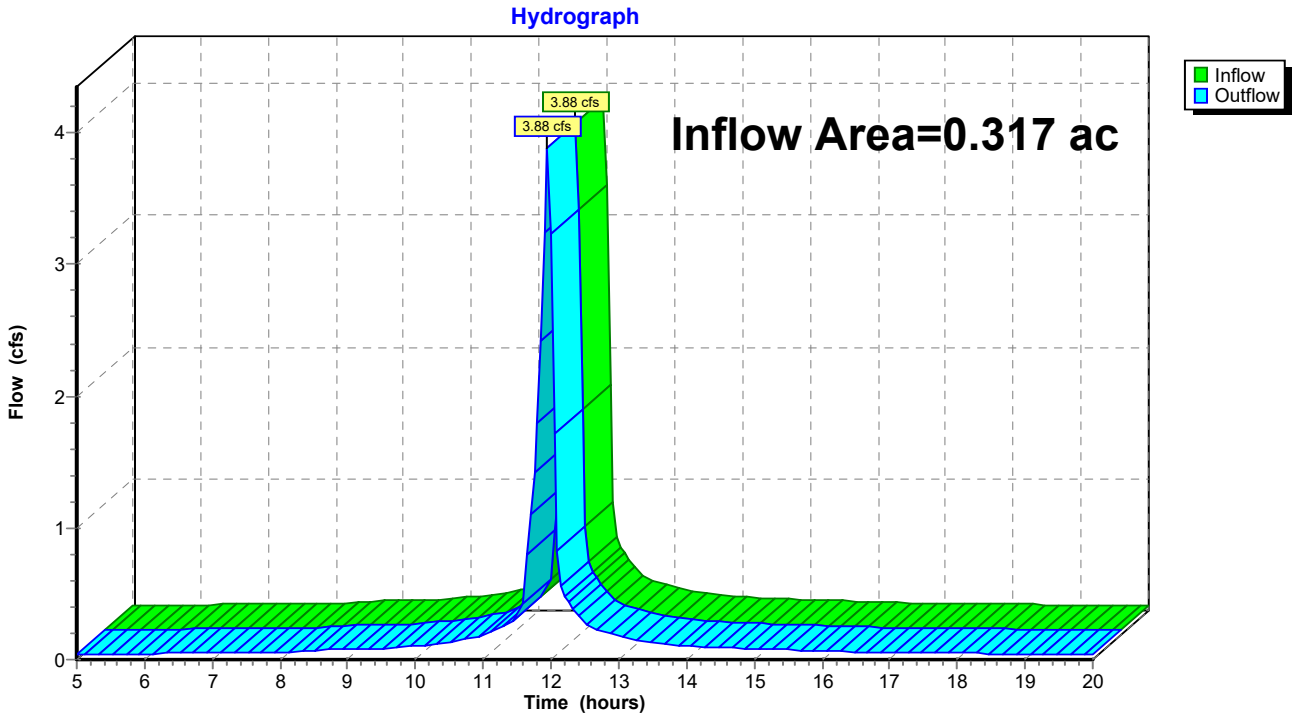

Summary for Reach SP2: SUMMATION POINT 2

Inflow Area = 0.752 ac, 94.16% Impervious, Inflow Depth > 7.43" for 50-yr event
Inflow = 9.19 cfs @ 11.95 hrs, Volume= 0.466 af
Outflow = 9.19 cfs @ 11.95 hrs, Volume= 0.466 af, Atten= 0%, Lag= 0.0 min

Routing by Stor-Ind+Trans method, Time Span= 5.00-20.00 hrs, dt= 0.05 hrs

Reach SP2: SUMMATION POINT 2

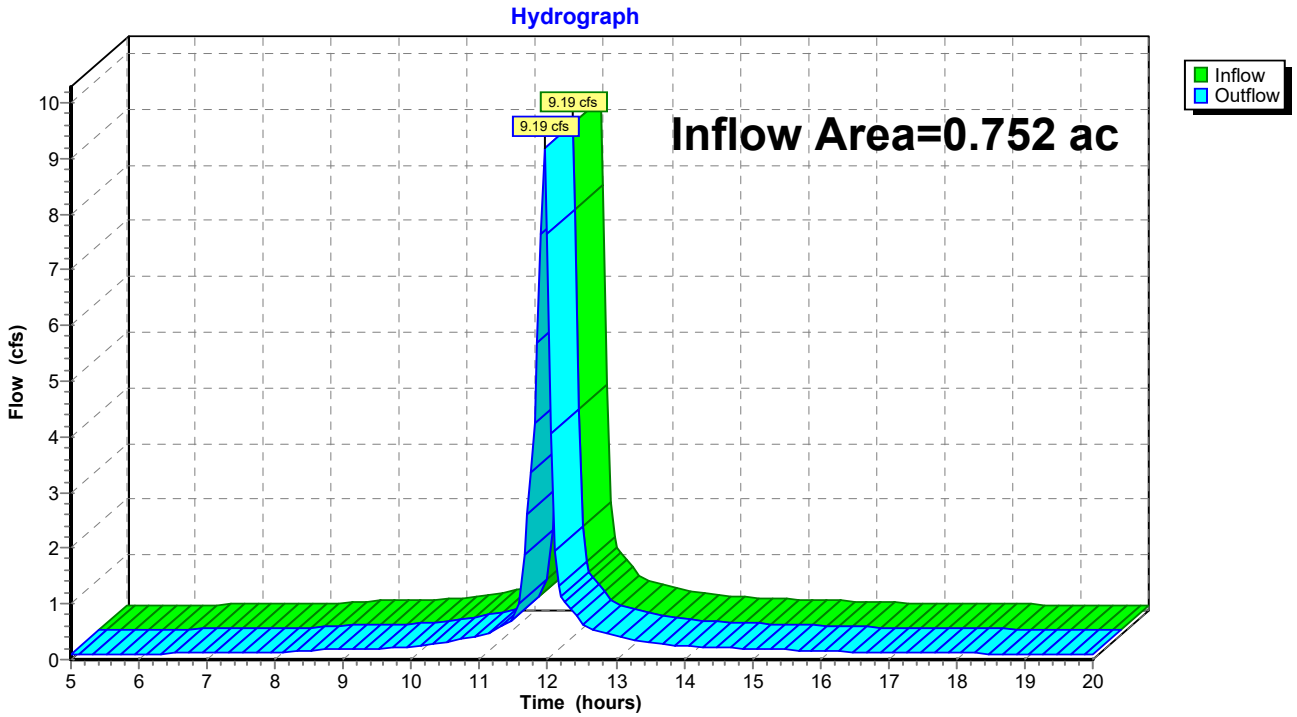

Extreme Precipitation Tables

Northeast Regional Climate Center

Data represents point estimates calculated from partial duration series. All precipitation amounts are displayed in inches.

Smoothing	Yes
State	New Hampshire
Location	
Longitude	70.758 degrees West
Latitude	43.077 degrees North
Elevation	0 feet
Date/Time	Tue, 01 Feb 2022 09:49:16 -0500

Extreme Precipitation Estimates

	5min	10min	15min	30min	60min	120min		1hr	2hr	3hr	6hr	12hr	24hr	48hr		1day	2day	4day	7day	10day	
1yr	0.26	0.40	0.50	0.65	0.81	1.04	**1yr**	0.70	0.98	1.21	1.56	2.03	2.65	2.92	**1yr**	2.35	2.81	3.22	3.94	4.54	**1yr**
2yr	0.32	0.50	0.62	0.81	1.02	1.30	**2yr**	0.88	1.18	1.52	1.94	2.48	3.20	3.57	**2yr**	2.84	3.43	3.93	4.67	5.32	**2yr**
5yr	0.37	0.58	0.73	0.97	1.25	1.61	**5yr**	1.08	1.47	1.89	2.43	3.14	4.06	4.57	**5yr**	3.59	4.40	5.03	5.93	6.69	**5yr**
10yr	0.41	0.65	0.82	1.11	1.45	1.89	**10yr**	1.25	1.73	2.23	2.89	3.74	4.86	5.52	**10yr**	4.30	5.31	6.07	7.09	7.96	**10yr**
25yr	0.48	0.76	0.97	1.34	1.77	2.34	**25yr**	1.53	2.14	2.78	3.63	4.73	6.16	7.09	**25yr**	5.45	6.81	7.79	9.00	10.03	**25yr**
50yr	0.54	0.86	1.10	1.54	2.07	2.76	**50yr**	1.79	2.53	3.29	4.32	5.65	7.37	8.57	**50yr**	6.52	8.24	9.40	10.79	11.95	**50yr**
100yr	0.60	0.97	1.25	1.77	2.42	3.26	**100yr**	2.09	2.98	3.90	5.15	6.76	8.83	10.36	**100yr**	7.81	9.96	11.35	12.93	14.24	**100yr**
200yr	0.67	1.10	1.43	2.05	2.82	3.83	**200yr**	2.44	3.51	4.61	6.12	8.07	10.58	12.52	**200yr**	9.36	12.04	13.72	15.50	16.97	**200yr**
500yr	0.80	1.31	1.71	2.48	3.48	4.76	**500yr**	3.00	4.38	5.76	7.70	10.20	13.44	16.10	**500yr**	11.90	15.48	17.62	19.72	21.43	**500yr**

Lower Confidence Limits

	5min	10min	15min	30min	60min	120min		1hr	2hr	3hr	6hr	12hr	24hr	48hr		1day	2day	4day	7day	10day	
1yr	0.23	0.36	0.44	0.59	0.73	0.88	**1yr**	0.63	0.86	0.93	1.33	1.68	2.23	2.47	**1yr**	1.98	2.38	2.86	3.19	3.89	**1yr**
2yr	0.31	0.49	0.60	0.81	1.00	1.19	**2yr**	0.86	1.16	1.37	1.82	2.34	3.05	3.44	**2yr**	2.70	3.31	3.82	4.54	5.08	**2yr**
5yr	0.35	0.54	0.67	0.92	1.17	1.40	**5yr**	1.01	1.37	1.61	2.12	2.73	3.78	4.17	**5yr**	3.34	4.01	4.71	5.52	6.22	**5yr**
10yr	0.38	0.59	0.73	1.02	1.32	1.60	**10yr**	1.14	1.56	1.80	2.39	3.06	4.36	4.84	**10yr**	3.86	4.65	5.42	6.39	7.17	**10yr**
25yr	0.44	0.67	0.83	1.18	1.56	1.90	**25yr**	1.35	1.86	2.10	2.75	3.53	4.71	5.86	**25yr**	4.17	5.63	6.61	7.75	8.64	**25yr**
50yr	0.48	0.73	0.91	1.31	1.76	2.16	**50yr**	1.52	2.12	2.34	3.07	3.92	5.32	6.75	**50yr**	4.71	6.50	7.67	8.99	9.97	**50yr**
100yr	0.53	0.81	1.01	1.46	2.00	2.47	**100yr**	1.73	2.41	2.62	3.41	4.34	5.98	7.79	**100yr**	5.30	7.49	8.89	10.43	11.50	**100yr**
200yr	0.59	0.89	1.12	1.63	2.27	2.81	**200yr**	1.96	2.75	2.93	3.78	4.78	6.71	8.97	**200yr**	5.93	8.63	10.30	12.13	13.29	**200yr**
500yr	0.68	1.01	1.31	1.90	2.70	3.36	**500yr**	2.33	3.28	3.41	4.31	5.43	7.80	10.82	**500yr**	6.90	10.41	12.52	14.82	16.09	**500yr**

Upper Confidence Limits

	5min	10min	15min	30min	60min	120min		1hr	2hr	3hr	6hr	12hr	24hr	48hr		1day	2day	4day	7day	10day	
1yr	0.28	0.44	0.54	0.72	0.89	1.08	**1yr**	0.77	1.06	1.26	1.74	2.20	2.98	3.16	**1yr**	2.63	3.04	3.57	4.37	5.03	**1yr**
2yr	0.34	0.52	0.64	0.86	1.07	1.27	**2yr**	0.92	1.24	1.48	1.96	2.52	3.42	3.70	**2yr**	3.02	3.56	4.09	4.84	5.62	**2yr**
5yr	0.40	0.62	0.76	1.05	1.34	1.62	**5yr**	1.15	1.58	1.88	2.54	3.25	4.33	4.96	**5yr**	3.84	4.77	5.37	6.37	7.15	**5yr**
10yr	0.47	0.72	0.89	1.24	1.61	1.98	**10yr**	1.39	1.93	2.28	3.11	3.96	5.33	6.21	**10yr**	4.72	5.97	6.83	7.84	8.75	**10yr**
25yr	0.58	0.88	1.09	1.56	2.05	2.57	**25yr**	1.77	2.51	2.96	4.07	5.16	7.76	8.35	**25yr**	6.87	8.03	9.17	10.34	11.41	**25yr**
50yr	0.67	1.02	1.27	1.83	2.46	3.13	**50yr**	2.12	3.06	3.60	5.00	6.33	9.71	10.48	**50yr**	8.60	10.08	11.48	12.73	13.97	**50yr**
100yr	0.79	1.19	1.50	2.16	2.96	3.81	**100yr**	2.56	3.73	4.38	6.16	7.78	12.15	13.14	**100yr**	10.75	12.64	14.37	15.71	17.10	**100yr**
200yr	0.92	1.39	1.76	2.55	3.56	4.65	**200yr**	3.07	4.55	5.34	7.59	9.56	15.24	16.50	**200yr**	13.49	15.86	18.02	19.37	20.93	**200yr**
500yr	1.15	1.71	2.20	3.19	4.54	6.04	**500yr**	3.92	5.90	6.94	10.03	12.60	20.59	22.29	**500yr**	18.23	21.44	24.31	25.55	27.36	**500yr**

Powered by ACIS
Northeast Regional Climate Center

HALEY WARD

INSPECTION & LONG-TERM MAINTENANCE PLAN FOR
MIXED-USE DEVELOPMENT

1-15 CONGRESS STREET
PORTSMOUTH, NH

Introduction

The intent of this plan is to provide One Market Square, LLC (herein referred to as the "Owner") with a list of procedures that document the inspection and maintenance requirements of the stormwater management system for proposed development at 1-15 Congress Street. Specifically, the proposed roof drain filters (collectively referred to as the "Stormwater Management System"). The contact information for the owner shall be kept current, and if there is a change of ownership of the property this plan must be transferred to the new owner.

The following inspection and maintenance program is necessary to keep the stormwater management system functioning properly and will help maintain a high quality of stormwater runoff to minimize potential environmental impacts. By following the enclosed procedures, the owner will be able to maintain the functional design of the stormwater management system and maximize its ability to remove sediment and other contaminants from site generated stormwater runoff.

Construction Inspections

During the construction period, inspections shall be conducted at least once every seven (7) calendar days or once every 14 calendar days and within 24 hours of the end of a storm event of 0.5 inch or greater.

Annual Report

Following construction, the owner shall prepare an annual Inspection & Maintenance Report. The report shall include a summary of the system's maintenance and repair by transmission of the Inspection & Maintenance Log and other information as required. A copy of the report shall be delivered annually to the Portsmouth DPW, if required.

Inspection & Maintenance Checklist/Log

The following pages contain the Stormwater Management System Inspection & Maintenance Requirements and a blank copy of the Stormwater Management System Inspection & Maintenance Log. These forms are provided to the owner as a guideline for performing the inspection and maintenance of the Stormwater Management System. This is a guideline and should be periodically reviewed for conformance with current practice and standards.

Stormwater Management System Components

The Stormwater Management System is designed to mitigate the quality of site-generated stormwater runoff. As a result, the design includes the following elements:

Non-Structural BMPs

Non-Structural best management practices (BMP's) include temporary and permanent measures that typically require less labor and capital inputs and are intended to provide protection against erosion of soils. Examples of non-structural BMP's on this project may include but are not limited to:

- Dust control
- Sediment barriers
- Stabilized construction entrance
- Catch basin basket
- Dewatering control

Structural BMPs

Structural BMPs are more labor and capital-intensive structures or installations that require more specialized personnel to install. Examples on this project include but are not limited to:

- Bio Clean Downspout Filter
- Closed Drainage System

Inspection and Maintenance Requirements

The following summarizes the inspection and maintenance requirements for the various BMP's that may be found on this project.

1. Bio Clean Downspout Filter: Refer to the manufacturer's Operation and Maintenance manual for guidance, included herewith.
2. Storm Drains: Monitor accumulation of debris in drainage structures monthly or after significant rain events. Remove sediments when they accumulate within the outlet pipe. During construction, maintain inlet protection until all areas have been stabilized. Prior to the end of construction, inspect the drains and basins for accumulations and remove and clean by jet- vacuuming.

Pollution Prevention

The following pollution prevention activities shall be undertaken to minimize potential impacts on stormwater runoff quality. The Contractor is responsible for all activities during construction. The Owner is responsible thereafter.

Spill Procedures

Any discharge of waste oil or other pollutant shall be reported immediately to the New Hampshire Department of Environmental Services (NHDES). The Contractor/Owner will be responsible for any incident of groundwater contamination resulting from the improper discharge of pollutants to the stormwater system, and may be required by NHDES to remediate incidents that may impact groundwater quality. If the property ownership is transferred, the new owner will be informed of the legal responsibilities associated with operation of the stormwater system, as indicated above.

Sanitary Facilities

Sanitary facilities shall be provided during all phases of construction.

Material Storage

The contractors are required to remove trash from the site. Hazardous material storage is prohibited. Salt and other de-icing materials must remain under covered storage. Salt storage areas shall be covered using permanent or semi-permanent measures and loading/offloading areas shall be located and designed to not drain directly to receiving waters and be maintained with good housekeeping measures in accordance with NHDES guidance documents. Snow will not be stored onsite – it will be removed from the site by a licensed contractor as needed. There are no wetlands, waterbodies, or other protected natural resources directly adjacent to the development area. Down-gradient stormwater structures will be protected as outlined in this

document.

Material Disposal

All waste material, trash, sediment, and debris shall be removed from the site and disposed of in accordance with applicable local, state, and federal guidelines and regulations. Removed sediments shall be if necessary dewatered prior to disposal.

Downspout Filter

PROVEN STORMWATER TREATMENT TECHNOLOGY

Bio Clean
A Forterra Company

Overview

The Bio Clean Downspout Filter is the industry's leading solution for treatment of roof runoff. This technology is used to treat commercial and industrial roof tops along with highrise buildings, parking structures and residential buildings.

Available in 3 sizes, this filter can easily adapt to downspouts 2" to 12" in diameter. The filter comes standard with rubber boots that allow for easy installation to the downspout.

Proven since 2003, the Bio Clean Downspout Filter has been used on hundreds of installations throughout the United States. All internal components are constructed of stainless steel.

The sleek in-line design allows the filter to be used in tight spaces. Approved by the IAPMO, this filter can meet all your needs.

Advantages

- 10 Year Warranty
- No Nets or Geofabrics
- Sleek In-Line Design
- High Treatment Flow Rate
- High Bypass Flow Rate
- Low Cost

Performance

- 93% Removal of TSS
- 87% Removal of Hydrocarbons
- Effective at Removing Metals, Nutrients and Bacteria (Media Type)

Specifications

Model #	Inlet ID (dia., in.)	Filter OD (dia., in.)	Storage Cap. (cu. ft.)	Filtered Flow (gpm)	Bypass Flow (gpm)
BC-DF4	4	6.625	.09	249	566
BC-DF6	6	8.625	0.21	509	1006
BC-DF8	8	8.625	0.21	509	1006
BC-DF10	10	12.75	0.77	1145	2264
BC-DF12	12	12.75	0.77	1145	2264

www.BioCleanEnvironmental.com

Downspout Filter

PROVEN STORMWATER TREATMENT TECHNOLOGY

Operation

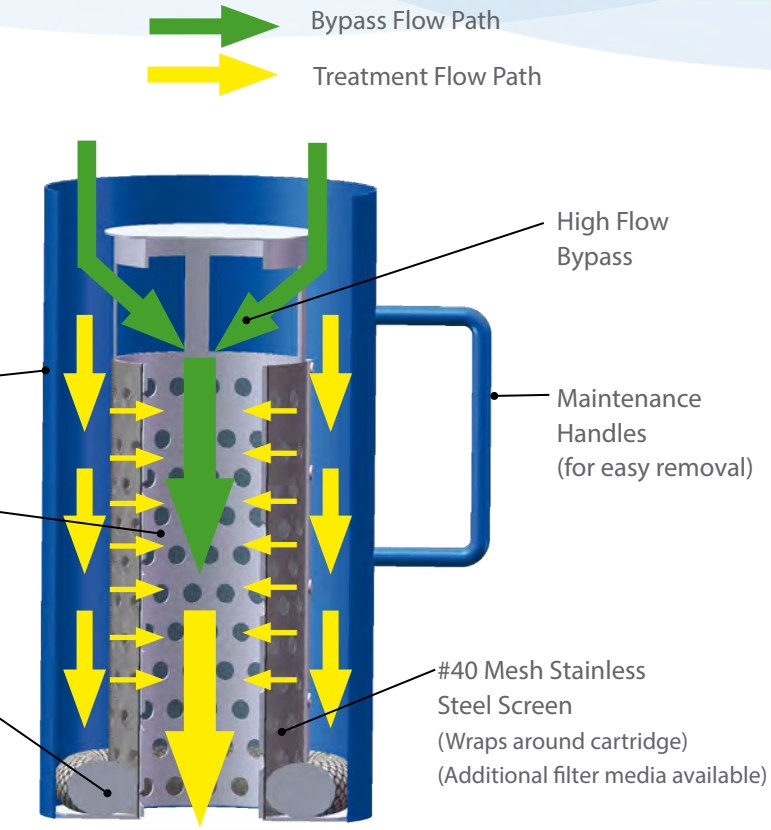

Application

Easily adapts to square or rectangular downspouts

- Commercial
- Residential
- Parking Structures
- Mixed Use

Fits In-line with iron, steel or plastic pipe

Approvals

IAPMO Testing & Approval Listing

Installation & Maintenance

See Our Website for Installation & Maintenance Manuals at:
www.BioCleanEnvironmental.com/products/downspout

398 Via El Centro
Oceanside, CA 92058
p 760.433.7640 f 760.433.3176
www.BioCleanEnvironmental.com

Bio Clean
A Forterra Company

SERVICE MANUAL
(Cleaning Procedures)

Bio Clean DOWNSPOUT FILTER
Screen Type With Hydrocarbon Boom

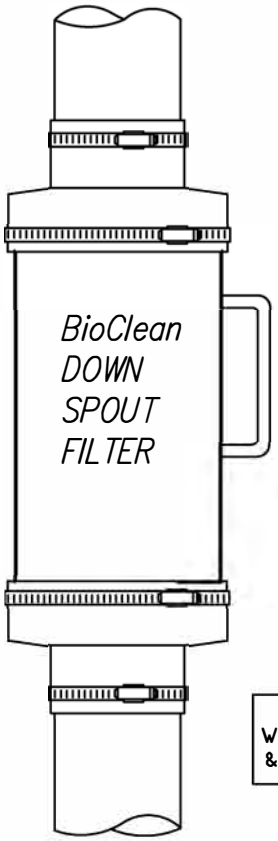

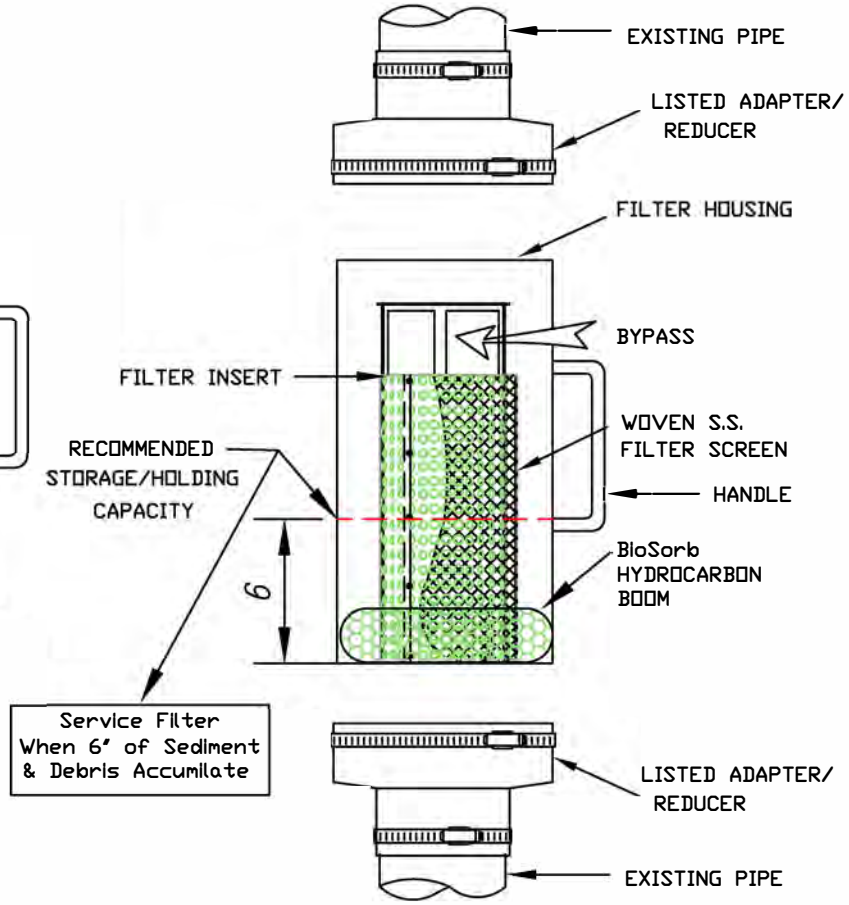

DETAIL OF PARTS

TOOLS AND EQUIPMENT NEEDED:

1. Medium size flat scred driver
2. BioSorb hydrocarbon boom. 25-1/2" X 2" dia.
   (Call Bio Clean to order)
3. Trash container or bag
4. Wooden dowel approx. 3' x 1/2' dia.

Bio Clean
A Forterra Company

P.O. BOX 869, Oceanside, Ca. 92049
(760) 433-7640 Fax (760) 433-3176
www.biocleanenvironmental.net

Bio Clean
A Forterra Company

P.O. BOX 869, Oceanside, Ca. 92049
(760) 433-7640 Fax (760) 433-3176
www.bioclean environmental.net

REMOVING FILTER

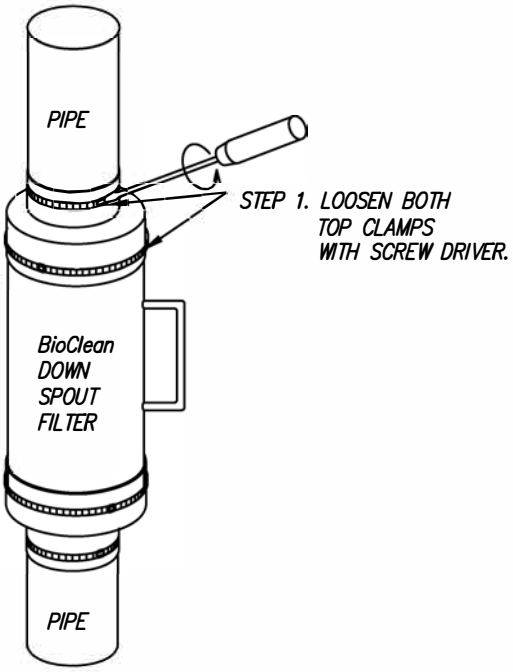

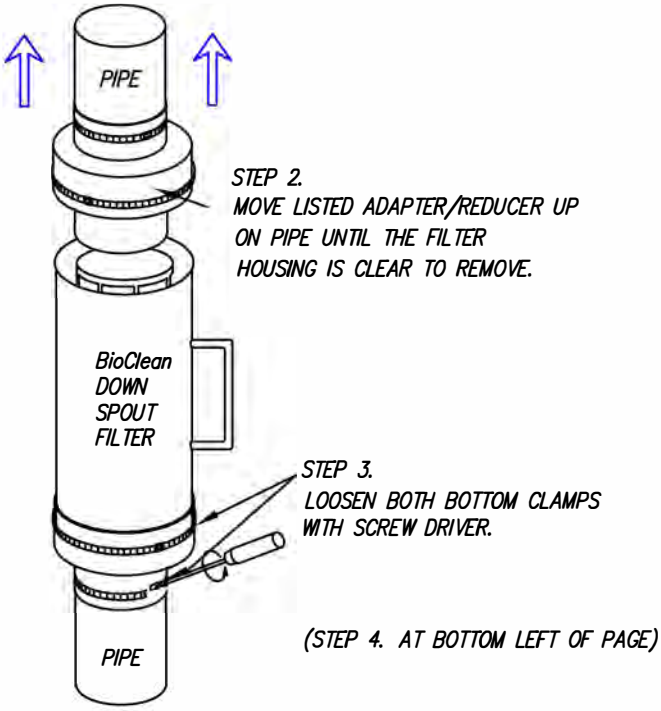

(STEP 4. AT BOTTOM LEFT OF PAGE)

CLEANING FILTER

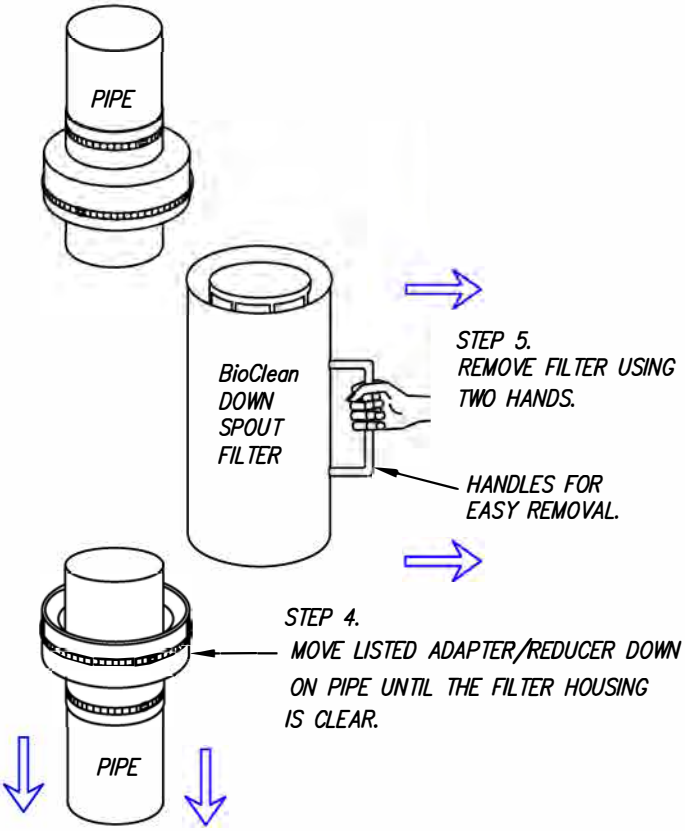

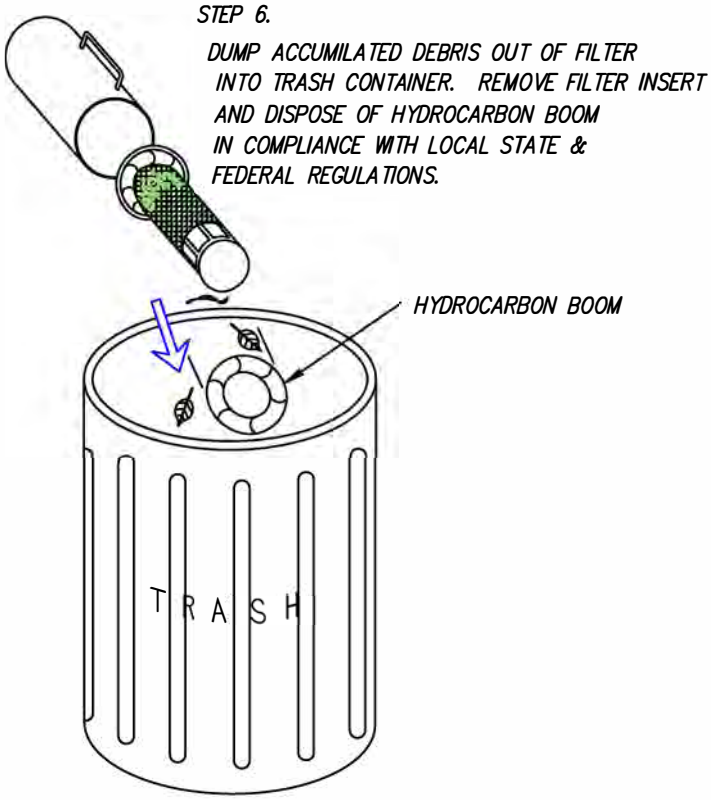

Bio Clean
A Forterra Company
P.O. BOX 869, Oceanside, Ca. 92049
(760) 433-7640 Fax (760) 433-3176
www.biocleanenvironmental.net

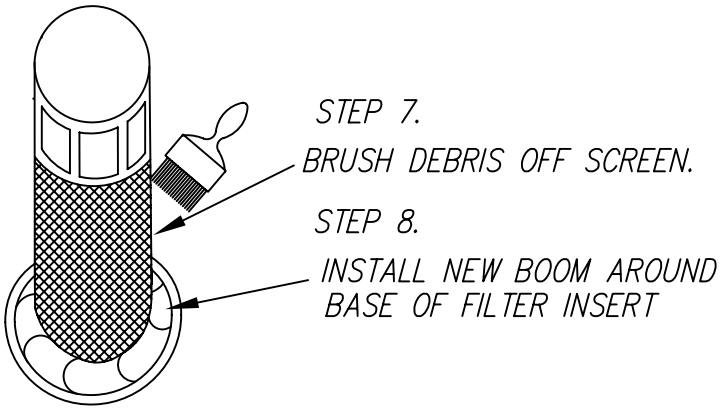

REPLACING FILTER INSERT

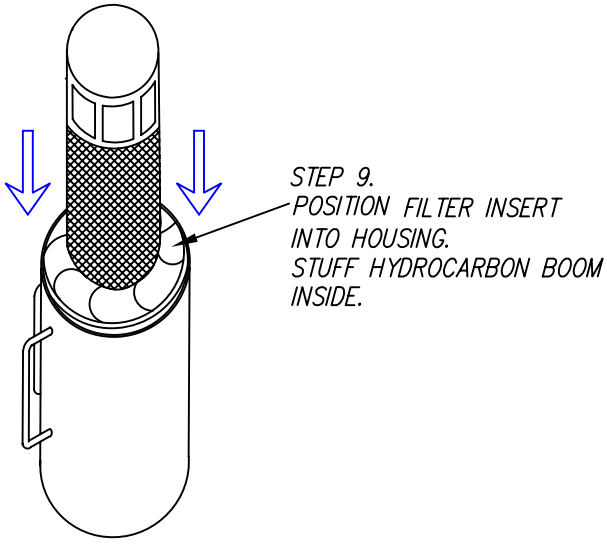

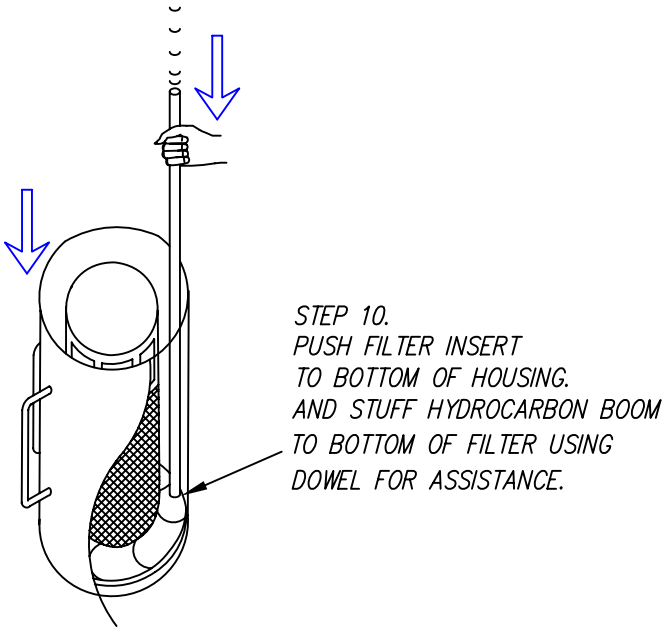

REPLACING FILTER

Bio Clean
A Forterra Company

P.O. BOX 869, Oceanside, Ca. 92049
(760) 433-7640 Fax (760) 433-3176
www.biocleanenvironmental.net

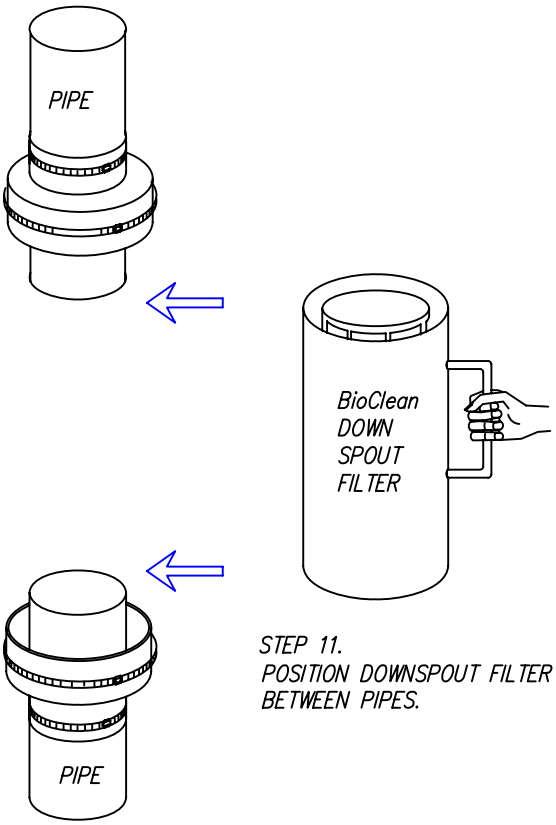

STEP 11.
POSITION DOWNSPOUT FILTER
BETWEEN PIPES.

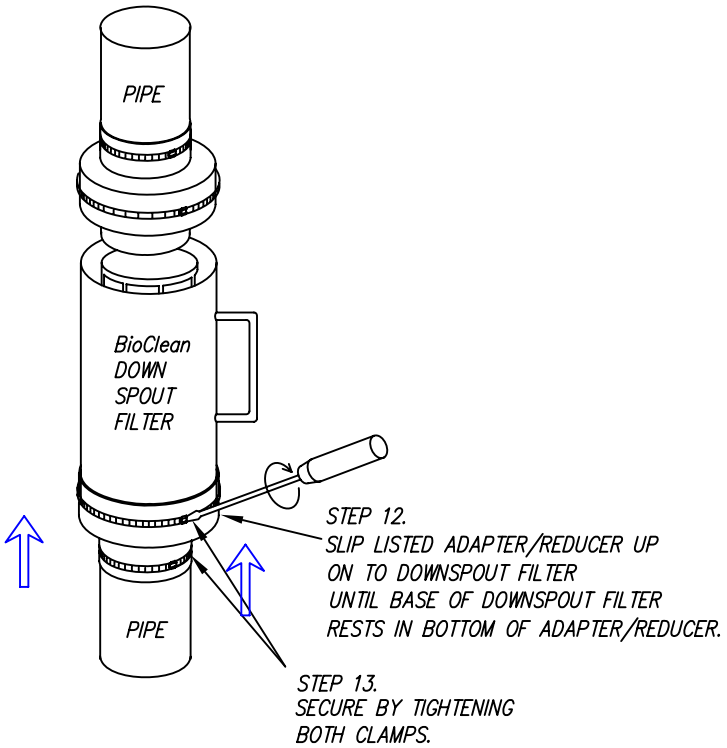

STEP 12.
SLIP LISTED ADAPTER/REDUCER UP
ON TO DOWNSPOUT FILTER
UNTIL BASE OF DOWNSPOUT FILTER
RESTS IN BOTTOM OF ADAPTER/REDUCER.

STEP 13.
SECURE BY TIGHTENING
BOTH CLAMPS.

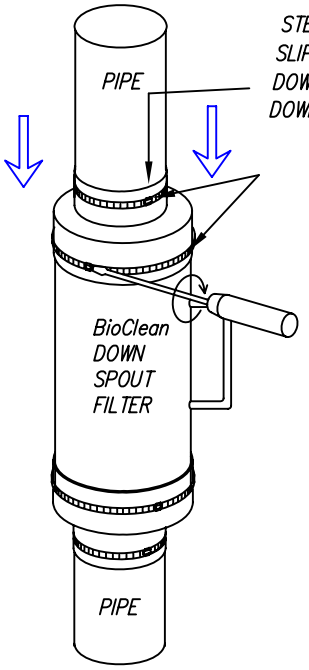

STEP 14.
SLIP LISTED ADAPTER/REDUCER
DOWNWARD ON TO
DOWNSPOUT FILTER.

STEP 15.
SECURE BY TIGHTENING
BOTH CLAMPS
WITH SCREWDRIVER.

ENSURE CLAMPS
ARE PROPERLY TIGHTENED.
SERVICE COMLPLETE.

APPROPRIATE INSTALLATION

FILTER CENTERED BETWEEN PIPES WITH EVEN GAPS ON TOP AND BOTTOM

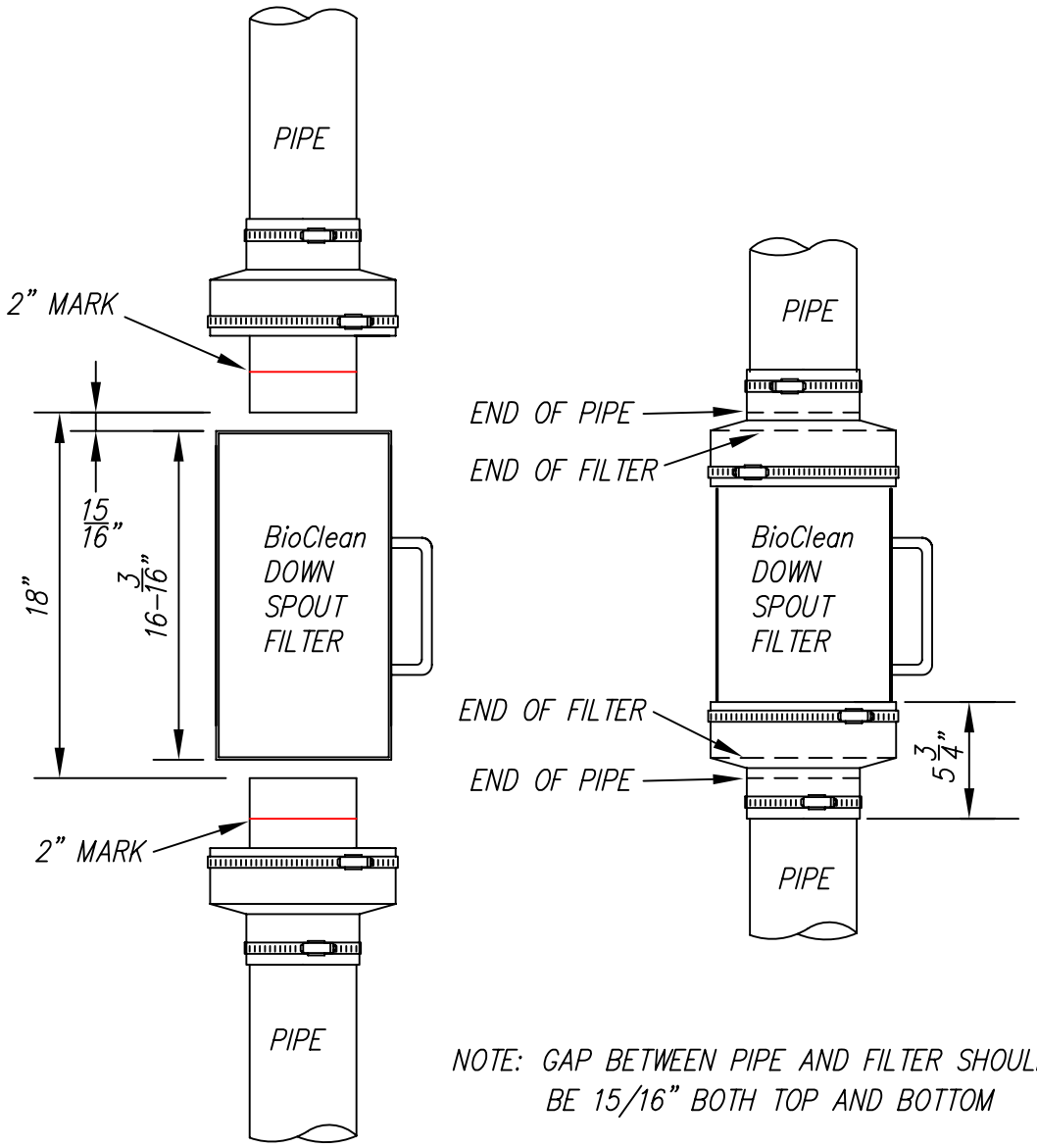

Bio Clean
A Forterra Company

P.O. BOX 869, Oceanside, Ca. 92049
(760) 433-7640 Fax (760) 433-3176
www.biocleanenvironmental.net

CATCH BASIN BASKET CONSTRUCTION MAINTENANCE SHEET

INSPECTION REQUIREMENTS		
ACTION TAKEN	**FREQUENCY**	**MAINTENANCE REQUIREMENTS**
-Check for damage to basket -Remove sediment from basket	Within 24 hours of rainfall, Daily during extended rainfall	*-Repair basket as necessary to prevent particles from reaching drainage system, or to prevent flooding.* *-Empty basket after every storm, or if clogged.*

MAINTENANCE LOG	
PROJECT NAME	
INSPECTOR NAME	**INSPECTOR CONTACT INFO**
DATE OF INSPECTION	**REASON FOR INSPECTION** ☐LARGE STORM EVENT ☐PERIODIC CHECK-IN
IS CORRECTIVE ACTION NEEDED? ☐YES ☐NO	**DESCRIBE ANY PROBLEMS, NEEDED MAINTENANCE**
DATE OF MAINTENANCE	**PERFORMED BY**
NOTES	

CLOSED DRAINAGE STRUCTURE LONG-TERM MAINTENANCE SHEET

INSPECTION REQUIREMENTS		
ACTION TAKEN	**FREQUENCY**	**MAINTENANCE REQUIREMENTS**
-Outlet Control Structures *-Drain Manholes* *-Catch Basins*	Every other Month	*Check for erosion or short-circuiting* *Check for sediment accumulation* *Check for floatable contaminants*
-Drainage Pipes	1 time per 2 years	*Check for sediment accumulation/clogging, or soiled runoff.* *Check for erosion at outlets.*

MAINTENANCE LOG	
PROJECT NAME	
INSPECTOR NAME	**INSPECTOR CONTACT INFO**
DATE OF INSPECTION	**REASON FOR INSPECTION** ☐LARGE STORM EVENT ☐PERIODIC CHECK-IN
IS CORRECTIVE ACTION NEEDED? ☐YES ☐NO	**DESCRIBE ANY PROBLEMS, NEEDED MAINTENANCE**
DATE OF MAINTENANCE	**PERFORMED BY**
NOTES	

STABILIZED CONSTRUCTION ENTRANCE CONSTRUCTION MAINTENANCE SHEET

INSPECTION REQUIREMENTS		
ACTION TAKEN	**FREQUENCY**	**MAINTENANCE REQUIREMENTS**
ENTRANCE SURFACE *-Check for sediment accumulation/clogging of stone* *-Check Vegetative filter strips*	After heavy rains, as necessary	*-Top dress pad with new stone.* *-Replace stone completely if completely clogged.* *-Maintain vigorous stand of vegetation.*
WASHING FACILITIES (if applicable) *-Monitor Sediment Accumulation*	As often as necessary	*-Remove Sediments from traps.*

MAINTENANCE LOG	
PROJECT NAME	
INSPECTOR NAME	**INSPECTOR CONTACT INFO**
DATE OF INSPECTION	**REASON FOR INSPECTION** ☐LARGE STORM EVENT ☐PERIODIC CHECK-IN
IS CORRECTIVE ACTION NEEDED? ☐YES ☐NO	**DESCRIBE ANY PROBLEMS, NEEDED MAINTENANCE**
DATE OF MAINTENANCE	**PERFORMED BY**
NOTES	

Methods for Disposing Non-Native Invasive Plants

Prepared by the Invasives Species Outreach Group, volunteers interested in helping people control invasive plants. Assistance provided by the Piscataquog Land Conservancy and the NH Invasives Species Committee. Edited by Karen Bennett, Extension Forestry Professor and Specialist.

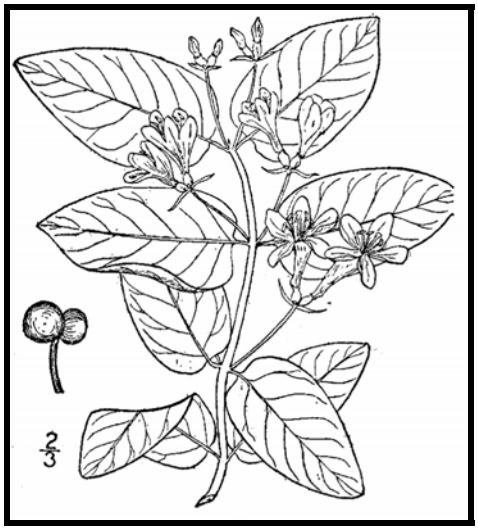

Tatarian honeysuckle
Lonicera tatarica
USDA-NRCS PLANTS Database / Britton, N.L., and A. Brown. 1913. *An illustrated flora of the northern United States, Canada and the British Possessions*. Vol. 3: 282.

Non-native invasive plants crowd out natives in natural and managed landscapes. They cost taxpayers billions of dollars each year from lost agricultural and forest crops, decreased biodiversity, impacts to natural resources and the environment, and the cost to control and eradicate them.

Invasive plants grow well even in less than desirable conditions such as sandy soils along roadsides, shaded wooded areas, and in wetlands. In ideal conditions, they grow and spread even faster. There are many ways to remove these non-native invasives, but once removed, care is needed to dispose the removed plant material so the plants don't grow where disposed.

Knowing how a particular plant reproduces indicates its method of spread and helps determine the appropriate disposal method. Most are spread by seed and are dispersed by wind, water, animals, or people. Some reproduce by vegetative means from pieces of stems or roots forming new plants. Others spread through both seed and vegetative means.

Because movement and disposal of viable plant parts is restricted (see NH Regulations), viable invasive parts can't be brought to most transfer stations in the state. Check with your transfer station to see if there is an approved, designated area for invasives disposal. This fact sheet gives recommendations for rendering plant parts non-viable.

Control of invasives is beyond the scope of this fact sheet. For information about control visit www.nhinvasives.org or contact your UNH Cooperative Extension office.

New Hampshire Regulations

Prohibited invasive species shall only be disposed of in a manner that renders them nonliving and nonviable. (Agr. 3802.04)

No person shall collect, transport, import, export, move, buy, sell, distribute, propagate or transplant any living and viable portion of any plant species, which includes all of their cultivars and varieties, listed in Table 3800.1 of the New Hampshire prohibited invasive species list. (Agr 3802.01)

How and When to Dispose of Invasives?

To prevent seed from spreading remove invasive plants before seeds are set (produced). Some plants continue to grow, flower and set seed even after pulling or cutting. Seeds can remain viable in the ground for many years. If the plant has flowers or seeds, place the flowers and seeds in a heavy plastic bag "head first" at the weeding site and transport to the disposal site. The following are general descriptions of disposal methods. See the chart for recommendations by species.

Burning: Large woody branches and trunks can be used as firewood or burned in piles. For outside burning, a written fire permit from the local forest fire warden is required unless the ground is covered in snow. Brush larger than 5 inches in diameter can't be burned. Invasive plants with easily airborne seeds like black swallow-wort with mature seed pods (indicated by their brown color) shouldn't be burned as the seeds may disperse by the hot air created by the fire.

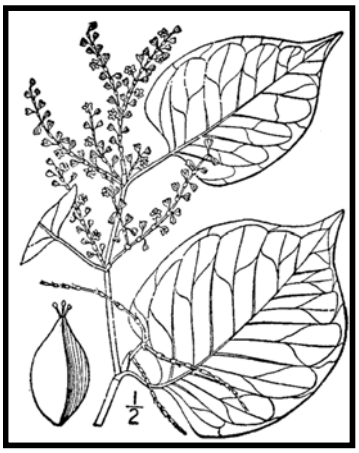

Japanese knotweed
Polygonum cuspidatum
USDA-NRCS PLANTS Database / Britton, N.L., and A. Brown. 1913. *An illustrated flora of the northern United States, Canada and the British Possessions*. Vol. 1: 676.

Bagging (solarization): Use this technique with softer-tissue plants. Use heavy black or clear plastic bags (contractor grade), making sure that no parts of the plants poke through. Allow the bags to sit in the sun for several weeks and on dark pavement for the best effect.

Tarping and Drying: Pile material on a sheet of plastic and cover with a tarp, fastening the tarp to the ground and monitoring it for escapes. Let the material dry for several weeks, or until it is clearly nonviable.

Chipping: Use this method for woody plants that don't reproduce vegetatively.

Burying: This is risky, but can be done with watchful diligence. Lay thick plastic in a deep pit before placing the cut up plant material in the hole. Place the material away from the edge of the plastic before covering it with more heavy plastic. Eliminate as much air as possible and toss in soil to weight down the material in the pit. Note that the top of the buried material should be at least three feet underground. Japanese knotweed should be at least 5 feet underground!

Drowning: Fill a large barrel with water and place soft-tissue plants in the water. Check after a few weeks and look for rotted plant material (roots, stems, leaves, flowers). Well-rotted plant material may be composted. A word of caution- seeds may still be viable after using this method. Do this before seeds are set. This method isn't used often. Be prepared for an awful stink!

Composting: Invasive plants can take root in compost. Don't compost any invasives unless you know there is no viable (living) plant material left. Use one of the above techniques (bagging, tarping, drying, chipping, or drowning) to render the plants nonviable before composting. Closely examine the plant before composting and avoid composting seeds.

Be diligent looking for seedlings for *years* in areas where removal and disposal took place.

Suggested Disposal Methods for Non-Native Invasive Plants

This table provides information concerning the disposal of removed invasive plant material. If the infestation is treated with herbicide and left in place, these guidelines don't apply. Don't bring invasives to a local transfer station, unless there is a designated area for their disposal, or they have been rendered non-viable. This listing includes wetland and upland plants from the New Hampshire Prohibited Invasive Species List. The disposal of aquatic plants isn't addressed.

Woody Plants	Method of Reproducing	Methods of Disposal
Norway maple *(Acer platanoides)* European barberry *(Berberis vulgaris)* Japanese barberry *(Berberis thunbergii)* autumn olive *(Elaeagnus umbellata)* burning bush *(Euonymus alatus)* Morrow's honeysuckle *(Lonicera morrowii)* Tatarian honeysuckle *(Lonicera tatarica)* showy bush honeysuckle *(Lonicera x bella)* common buckthorn *(Rhamnus cathartica)* glossy buckthorn *(Frangula alnus)*	**Fruit and Seeds**	**Prior to fruit/seed ripening** Seedlings and small plants ▪ Pull or cut and leave on site with roots exposed. No special care needed. Larger plants ▪ Use as firewood. ▪ Make a brush pile. ▪ Chip. ▪ Burn.
		After fruit/seed is ripe Don't remove from site. ▪ Burn. ▪ Make a covered brush pile. ▪ Chip once all fruit has dropped from branches. ▪ Leave resulting chips on site and monitor.
oriental bittersweet *(Celastrus orbiculatus)* multiflora rose *(Rosa multiflora)*	**Fruits, Seeds, Plant Fragments**	**Prior to fruit/seed ripening** Seedlings and small plants ▪ Pull or cut and leave on site with roots exposed. No special care needed. Larger plants ▪ Make a brush pile. ▪ Burn.
		After fruit/seed is ripe Don't remove from site. ▪ Burn. ▪ Make a covered brush pile. ▪ Chip – only after material has fully dried (1 year) and all fruit has dropped from branches. Leave resulting chips on site and monitor.

Non-Woody Plants	Method of Reproducing	Methods of Disposal
garlic mustard *(Alliaria petiolata)* spotted knapweed *(Centaurea maculosa)* ▪ Sap of related knapweed can cause skin irritation and tumors. Wear gloves when handling. black swallow-wort *(Cynanchum nigrum)* ▪ May cause skin rash. Wear gloves and long sleeves when handling. pale swallow-wort *(Cynanchum rossicum)* giant hogweed *(Heracleum mantegazzianum)* ▪ Can cause major skin rash. Wear gloves and long sleeves when handling. dame's rocket *(Hesperis matronalis)* perennial pepperweed *(Lepidium latifolium)* purple loosestrife *(Lythrum salicaria)* Japanese stilt grass *(Microstegium vimineum)* mile-a-minute weed *(Polygonum perfoliatum)*	**Fruits and Seeds**	**Prior to flowering** Depends on scale of infestation Small infestation ▪ Pull or cut plant and leave on site with roots exposed. Large infestation ▪ Pull or cut plant and pile. (You can pile onto or cover with plastic sheeting). ▪ Monitor. Remove any re-sprouting material.
		During and following flowering Do nothing until the following year or remove flowering heads and bag and let rot. Small infestation ▪ Pull or cut plant and leave on site with roots exposed. Large infestation ▪ Pull or cut plant and pile remaining material. (You can pile onto plastic or cover with plastic sheeting). ▪ Monitor. Remove any re-sprouting material.
common reed (*Phragmites australis*) Japanese knotweed *(Polygonum cuspidatum)* Bohemian knotweed *(Polygonum x bohemicum)*	**Fruits, Seeds, Plant Fragments** Primary means of spread in these species is by plant parts. Although all care should be given to preventing the dispersal of seed during control activities, the presence of seed doesn't materially influence disposal activities.	**Small infestation** ▪ Bag all plant material and let rot. ▪ Never pile and use resulting material as compost. ▪ Burn. **Large infestation** ▪ Remove material to unsuitable habitat (dry, hot and sunny or dry and shaded location) and scatter or pile. ▪ Monitor and remove any sprouting material. ▪ Pile, let dry, and burn.

January 2010

UNH Cooperative Extension programs and policies are consistent with pertinent Federal and State laws and regulations, and prohibits discrimination in its programs, activities and employment on the basis of race, color, national origin, gender, religion, age, disability, political beliefs, sex, sexual orientation, or veteran's, marital or family status. College of Life Sciences and Agriculture, County Governments, NH Dept. of Resources and Economic Development, Division of Forests and Lands, NH Fish and Game ,and U.S. Dept. of Agriculture cooperating.

SPOT GRADES	
	33.09
	32.14
	31.58
	31.82
	31.20
	30.54
	29.94
	29.33
	28.74
	28.14
	27.54
	27.02
	26.64
	26.63
	26.70
	26.77
	26.84
	27.13
	26.96
	27.06
	27.18
	27.33
	27.31
	27.24
	27.32
	27.42
	27.53
	27.73
	27.75
	27.71
	27.65
	27.59
	27.56
TOTAL	933.13

933.13/33 =28.3
EXISTING AVERAGE GRADE = 28.3

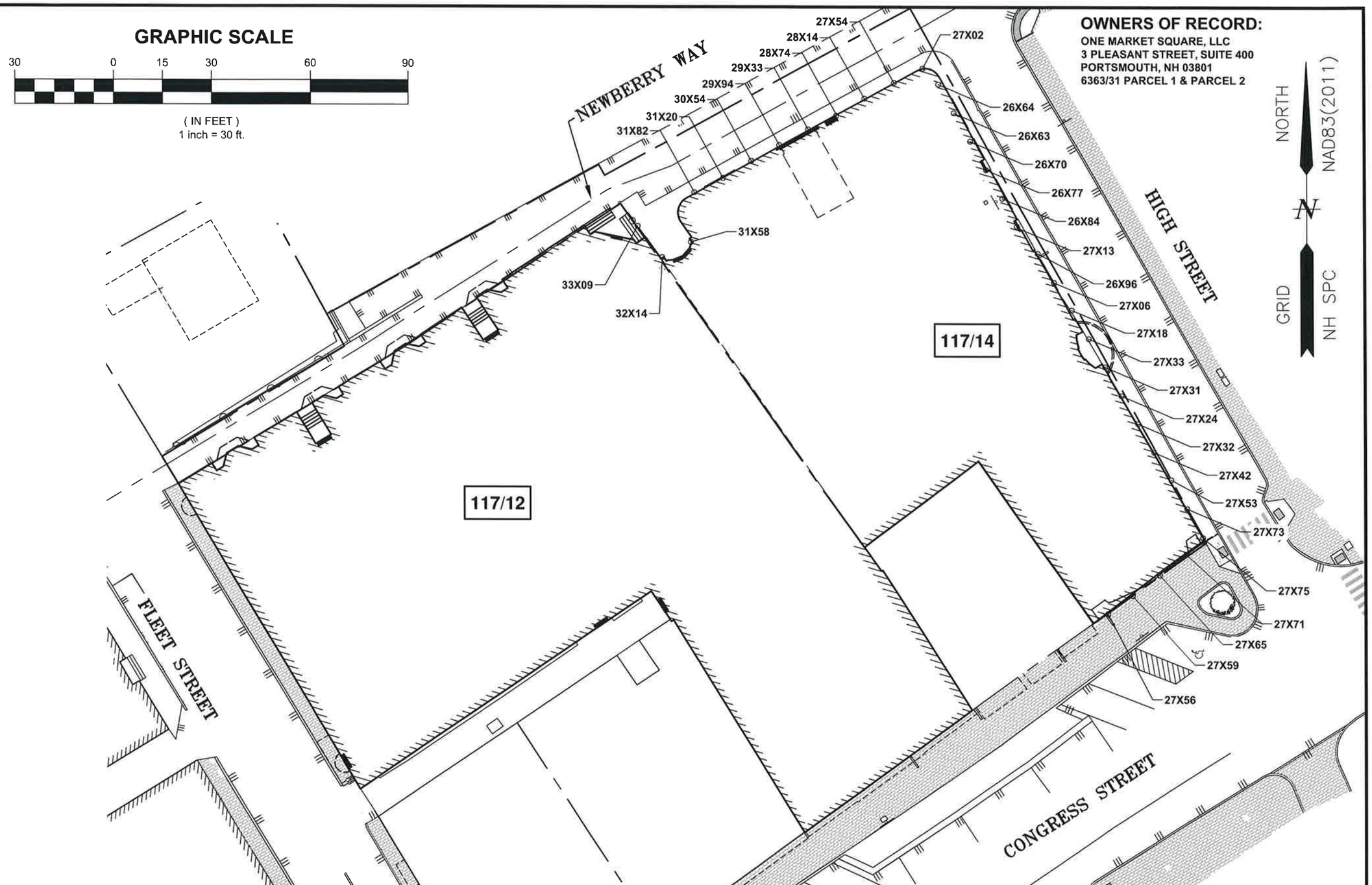

PROJECT **MIXED USE DEVELOPMENT** 1-15 CONGRESS STREET PORTSMOUTH, NH	DWG No. **AGP-1**	BY SJR DATE 11/13/24	DRAWING STATUS **PERMIT PLANS**	HALEY WARD ENGINEERING I ENVIRONMENTAL I SURVEYING
TITLE **EXISTING AVERAGE GRADE PLANE- 1 CONGRESS**	JN 5010156.3406 SCALE N.T.S.	REV. REV. DATE		

P:\NH\5010156 McNabb, Properties\3406 Congress St., Portsmouth JRC\2025 Site Plan\05-Deliverables_Archive\Portsmouth Drawings\5010156.3406 Average Grade Plane-Existing.dwg, 11/13/2024 11:59:54 AM

SPOT GRADES	
	27.16
	26.81
	26.45
	26.12
	25.78
	25.36
	25.02
	25.32
	25.37
	25.29
	25.09
	24.90
	24.64
	24.37
	24.07
	23.69
	23.21
	22.92
	22.36
	22.04
	21.95
	21.60
	21.25
	20.89
	20.47
	20.02
	19.73
	19.37
	19.05
	18.74
	20.21
	21.77
	23.40
	25.05
	26.64
	28.19
	29.76
	31.33
	32.49
	33.65
	33.96
	33.79
	33.63
	33.48
	33.09
TOTAL	1139.48

1139.48/45 = 25.3
EXISTING AVERAGE GRADE = 25.3

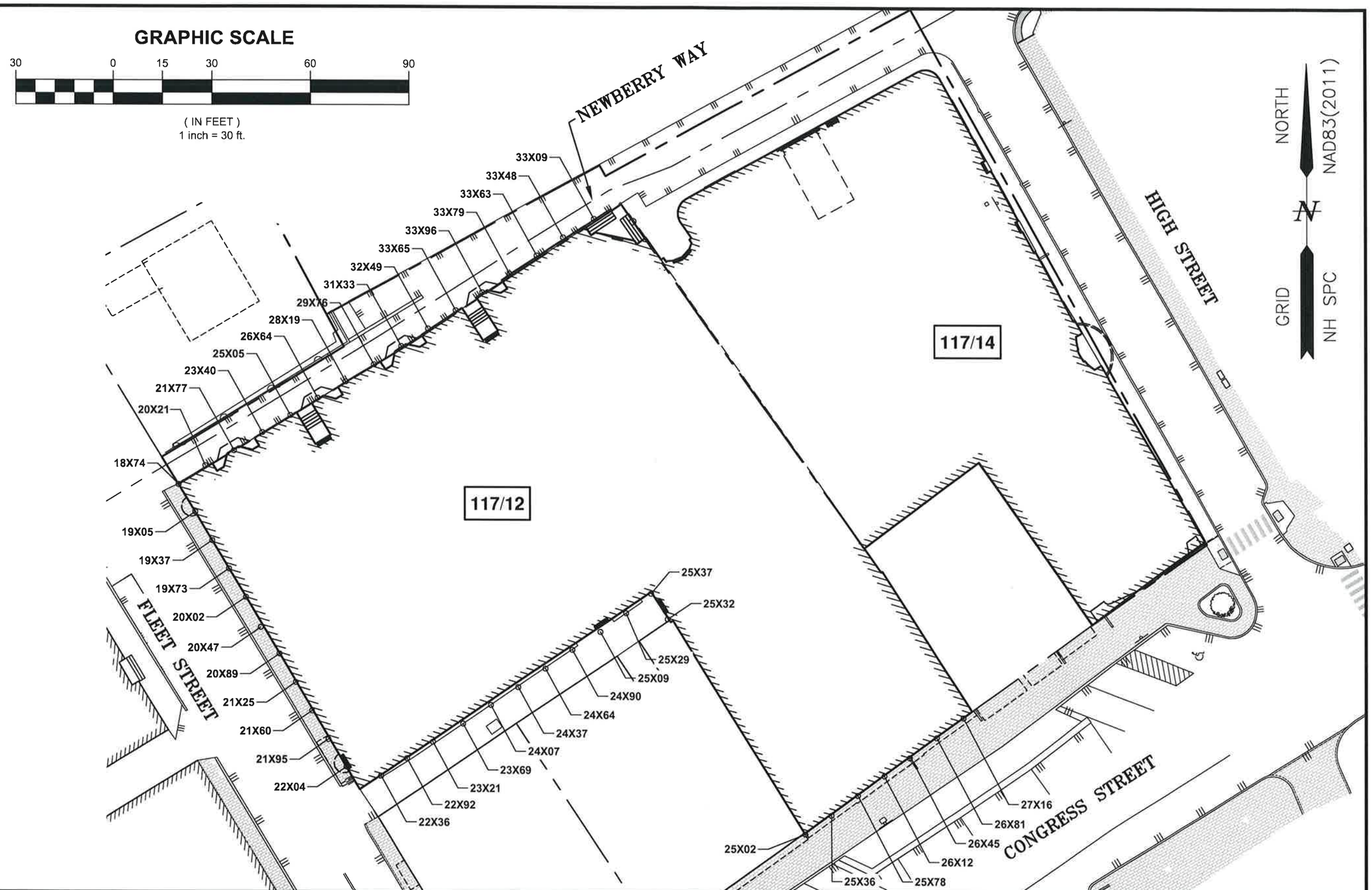

PROJECT	DWG No.	BY	DRAWING STATUS
MIXED USE DEVELOPMENT **1-15 CONGRESS STREET PORTSMOUTH, NH**	**AGP-2**	SJR	**PERMIT PLANS**
		DATE 11/13/24	
TITLE	JN 5010156.3406	REV.	
EXISTING AVERAGE GRADE PLANE- 15 CONGRESS	SCALE N.T.S.	REV. DATE	

HALEY WARD
ENGINEERING | ENVIRONMENTAL | SURVEYING

P:\NH\5010156 McNabb_Properties\3406 Congress St., Portsmouth - JRC\2025 Site Plan\05-Deliverables_Archive\Portsmouth Drawings\5010156.3406-Average Grade Plane-Existing.dwg, 11/13/2024 12:02:51 PM

SPOT GRADES	
	23.77
	23.88
	24.00
	24.39
	24.67
	24.87
	24.97
	25.02
	25.07
	25.19
	25.32
	25.44
	26.64
	26.71
	26.79
	26.87
	26.95
	27.03
	27.11
	27.19
	27.26
	27.33
	27.39
	27.45
	27.51
	27.57
	27.63
	27.69
	27.75
	27.71
	27.65
	27.59
	27.56
TOTAL	869.97

869.97/33 = 26.4
PROPOSED AVERAGE GRADE = 26.4

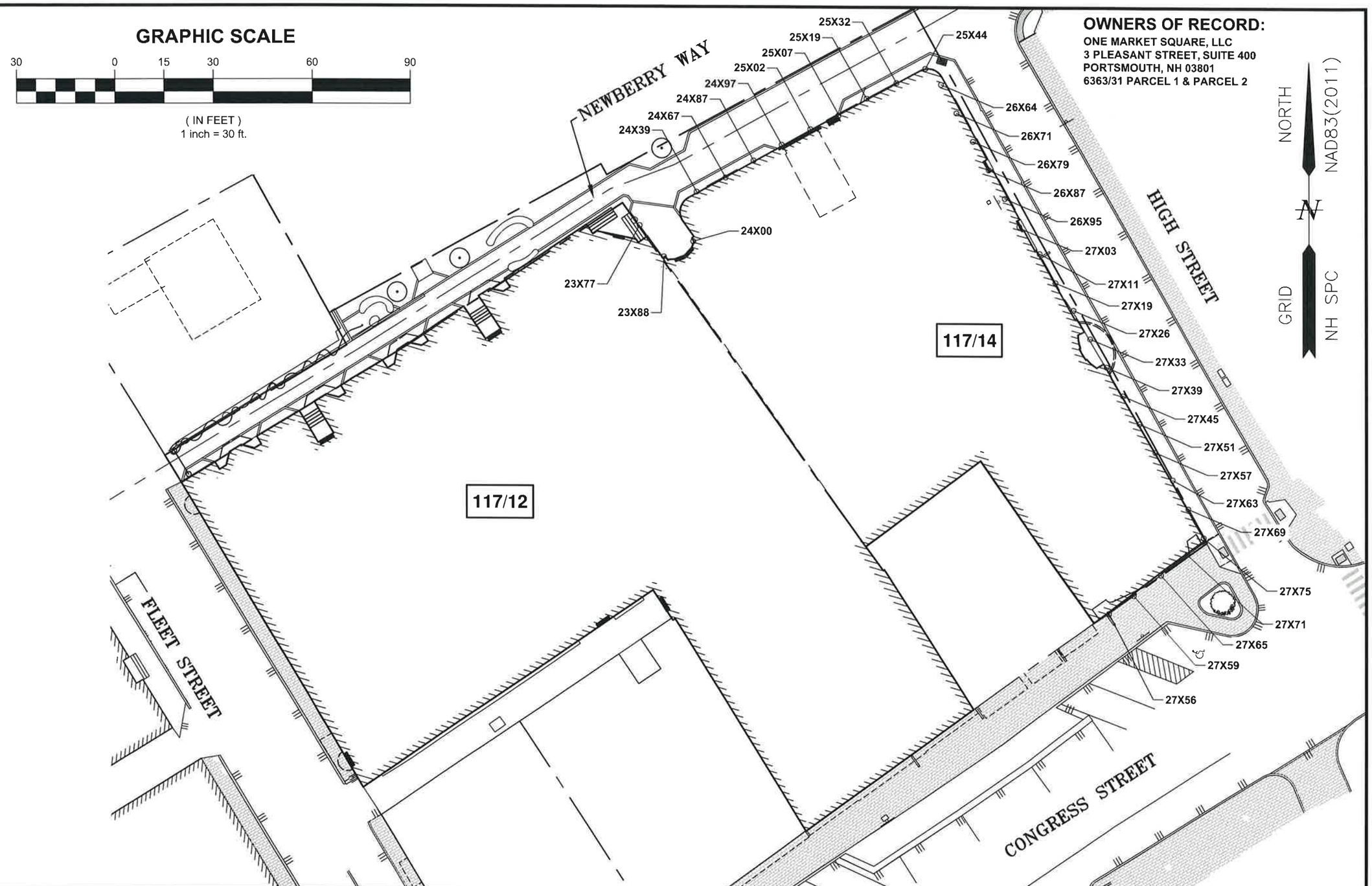

PROJECT	DWG No.	BY	DRAWING STATUS
MIXED USE DEVELOPMENT 1-15 CONGRESS STREET PORTSMOUTH, NH	**AGP-3**	SJR	**PERMIT PLANS**
		DATE 11/13/24	
TITLE	JN 5010156.3406	REV.	
PROPOSED AVERAGE GRADE PLANE- 1 CONGRESS	SCALE N.T.S.	REV. DATE	

HALEY WARD
ENGINEERING | ENVIRONMENTAL | SURVEYING

P:\NH\5010156 McNabb Properties\3406-Congress St. Portsmouth-JRC\2025 Site Plan\05 Deliverables Archive\Portsmouth Drawings\5010156.3406 Average Grade Plane Proposed.dwg, 11/14/2024 11:23:14 AM

SPOT GRADES	
	27.16
	26.81
	26.45
	26.12
	25.78
	25.36
	25.02
	25.32
	25.37
	25.29
	25.09
	24.90
	24.64
	24.37
	24.07
	23.69
	23.21
	22.92
	22.36
	22.04
	21.95
	21.60
	21.25
	20.89
	20.47
	20.02
	19.73
	19.37
	19.05
	18.74
	18.88
	19.20
	19.52
	19.84
	20.15
	20.47
	20.79
	21.10
	21.42
	21.74
	22.06
	22.38
	22.70
	23.01
	22.36
TOTAL	1014.66

1014.66/45 = 22.5
PROPOSED AVERAGE GRADE = 22.5

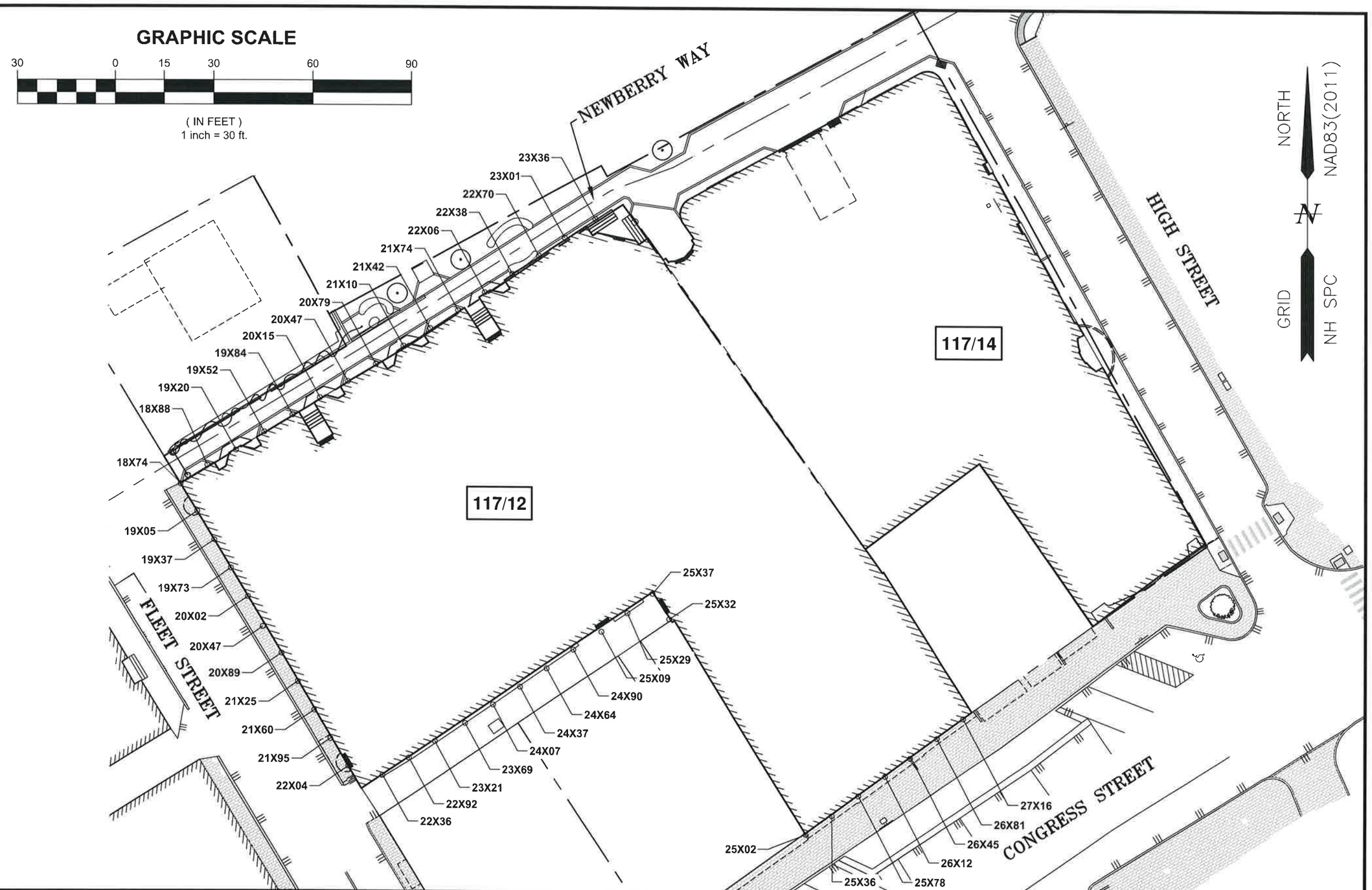

PROJECT	DWG No.	BY	DRAWING STATUS
MIXED USE DEVELOPMENT 1-15 CONGRESS STREET PORTSMOUTH, NH	**AGP-4**	SJR	**PERMIT PLANS**
		DATE 11/13/24	
TITLE	JN 5010156.3406	REV.	
PROPOSED AVERAGE GRADE PLANE- 15 CONGRESS	SCALE N.T.S.	REV. DATE	

HALEY WARD
ENGINEERING | ENVIRONMENTAL | SURVEYING

P:\NH\5010156-McKabb_Properties\3406-Congress St, Portsmouth-JRC\2025 Site Plan\05-Deliverables_Archive\Portsmouth Drawings\5010156.3406-Average Grade Plane Proposed.dwg, 11/14/2024 9:16:25 AM

structura

CATENARY DESIGN GUIDE

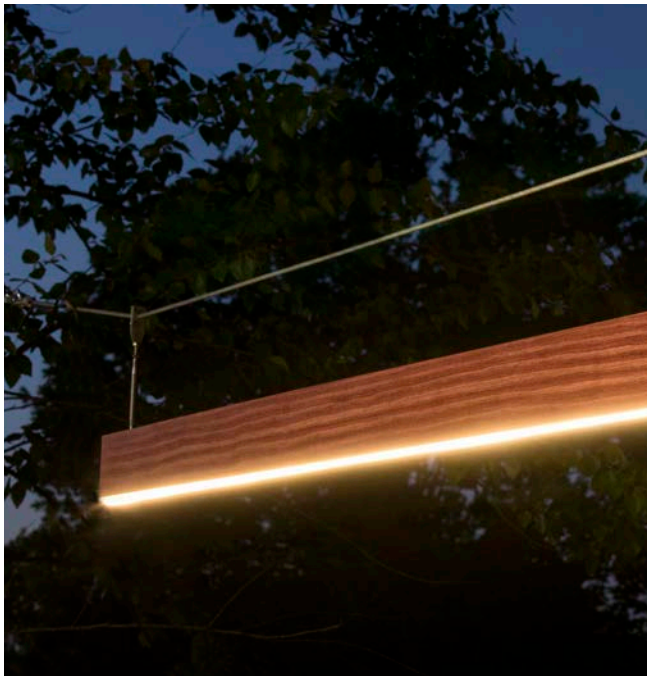

WHAT WE PROVIDE

Luminaires with Cable Mounting, Adjustment and Power Supplies

Dimmable IP67 power supply and a standard 40’ lead wire provided with the Structura fixture. Stainless steel clamp, rod and turnbuckles with ±1.5” adjustability provided for fixture mounting and leveling.

Poles with Cable Eyes

Pad eye for cable mounting welded to designated catenary pole. Poles must be oriented so that pad eye is in line with the cable.

Cable Assemblies

1 x 19 stainless steel cable with turnbuckles on each end. Cable size determined from layout design. Cables provide ±5” of adjustability. Lengths must be verified prior to final engineering/release.

Stamped Drawings

Stamped drawings will extend lead time, have additional costs, and may not have licensing in all states. Base and cable reaction forces will be provided with stamped drawings.

What We Don’t Provide

- Structural design and engineering of building attachment or pole foundation
- Installation
- Building cable attachment detail

AURA RING

Solid wood exterior/interior round LED pendants

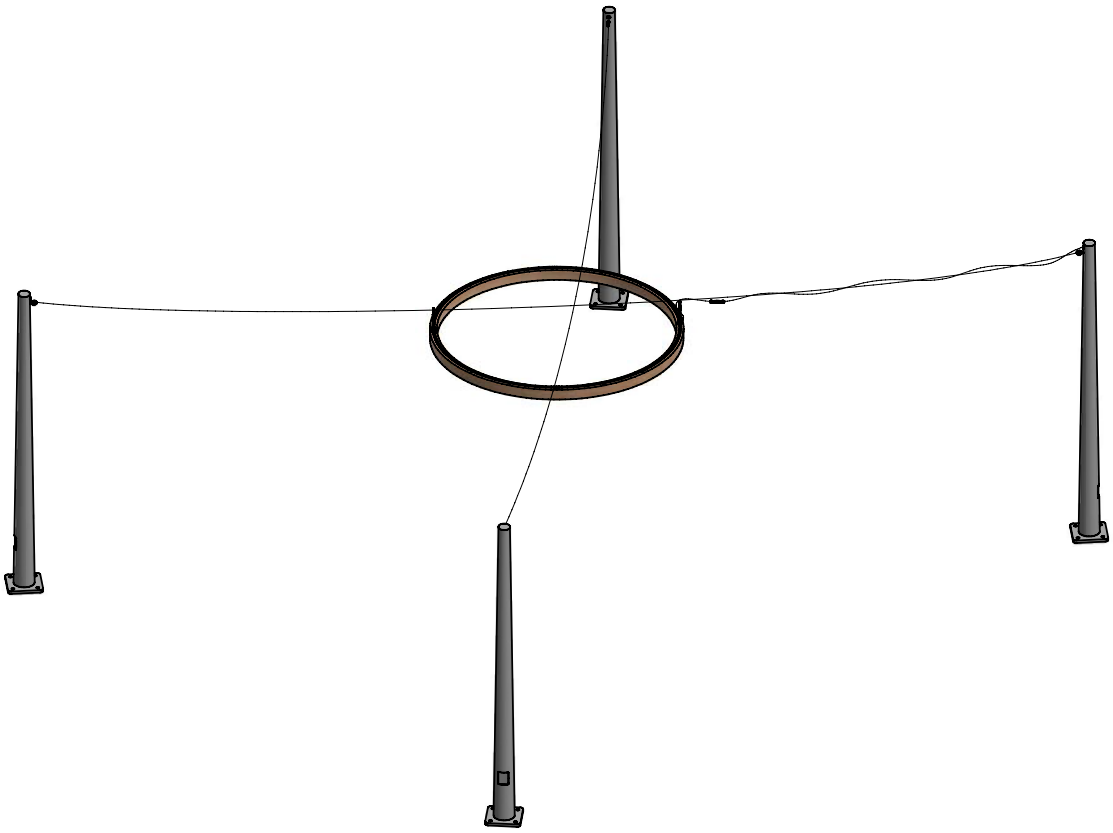

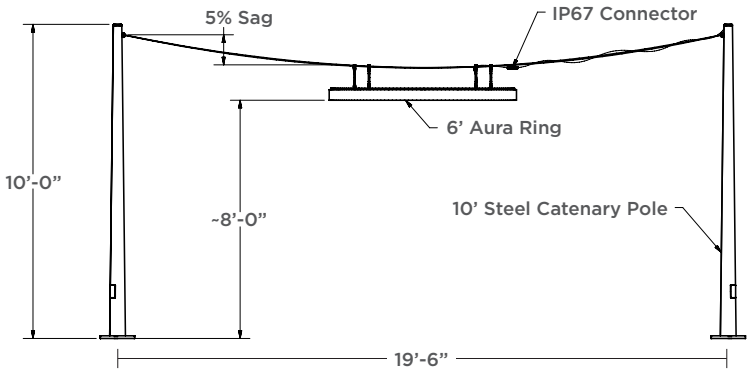

AURA LINEAR

Solid wood exterior/interior linear LED pendants

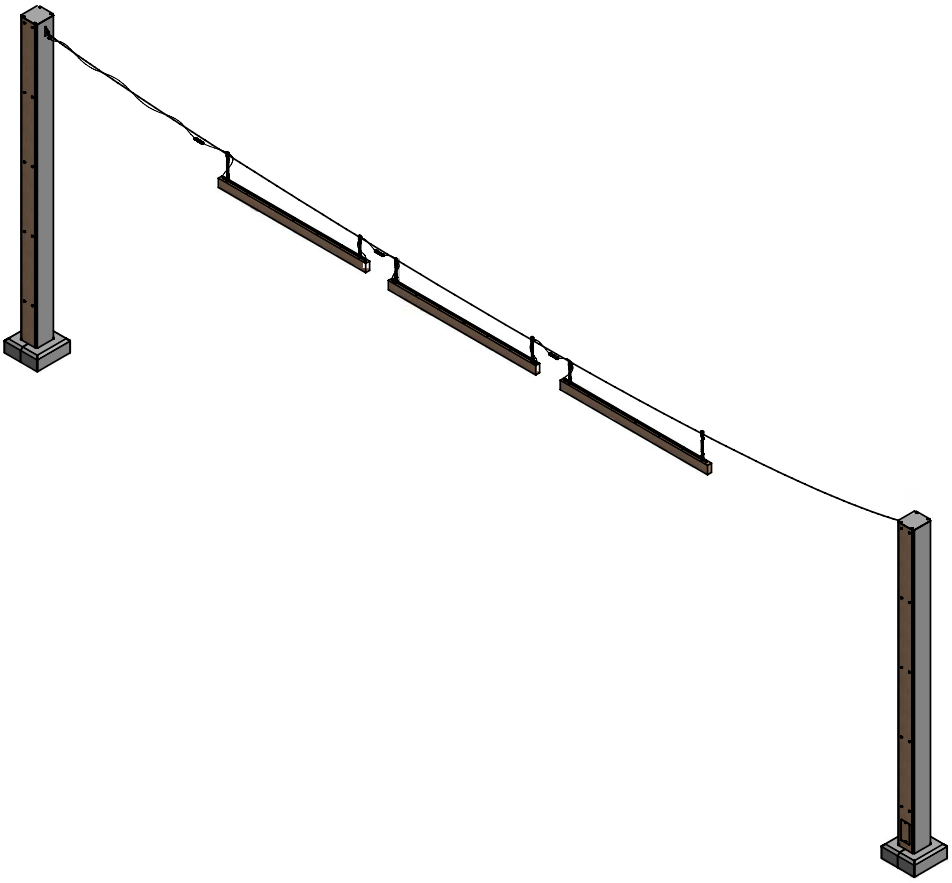

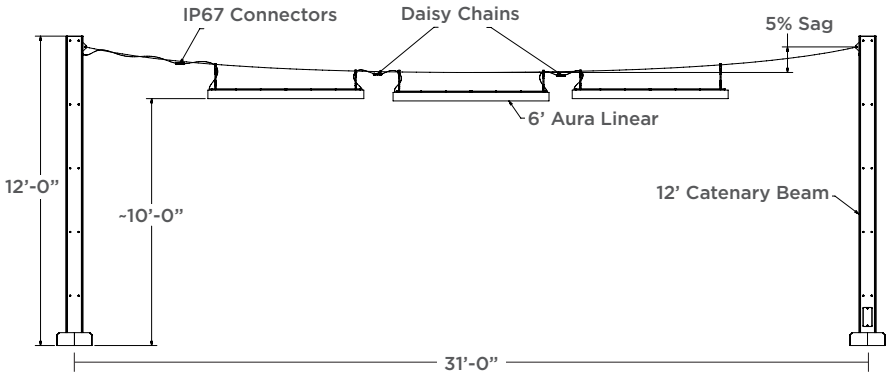

SQUARE/RECTANGLE SYSTEM

Solid wood exterior/interior square/rectangle LED pendants

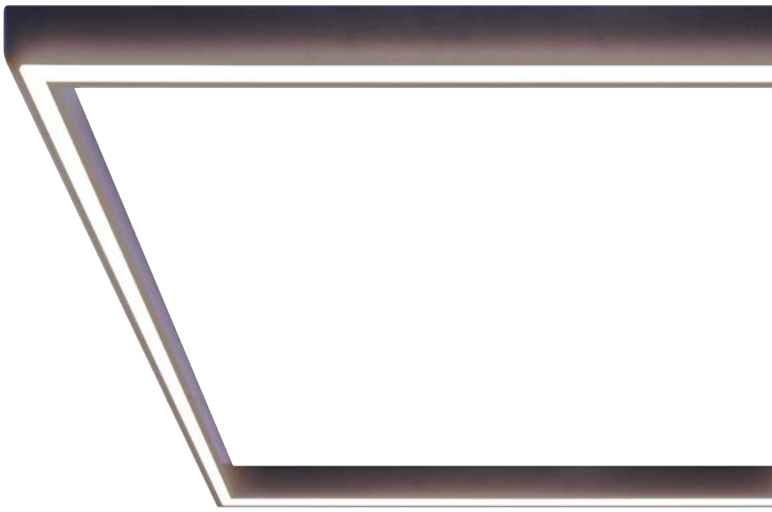

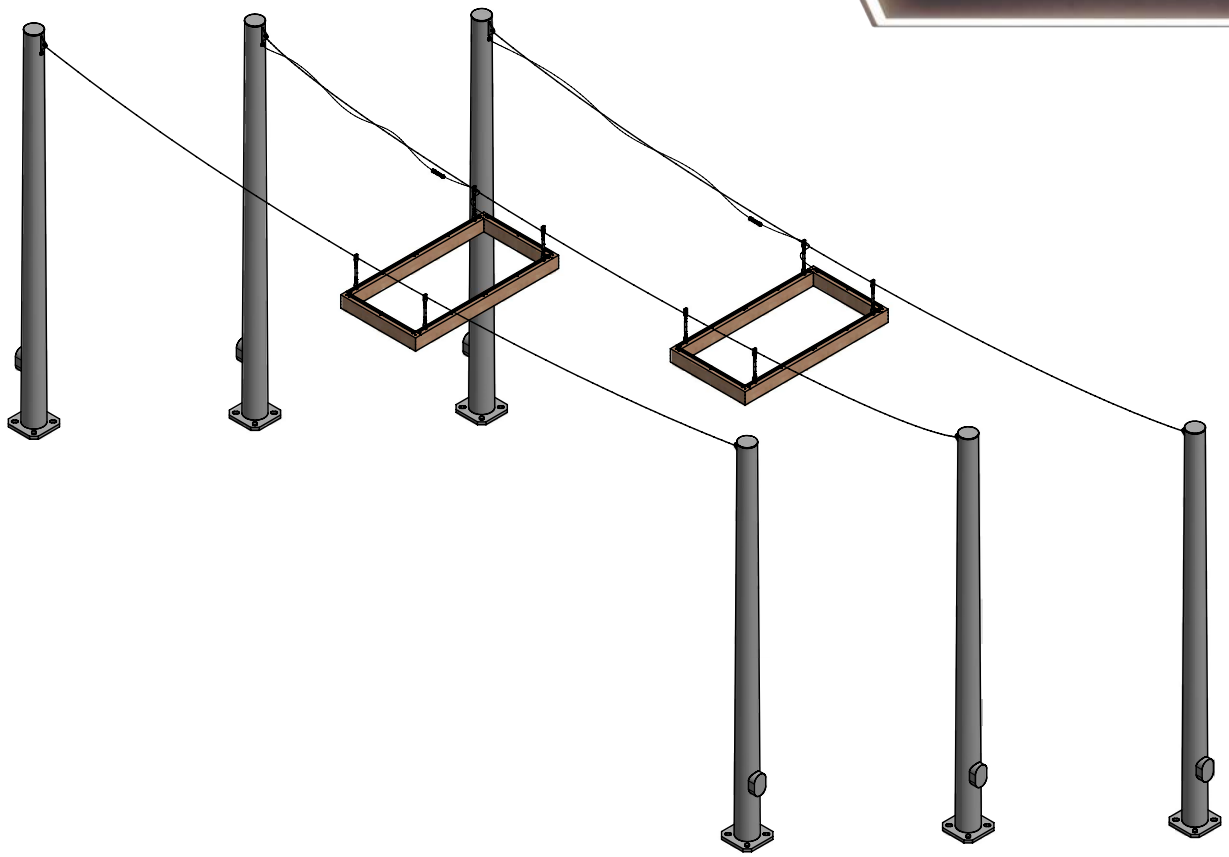

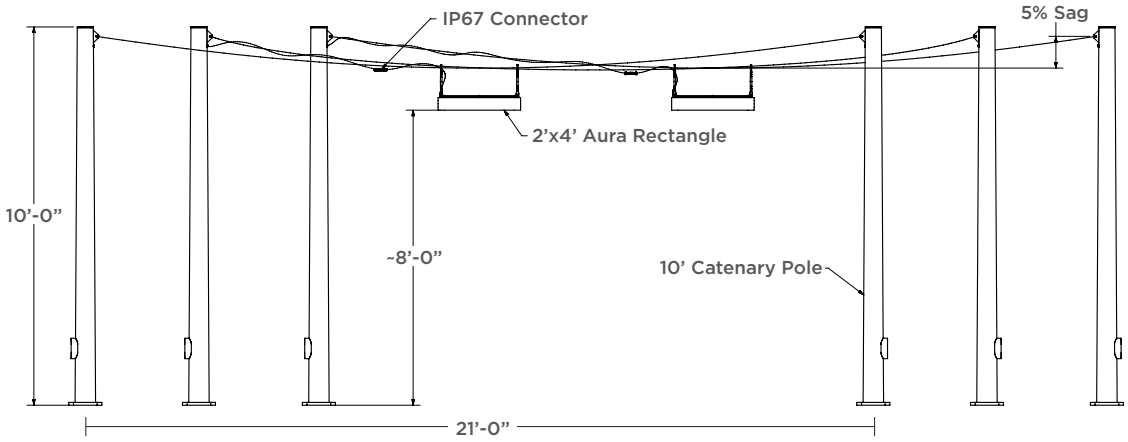

COMPLEX SYSTEM

Solid wood exterior/interior LED pendant multiples

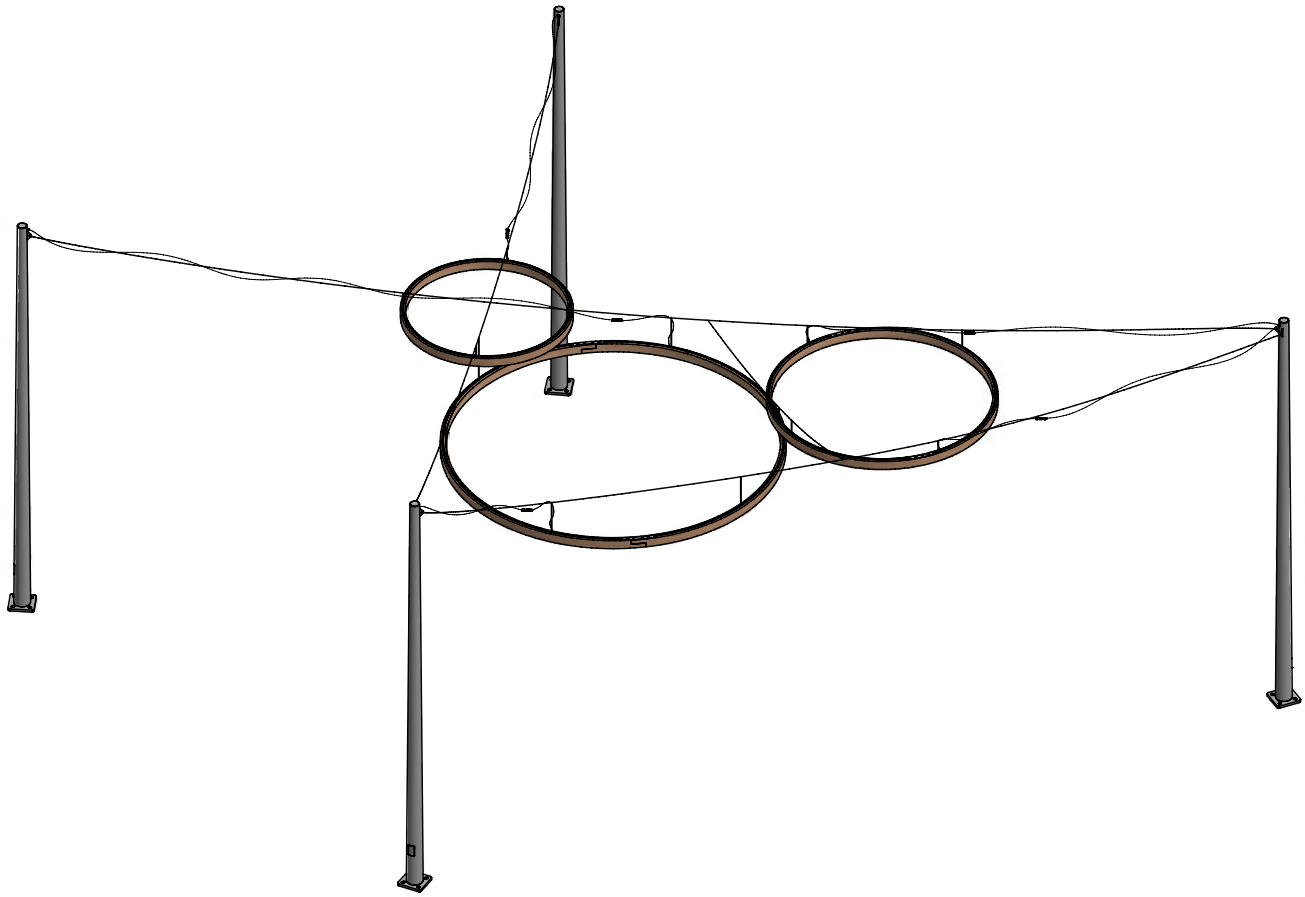

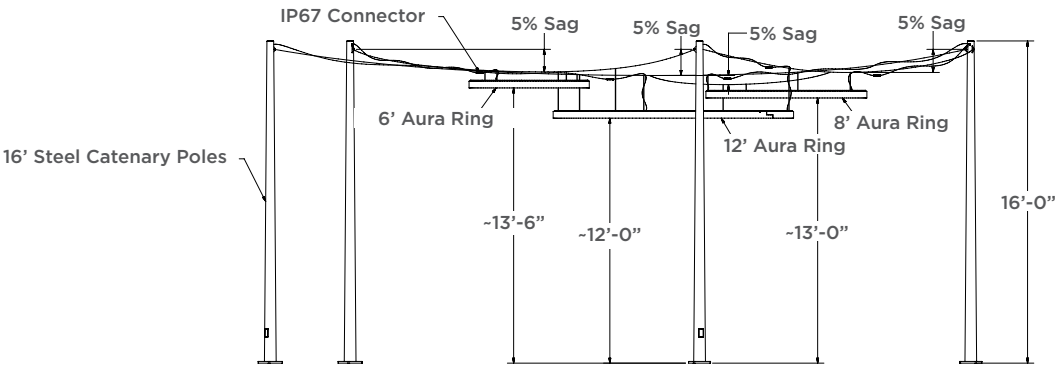

POLE SELECTION GUIDELINES

Choosing the pole to use in your design is dependent upon the tension load of the luminaire selected, length of span, and other environmental considerations. Use the chart below as a guide to help determine which pole can be used for your design.

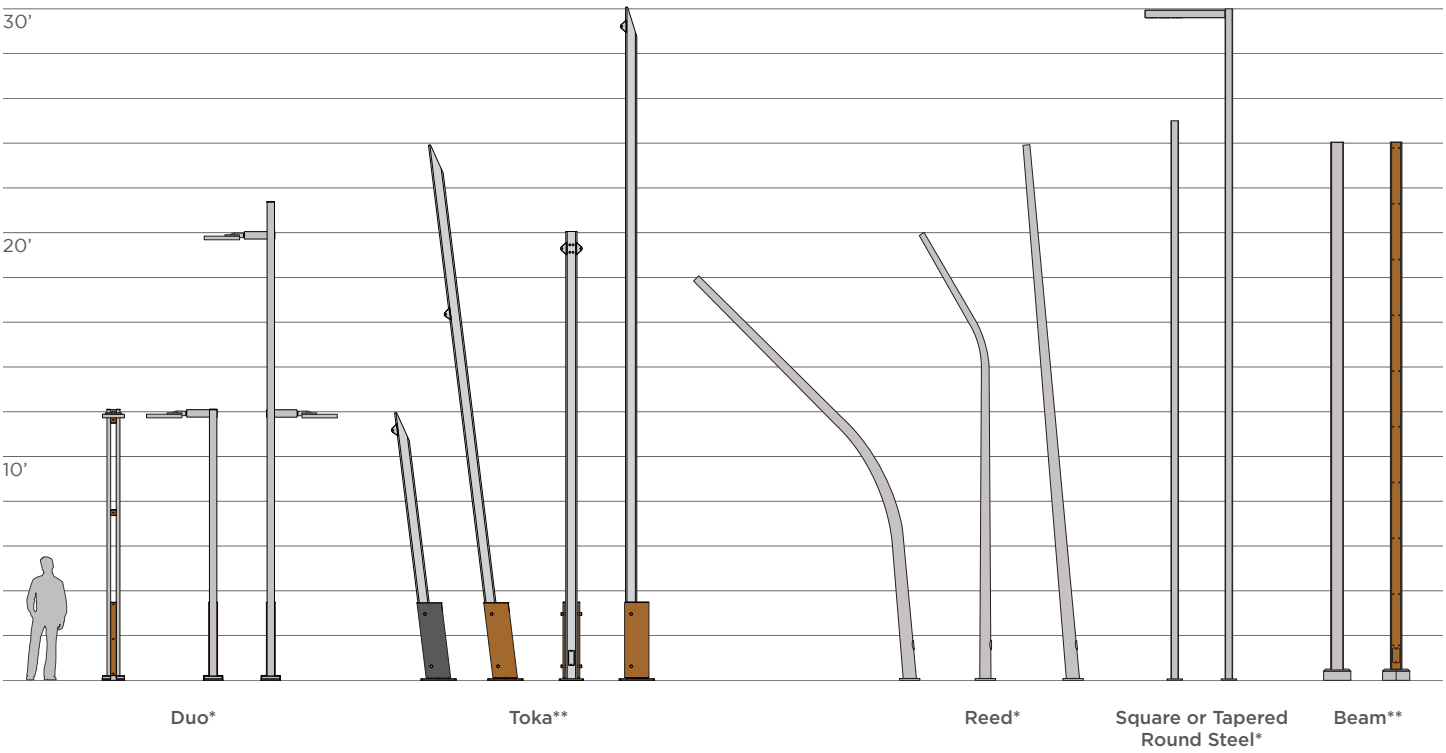

*Additional height options are available. | **Has a strong and weak orientation; additional height options are available.

	Duo	Toka	Reed	Square Steel	Tapered Round Steel	Beam
Minimal string lighting < 20’ span with min. 12” sag	✓	✓	✓	✓	✓	✓
String lighting > 20’ span with min. 12” sag		✓	✓	✓	✓	✓
Catenary Luminaires < 20’ span and < 20 lb. luminaire weight		✓	✓	✓	✓	✓
Catenary Luminaires < 40’ span and < 80 lb. luminaire weight		✓	✓		✓	✓
Catenary Luminaires > 40’ span or > 80 lb. luminaire weight					✓	

Site layout and location will play the biggest role in determining what poles will be available for each design.

CATENARY FAQS

Is geographic location important when designing a catenary system?

Geographic location is critical when designing your project. Not only wind zones, but ice loading elevation and many other factors can dramatically change the cabling and poles required.

Can wood poles be used on catenary projects?

Wood-look poles will only work with minimal string light. If a wood look is desired, Beam may be a better alternative.

How much cable sag can be expected between connections?

As a rule of thumb, plan on a sag of 5% of the cable span for each cable length as the sag in a section. For example if you had a 20' cable span the sag would be 12".

What is the typical process to get budget estimates on projects?

Once Structura has obtained the required information, it will take one to two weeks (depending on the complexity of the design) for preliminary engineering. At this time, a budget estimate, layout drawings and BOM will be provided.

Can Structura provide stamped drawings if required?

Structura can provide stamped drawings for a fee. It is important to identify this at the budget stage so the cost can be included at the beginning of the project. Stamped drawings may extend the lead time for approval drawings.

What is the difference between preliminary and final engineering?

During the quoting phase, preliminary engineering will be done to estimate the size of the poles and cables. Final engineering will begin at the time of order or after an engineering fee has been paid. Poles and cable sizing are subject to change until final engineering is completed.

What are the mounting point requirements?

Rings 6' or smaller require four mounting points and rings 8' or greater must have six mounting points. Linears up to 6' must have two mounting points and linears 8' or greater require three mounting points. If mounting points are limited, please consult with the factory.

DESIGN INFORMATION

When designing catenary systems, each site has unique information that needs to be provided to ensure the proper sizing of the system components. The below information needs to be supplied before we can begin preliminary engineering or the quoting process.

Critical Information

- All span lengths (B)
- Cable sag (if greater than 5%) (C)
- Minimum fixture height (D)
- Cable angles (E)
- Luminaire center location from the pole (Fx)
- Spec of Structura luminaires (size/shape) (G)
- Geographic location of installation for wind and ice loading
- Any additional loading (fixtures, elevation, etc).
- AutoCAD file is preferred
- Elevation (if above ground level)
- Weight/foot of string lights

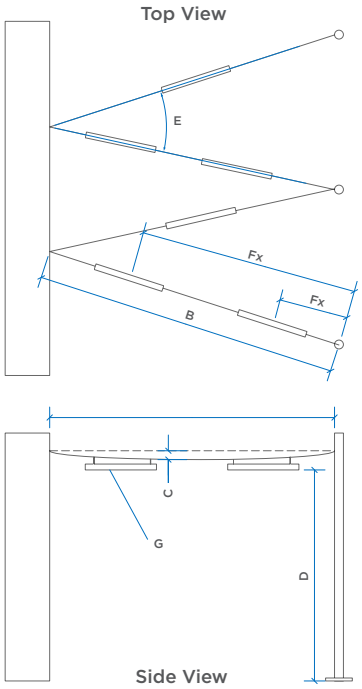

After all of the critical information is obtained by Structura:

1-2 Weeks:

- Preliminary Engineering – Approximate sizing for poles and cables without full analysis.
- Layout Drawings – Visual representation of Structura's interpretation of the critical information.
- Bill of Materials – List of what will and will not be provided by Structura.
- Budget Quote – Pricing for everything Structura will provide in the BOM as well as the Engineering Fee.

After Engineering Fee is paid or Purchase Order placed:

3-4 Weeks:

- Final Engineering – Post-analysis sizing for cables and poles. Includes reaction forces. PRICING AND SIZING ARE SUBJECT TO CHANGE UNTIL FINAL ENGINEERING IS COMPLETED!
- Final Quote – Pricing for everything Structura will provide based on Final Engineering.
- Approval Drawings – Layout, pole, and/or luminaire drawings that must be approved and reviewed prior to release.

After Approval Drawings are returned and deposit (50% of order) is received:

< 1 Week:

- Production – Structura can begin production for all ordered materials.
- Cables – 2-4 Weeks
- Luminaires – 8-10 Weeks
- Poles – 10+ Weeks (Depends on size, quantity, shop capacity, etc.)

MIXED USE DEVELOPMENT

1 CONGRESS STREET/15 CONGRESS STREET
PORTSMOUTH, NEW HAMPSHIRE
SITE PERMIT PLANS

OWNER 1 CONGRESS:
ONE MARKET SQUARE LLC
3 PLEASANT STREET
SUITE #400
PORTSMOUTH, NH 03801
TEL. (603) 427–0725

OWNER 15 CONGRESS:
WENBERRY ASSOCIATES, LLC
C/O CP MANAGEMENT
11 COURT STREET SUITE 100
EXETER, N.H. 03833
TEL: (603) 778–6300

LAND SURVEYOR & CIVIL ENGINEER:
HALEY WARD
200 GRIFFIN ROAD, UNIT 14
PORTSMOUTH, N.H. 03801
Tel. (603) 430–9282
Fax (603) 436–2315

ARCHITECT:
ARCOVE LLC
3 CONGRESS STREET
SUITE 1
PORTSMOUTH, NH 03801
TEL. (603) 731–5187

LANDSCAPE ARCHITECT:
TERRA FIRMA LANDSCAPE ARCHITECTURE
163A COURT STREET
PORTSMOUTH, NH 03801
TEL. (603) 531–9109

GEOTECHNICAL:
GEOTECHNICAL SERVICES INC.
18 COTE AVENUE, UNIT 11
GOFFSTOWN, N.H. 03045
Tel. (603) 624–2722

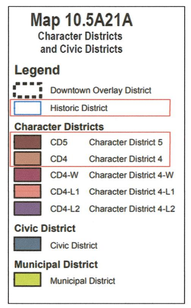

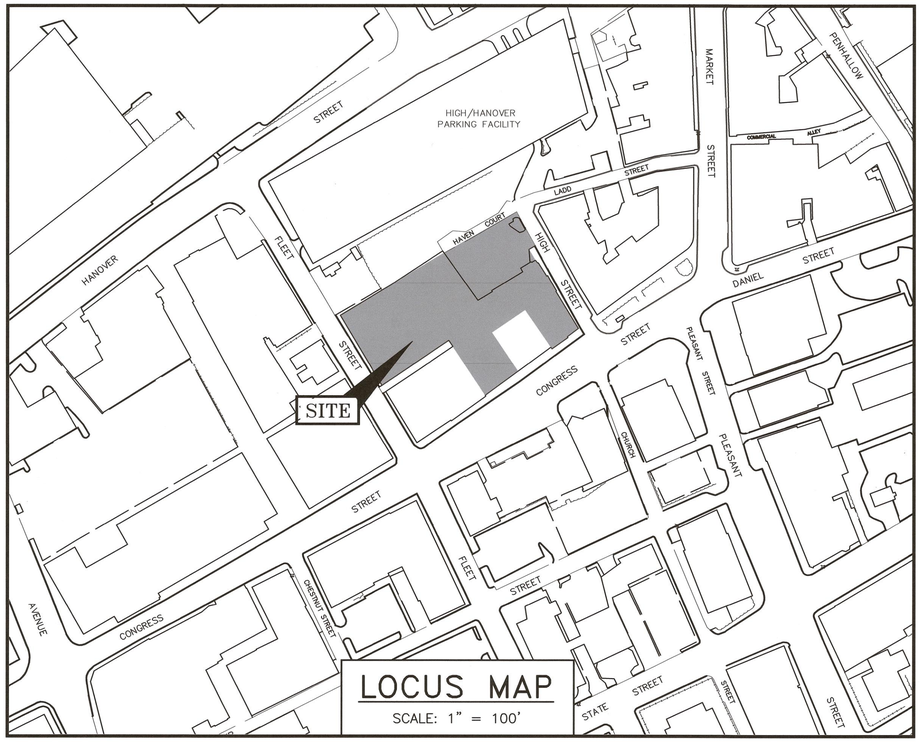

LOCUS MAP
SCALE: 1" = 100'

LEGEND:

EXISTING	PROPOSED		EXISTING	PROPOSED	
		PROPERTY LINE			
		SETBACK	CB	CB	CATCH BASIN
S	S	SEWER PIPE	S	SMH	SEWER MANHOLE
SL	SL	SEWER LATERAL			
G	G	GAS LINE	D	DMH	DRAIN MANHOLE
D	D	STORM DRAIN			
W	W	WATER LINE	T	TMH	TELEPHONE MANHOLE
WS	WS	WATER SERVICE			
UGE	UGE	UNDERGROUND ELECTRIC	14	14	PARKING SPACE COUNT
OHW	OHW	OVERHEAD ELECTRIC/WIRES	PM		PARKING METER
	UD	FOUNDATION DRAIN			
		EDGE OF PAVEMENT (EP)	LSA		LANDSCAPED AREA
100	100	CONTOUR	TBD	TBD	TO BE DETERMINED
97x3	98x0	SPOT ELEVATION	CI	CI	CAST IRON PIPE
		UTILITY POLE	COP	COP	COPPER PIPE
		WALL MOUNTED EXTERIOR LIGHTS	DI	DI	DUCTILE IRON PIPE
			PVC	PVC	POLYVINYL CHLORIDE PIPE
		TRANSFORMER ON CONCRETE PAD	RCP	RCP	REINFORCED CONCRETE PIPE
			AC	–	ASBESTOS CEMENT PIPE
			VC	VC	VITRIFIED CLAY PIPE
		ELECTRIC HANDHOLD	EP	EP	EDGE OF PAVEMENT
WSO GSO	WSO GSO	SHUT OFFS (WATER/GAS)	EL.	EL.	ELEVATION
			FF	FF	FINISHED FLOOR
	GV	GATE VALVE	INV	INV	INVERT
			S =	S =	SLOPE FT/FT
	HYD	HYDRANT	TBM	TBM	TEMPORARY BENCH MARK
			TYP	TYP	TYPICAL

DIG SAFE
ME – NH – RI – VT
1-888-344-7233
CALL TOLL FREE

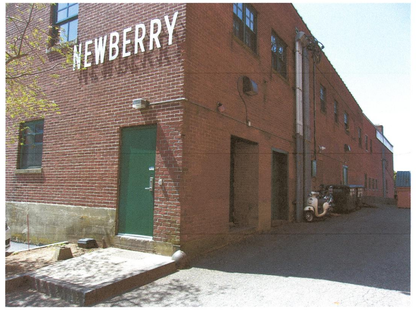

INDEX OF SHEETS

	1 CONGRESS BOUNDARY PLAN
	1 CONGRESS LOT LINE ADJUSTMENT PLAN
V101	15 CONGRESS STANDARD BOUNDARY SURVEY (EXISTING CONDITIONS PLAN) DEVELOPMENT PARCEL
01	EXISTING CONDITIONS ORTHOPHOTO PLAN
C101	DEMOLITION PLAN
C102	PROJECT SITE ZONING PLAN
C103	PROPOSED SITE PLAN
C104	GRADING AND DRAINAGE PLAN
C105	PROPOSED UTILITY PLAN
C106–C107	LIGHTING PLANS
C201	PROPOSED PLAN & PROFILE NEWBERRY WAY
C202	PROPOSED PLAN & PROFILE HIGH STREET
C203	PROPOSED PLAN & PROFILE LADD STREET
PBN.A0–A9	ARCHITECTURAL PLANS
L01–L05	LANDSCAPE PLANS
C501–C505	DETAILS

UTILITY CONTACTS

ELECTRIC:
EVERSOURCE
1700 LAFAYETTE ROAD
PORTSMOUTH, N.H. 03801
Tel. (603) 436–7708, Ext. 555.5678
ATTN: MICHAEL BUSBY, P.E. (MANAGER)

NATURAL GAS:
UNITIL
325 WEST ROAD
PORTSMOUTH, N.H. 03801
Tel. (603) 294–5144
ATTN: DAVE BEAULIEU

CABLE:
COMCAST
155 COMMERCE WAY
PORTSMOUTH, N.H. 03801
Tel. (603) 679–5695 (X1037)
ATTN: MIKE COLLINS

SEWER & WATER:
PORTSMOUTH DEPARTMENT OF PUBLIC WORKS
680 PEVERLY HILL ROAD
PORTSMOUTH, N.H. 03801
Tel. (603) 427–1530
ATTN: JIM TOW

COMMUNICATIONS:
FAIRPOINT COMMUNICATIONS
JOE CONSIDINE
1575 GREENLAND ROAD
GREENLAND, N.H. 03840
Tel. (603) 427–5525

PERMIT LIST:
NHDES SEWER DISCHARGE PERMIT: TO BE SUBMITTED
PORTSMOUTH HDC: PENDING
PORTSMOUTH SITE PLAN: PENDING

PORTSMOUTH APPROVAL CONDITIONS NOTE:
ALL CONDITIONS ON THIS PLAN SET SHALL REMAIN IN EFFECT IN PERPETUITY PURSUANT TO THE REQUIREMENTS OF THE CITY OF PORTSMOUTH SITE PLAN REVIEW REGULATIONS.

APPROVED BY THE PORTSMOUTH PLANNING BOARD

CHAIRMAN _____ DATE _____

SITE PERMIT PLANS
MIXED USE DEVELOPMENT
1 CONGRESS STREET/15 CONGRESS STREET
PORTSMOUTH, N.H.

HALEY WARD
ENGINEERING | ENVIRONMENTAL | SURVEYING
200 Griffin Rd. Unit 14
Portsmouth, New Hampshire 03801
603.430.9282
WWW.HALEYWARD.COM

PLAN SET SUBMITTAL DATE: 18 NOVEMBER 2024

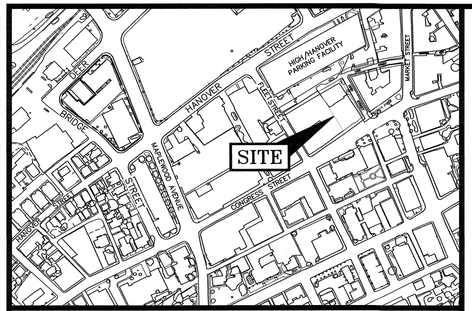

LOCATION MAP

SCALE: 1" = 300'

PLAN REFERENCES:

1) PLAN OF A LOT OF LAND IN PORTSMOUTH N.H. BELONGING TO THE ESTATE OF CHAS. H. MENDUM, SCALE: 1 IN = 20 FT, DATED JULY 1, 1908, PREPARED BY WM. A. GROVER CIVIL ENGINEER, RCRD 00469.
2) LAND ON HAVEN COURT PORTSMOUTH, N.H., F.W. HARTFORD TO HISLOP GARAGE CO., SCALE: 1IN. = 20FT., DATED FEB. 1926, PREPARED BY JOHN W. DURGIN CIVIL ENGINEER, RCRD 00376.
3) LOT PLAN NOS. 7–13 CONGRESS ST. PORTSMOUTH, N.H., SCALE: 1/4 INCH = 1 FOOT, DATED MAR. 1937, PREPARED BY JOHN W. DURGIN CIVIL ENGINEER, NOT RECORDED.
4) PLAN OF LOT NOS. 173 – 181 FLEET ST. PORTSMOUOTH, N.H., SCALE: 1IN. = 20FT., DATED NOV. 1945, PREPARED BY JOHN W. DURGIN CIVIL ENGINEER, NOT RECORDED
5) LAND IN PORTSMOUTH, N.H., RALPH T. WOOD & IRA A. NEWICK TO J.J. NEWBERRY CO., SCALE: 1IN. = 20FT., DATED MAY 1946, PREPARED BY JOHN W. DURGIN CIVIL ENGINEER, RCRD 01243.
6) PLAN OF LOT PORTSMOUTH, N.H., NEWICK & WOOD INC. TO CITY OF PORTSMOUTH, SCALE 1IN. = 40FT., DATED MAR. 1956, PREPARED BY JOHN W. DURGIN CIVIL ENGINEERS, RCRD 02537
7) PLAN OF LOT 26 – 30 HIGH ST. PORTSMOUTH, N.H., SCALE: 1IN. = 10FT., DATED OCT. 1961, PREPARED BY JOHN W. DURGIN CIVIL ENGINEERS, NOT RECORDED
8) PLAN OF LAND FOR RICHARD A. CABRAL & BRUCE E. NADEAU CONGRESS/FLEET ST. COUNTY OF ROCKINGHAM PORTSMOUTH, N.H., SCALE: 1" = 20', DATED JANUARY 1987, PREPARED BY RICHARD P. MILLETTE AND ASSOCIATED, RCRD C–16161
9) EXISTING CONDITIONS PLAN HIGH/HANOVER PARKING FACILITY, HANOVER STREET, PORTSMOUTH, NEW HAMPSHIRE FOR CITY OF PORTSMOUTH, SCALE: 1" = 20', DATED: 5/5/99, PREPARED BY JAMES VERRA AND ASSOCIATES, INC., NOT RECORDED
10) SUBDIVISION OF ASSESSOR'S PARCEL 117/12, LAND OF WENBERRY ASSOCIATES, LLC, FLEET STREET & HAVEN COURT PORTSMOUTH, NEW HAMPSHIRE FOR CITY OF PORTSMOUTH, N.H., SCALE: 1" = 20', DATED 11/22/05, PREPARED BY JAMES VERRA AND ASSOCIATES, INC., RCRD C–34500.
11) STANDARD BOUNDARY SURVEY TAX MAP 17 LOTS 14 & 15, OWNER OF RECORD: PETER H. JARVIS & SONS, LLC, PROPERTY LOCATED AT: 1 CONGRESS STREET & HIGH STREET, CITY OF PORTSMOUTH, COUNTY OF ROCKINGHAM, STATE OF NEW HAMPSHIRE, DATED: NOVEMBER 2021, SCALE: 1" = 20', PREPARED BY AMBIT ENGINEERING, INC., RCRD D–43095.

LEGEND:

N/F	NOW OR FORMERLY
RP	RECORD OF PROBATE
RCRD	ROCKINGHAM COUNTY REGISTRY OF DEEDS
RR SPK	RAILROAD SPIKE
11/21	MAP 11/LOT 21
IR FND	IRON ROD FOUND
IP FND	IRON PIPE FOUND
IR SET	IRON ROD SET
DH FND	DRILL HOLE FOUND
DH SET	DRILL HOLE SET
NHHB	NHDOT BOUND FOUND
TB	TOWN BOUND
BND w/DH	BOUND WITH DRILL HOLE
ST BND w/DH	STONE BOUND WITH DRILL HOLE

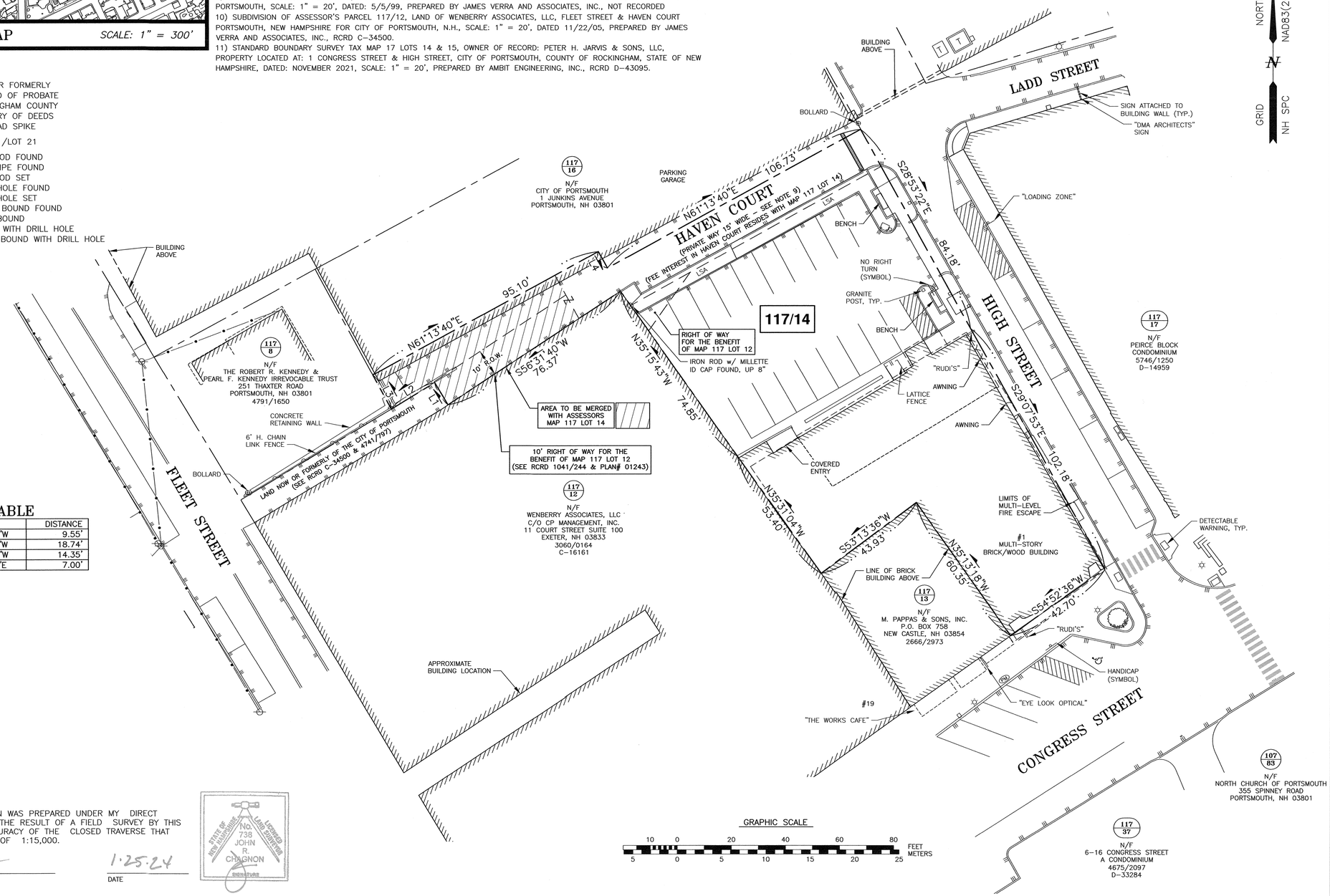

LENGTH TABLE

LINE	BEARING	DISTANCE
L1	N31°13'20"W	9.55'
L2	S58°47'02"W	18.74'
L3	N28°32'20"W	14.35'
L4	S28°46'20"E	7.00'

I CERTIFY THAT THIS PLAN WAS PREPARED UNDER MY DIRECT SUPERVISION, THAT IT IS THE RESULT OF A FIELD SURVEY BY THIS OFFICE AND HAS AN ACCURACY OF THE CLOSED TRAVERSE THAT EXCEEDS THE PRECISION OF 1:15,000.

JOHN R. CHAGNON, LLS 738

1·25·24
DATE

STATE OF NEW HAMPSHIRE — NO. 738 JOHN R. CHAGNON — LICENSED LAND SURVEYOR — SIGNATURE

HALEY WARD
ENGINEERING | ENVIRONMENTAL | SURVEYING
200 Griffin Rd. Unit 14
Portsmouth, New Hampshire 03801
603.430.9282
WWW.HALEYWARD.COM

NOTES:

1) PARCELS ARE SHOWN ON THE CITY OF PORTSMOUTH ASSESSORS MAP 117 AS LOT 14 & AND AN UNNUMBERED PARCEL OF LAND DEPICTED AS A PORTION OF HAVEN COURT.

2) OWNER OF RECORD:
ONE MARKET SQUARE, LLC
3 PLEASANT STREET, SUITE 400
PORTSMOUTH, NH 03801
6363/31 PARCEL 1 & PARCEL 2
6381/1527 NOTICE OF MERGER
6523/28, 6523/32, 6523/2286

3) PARCEL IS LOCATED IN THE CHARACTER DISTRICT 4 AND CHARACTER DISTRICT 5.

4) DIMENSIONAL REQUIREMENTS: SEE PORTSMOUTH ORDINANCE FOR REQUIREMENTS.

5) LOT AREA:
17,724 S.F.
0.4069 ACRES

6) PARCELS ARE NOT IN A SPECIAL FLOOD HAZARD AREA AS SHOWN ON FIRM PANEL 33015C0259F, EFFECTIVE JANUARY 29, 2021

7) THE PURPOSE OF THIS PLAN IS TO SHOW THE RESULTS OF A STANDARD BOUNDARY SURVEY OF ASSESSORS MAP 117 LOT 14 AND AN UNNUMBERED PARCEL OF LAND SITUATED ADJACENT AND WESTERLY OF A PRIVATE WAY OVER LOT 14 KNOWN AS HAVEN COURT.

8) VERTICAL DATUM IS NAVD88. BASIS OF VERTICAL DATUM IS REDUNDANT RTN GNSS OBS.

9) HAVEN COURT IS A PRIVATE WAY 15 FEET WIDE. ALL RIGHTS, TITLE AND INTEREST UNTO SAID HAVEN COURT WERE CONVEYED WITH ASSESSOR'S MAP 117 LOT 15, AS DESCRIBED IN RCRD 983/179, SUBJECT TO RIGHTS OF OTHERS (OTHERS NOT DEFINED ON THIS SURVEY).

10) PARCEL TO BE MERGED WITH ASSESSOR'S MAP 117 LOT 14 WAS ACQUIRED FROM THE HEIRS OF RALPH T. WOOD & IRA A. NEWICK AND IS THE REMAINDER OF THE PARCEL CONVEYED TO WOOD & NEWICK BY DEED OF HARTFORD REAL ESTATE PARTNERSHIP RECORDED AT THE ROCKINGHAM COUNTY REGISTRY OF DEEDS AT BOOK 1042 PAGE 34.

NO.	DESCRIPTION	DATE
0	ISSUED FOR COMMENT	1/25/24

REVISIONS

STANDARD BOUNDARY SURVEY
TAX MAP 117 LOT 14

OWNER OF RECORD:
ONE MARKET SQUARE, LLC

PROPERTY LOCATED AT:
1 CONGRESS STREET
CITY OF PORTSMOUTH
COUNTY OF ROCKINGHAM
STATE OF NEW HAMPSHIRE

SCALE: 1" = 20'
JANUARY 2024

FB 309 PG 15
5010156.3406

P:\NH\5010156-McNabb_Properties\3406-Congress St, Portsmouth-WC2021 Survey and Site Plan\Plans & Specs\Site\3406 Survey 2024.dwg, 8/20/2024 1:20 PM

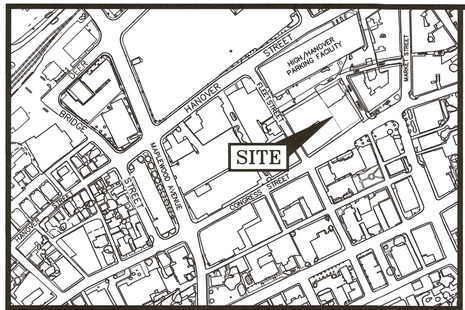

LOCATION MAP SCALE: 1" = 300'

PLAN REFERENCES:

1) PLAN OF A LOT OF LAND IN PORTSMOUTH N.H. BELONGING TO THE ESTATE OF CHAS. H. MENDUM, SCALE: 1 IN = 20 FT, DATED JULY 1, 1908, PREPARED BY WM. A. GROVER CIVIL ENGINEER, RCRD 00469.
2) LAND ON HAVEN COURT PORTSMOUTH, N.H., F.W. HARTFORD TO HISLOP GARAGE CO., SCALE: 1IN. = 20FT., DATED FEB. 1926, PREPARED BY JOHN W. DURGIN CIVIL ENGINEER, RCRD 00376.
3) LOT PLAN NOS. 7–13 CONGRESS ST. PORTSMOUTH, N.H., SCALE: 1/4 INCH = 1 FOOT, DATED MAR. 1937, PREPARED BY JOHN W. DURGIN CIVIL ENGINEER, NOT RECORDED.
4) PLAN OF LOT NOS. 173 – 181 FLEET ST. PORTSMOUOTH, N.H., SCALE: 1IN. = 20FT., DATED NOV. 1945, PREPARED BY JOHN W. DURGIN CIVIL ENGINEER, NOT RECORDED
5) LAND IN PORTSMOUTH, N.H., RALPH T. WOOD & IRA A. NEWICK TO J.J. NEWBERRY CO., SCALE: 1IN. = 20FT., DATED MAY 1946, PREPARED BY JOHN W. DURGIN CIVIL ENGINEER, RCRD 01243.
6) PLAN OF LOT PORTSMOUTH, N.H., NEWICK & WOOD INC. TO CITY OF PORTSMOUTH, SCALE 1IN. = 40FT., DATED MAR. 1956, PREPARED BY JOHN W. DURGIN CIVIL ENGINEERS, RCRD 02537
7) PLAN OF LOT 26 – 30 HIGH ST. PORTSMOUTH, N.H., SCALE: 1IN. = 10FT., DATED OCT. 1961, PREPARED BY JOHN W. DURGIN CIVIL ENGINEERS, NOT RECORDED
8) PLAN OF LAND FOR RICHARD A. CABRAL & BRUCE E. NADEAU CONGRESS/FLEET ST. COUNTY OF ROCKINGHAM PORTSMOUTH, N.H., SCALE: 1" = 20', DATED JANUARY 1987, PREPARED BY RICHARD P. MILLETTE AND ASSOCIATED, RCRD C–16161
9) EXISTING CONDITIONS PLAN HIGH/HANOVER PARKING FACILITY, HANOVER STREET, PORTSMOUTH, NEW HAMPSHIRE FOR CITY OF PORTSMOUTH, SCALE: 1" = 20', DATED: 5/5/99, PREPARED BY JAMES VERRA AND ASSOCIATES, INC., NOT RECORDED
10) SUBDIVISION OF ASSESSOR'S PARCEL 117/12, LAND OF WENBERRY ASSOCIATES, LLC, FLEET STREET & HAVEN COURT PORTSMOUTH, NEW HAMPSHIRE FOR CITY OF PORTSMOUTH, N.H., SCALE: 1" = 20', DATED 11/22/05, PREPARED BY JAMES VERRA AND ASSOCIATES, INC., RCRD C–34500.
11) STANDARD BOUNDARY SURVEY TAX MAP 17 LOTS 14 & 15, OWNER OF RECORD: PETER H. JARVIS & SONS, LLC, PROPERTY LOCATED AT: 1 CONGRESS STREET & HIGH STREET, CITY OF PORTSMOUTH, COUNTY OF ROCKINGHAM, STATE OF NEW HAMPSHIRE, DATED: NOVEMBER 2021, SCALE: 1" = 20', PREPARED BY AMBIT ENGINEERING, INC., RCRD D–43095.

LEGEND:

N/F	NOW OR FORMERLY
RP	RECORD OF PROBATE
RCRD	ROCKINGHAM COUNTY REGISTRY OF DEEDS
RR SPK	RAILROAD SPIKE
11/21	MAP 11/LOT 21
IR FND	IRON ROD FOUND
IP FND	IRON PIPE FOUND
IR SET	IRON ROD SET
DH FND	DRILL HOLE FOUND
DH SET	DRILL HOLE SET
NHHB	NHDOT BOUND FOUND
TB	TOWN BOUND
BND w/DH	BOUND WITH DRILL HOLE
ST BND w/DH	STONE BOUND WITH DRILL HOLE

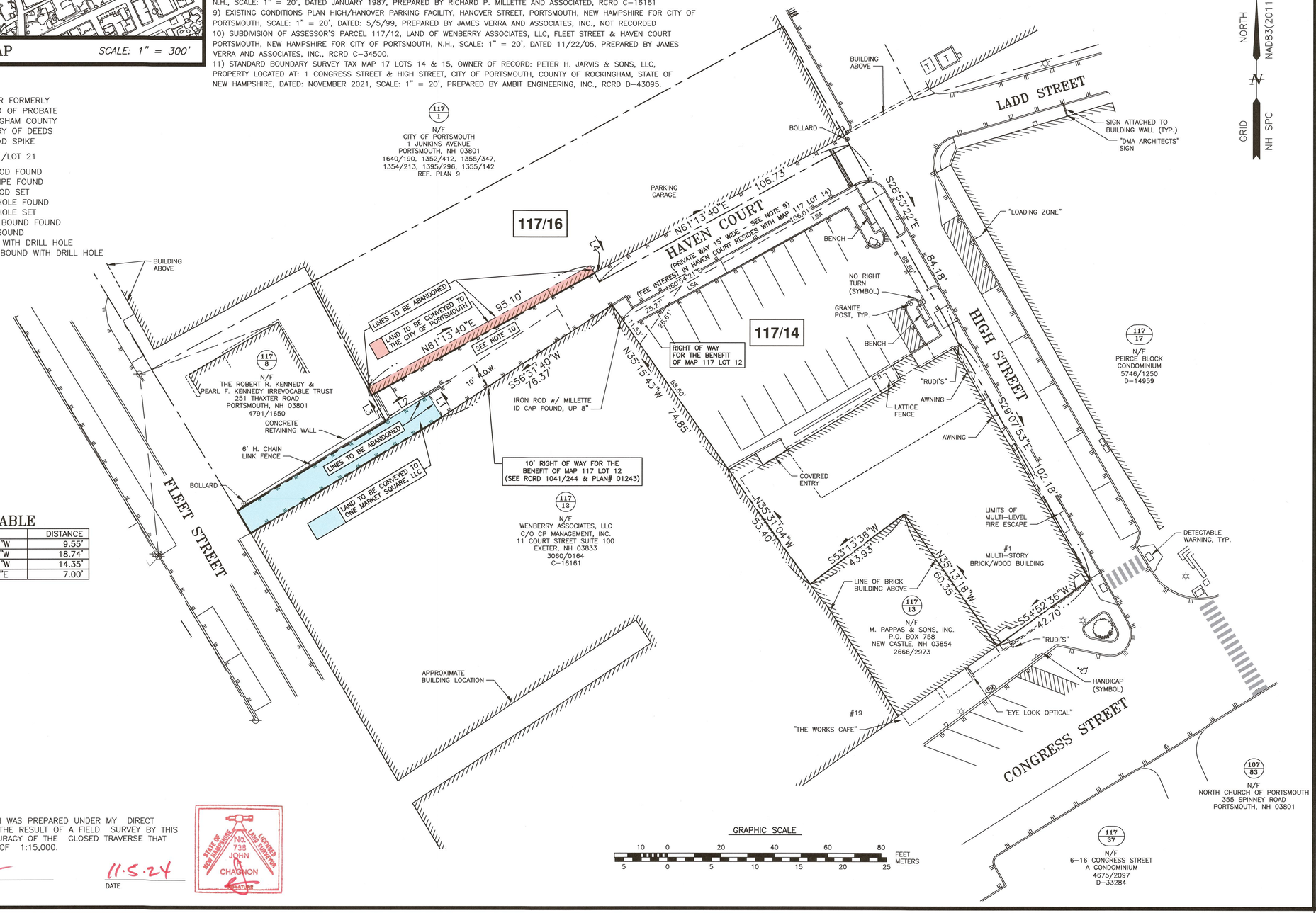

LENGTH TABLE

LINE	BEARING	DISTANCE
L1	N31°13'20"W	9.55'
L2	S58°47'02"W	18.74'
L3	N28°32'20"W	14.35'
L4	S28°46'20"E	7.00'

I CERTIFY THAT THIS PLAN WAS PREPARED UNDER MY DIRECT SUPERVISION, THAT IT IS THE RESULT OF A FIELD SURVEY BY THIS OFFICE AND HAS AN ACCURACY OF THE CLOSED TRAVERSE THAT EXCEEDS THE PRECISION OF 1:15,000.

JOHN R. CHAGNON, LLS ~~738~~

11.5.24
DATE

STATE OF NEW HAMPSHIRE LICENSED LAND SURVEYOR No. 739 JOHN R. CHAGNON

HALEY WARD
ENGINEERING | ENVIRONMENTAL | SURVEYING
200 Griffin Rd. Unit 14
Portsmouth, New Hampshire 03801
603.430.9282
WWW.HALEYWARD.COM

NOTES:

1) PARCELS ARE SHOWN ON THE CITY OF PORTSMOUTH ASSESSORS MAP 117 AS LOTS 14, 16 AND AN UNNUMBERED PARCEL OF LAND DEPICTED AS A PORTION OF HAVEN COURT.

2) OWNERS OF RECORD:

MAP 117 LOT 14
ONE MARKET SQUARE, LLC
3 PLEASANT STREET, SUITE 400
PORTSMOUTH, NH 03801
6363/31 PARCEL 1 & PARCEL 2
6381/1527 NOTICE OF MERGER
6523/28, 6523/32, 6523/2286

MAP 117 LOT 16
CITY OF PORTSMOUTH
1 JUNKINS AVENUE
PORTSMOUTH, NH 03801
3348/505
REF. PLAN 9

PORTION OF HAVEN COURT
CITY OF PORTSMOUTH
1 JUNKINS AVENUE
PORTSMOUTH, NH 03801
4741/797
C–34500

3) MAP 117 LOT 14 IS LOCATED IN CHARACTER DISTRICT 4 AND CHARACTER DISTRICT 5. MAP 117 LOT 16 IS LOCATED IN THE MUNICIPAL DISTRICT.

4) DIMENSIONAL REQUIREMENTS: SEE PORTSMOUTH ORDINANCE FOR REQUIREMENTS.

5) EXISTING LOT AREA:

MAP 117 LOT 14	MAP 117 LOT 16	PORTION OF HAVEN COURT
17,724 S.F.	9,663 S.F.	808 S.F.
0.4069 ACRES	0.2218 ACRES	0.0185 ACRES

PROPOSED LOT AREA:

MAP 114 LOT 14	MAP 117 LOT 16	PORTION OF HAVEN COURT
18,225 S.F.	9,970 S.F.	0 S.F.
0.4184 ACRES	0.2289 ACRES	0.0000 ACRES

6) PARCELS ARE NOT IN A SPECIAL FLOOD HAZARD AREA AS SHOWN ON FIRM PANEL 33015C0259F, EFFECTIVE JANUARY 29, 2021

7) THE PURPOSE OF THIS PLAN IS TO SHOW A LOT LINE ADJUSTMENT BETWEEN ASSESSORS MAP 117 LOTS 14, 16 AND AN UNNUMBERED PARCEL SHOWN AS A PORTION OF HAVEN COURT.

8) VERTICAL DATUM IS NAVD88. BASIS OF VERTICAL DATUM IS REDUNDANT RTN GNSS OBS.

9) HAVEN COURT IS A PRIVATE WAY 15 FEET WIDE. ALL RIGHTS, TITLE AND INTEREST UNTO SAID HAVEN COURT WERE CONVEYED WITH ASSESSOR'S MAP 117 LOT 15, AS DESCRIBED IN RCRD 983/179, SUBJECT TO RIGHTS OF OTHERS (OTHERS NOT DEFINED ON THIS SURVEY).

10) ONE MARKET SQUARE, LLC SHALL CONVEY TO THE CITY A TEN FOOT MAINTENANCE EASEMENT FOR THE AREA ADJACENT TO THE HIGH HANOVER GARAGE FOR MAINTENANCE.

NO.	DESCRIPTION	DATE
1	NOTE 10	11/5/24
0	ISSUED FOR COMMENT	5/30/24

REVISIONS

LOT LINE ADJUSTMENT PLAN
TAX MAP 117 LOTS 14 & 16

OWNERS OF RECORD:
ONE MARKET SQUARE, LLC & CITY OF PORTSMOUTH

PROPERTY LOCATED AT:
1 CONGRESS STREET &
44 HIGH STREET
CITY OF PORTSMOUTH
COUNTY OF ROCKINGHAM
STATE OF NEW HAMPSHIRE

SCALE: 1" = 20' MAY 2024

FB 309 PG 15 5010156.3406

PLAN REFERENCES:

1) PLAN OF A LOT OF LAND IN PORTSMOUTH N.H. BELONGING TO THE ESTATE OF CHAS. H. MENDUM, SCALE: 1 IN = 20 FT, DATED JULY 1, 1908, PREPARED BY WM. A. GROVER CIVIL ENGINEER, RCRD 00469.
2) LAND ON HAVEN COURT PORTSMOUTH, N.H., F.W. HARTFORD TO HISLOP GARAGE CO., SCALE: 1IN. = 20FT., DATED FEB. 1926, PREPARED BY JOHN W. DURGIN CIVIL ENGINEER, RCRD 00376.
3) LOT PLAN NOS. 7–13 CONGRESS ST. PORTSMOUTH, N.H., SCALE: 1/4 INCH = 1 FOOT, DATED MAR. 1937, PREPARED BY JOHN W. DURGIN CIVIL ENGINEER, NOT RECORDED.
4) PLAN OF LOT NOS. 173 – 181 FLEET ST. PORTSMOUOTH, N.H., SCALE: 1IN. = 20FT., DATED NOV. 1945, PREPARED BY JOHN W. DURGIN CIVIL ENGINEER, NOT RECORDED.
5) LAND IN PORTSMOUTH, N.H., RALPH T. WOOD & IRA A. NEWICK TO J.J. NEWBERRY CO., SCALE: 1IN. = 20FT., DATED MAY 1946, PREPARED BY JOHN W. DURGIN CIVIL ENGINEER, RCRD 01243.
6) PLAN OF LOT PORTSMOUTH, N.H., NEWICK & WOOD INC. TO CITY OF PORTSMOUTH, SCALE 1IN. = 40FT., DATED MAR. 1956, PREPARED BY JOHN W. DURGIN CIVIL ENGINEERS, RCRD 02537.
7) PLAN OF LOT 26 – 30 HIGH ST. PORTSMOUTH, N.H., SCALE: 1IN. = 10FT., DATED OCT. 1961, PREPARED BY JOHN W. DURGIN CIVIL ENGINEERS, NOT RECORDED.
8) PLAN OF LAND FOR RICHARD A. CABRAL & BRUCE E. NADEAU CONGRESS/FLEET ST. COUNTY OF ROCKINGHAM PORTSMOUTH, N.H., SCALE: 1" = 20', DATED JANUARY 1987, PREPARED BY RICHARD P. MILLETTE AND ASSOCIATED, RCRD C–16161.
9) EXISTING CONDITIONS PLAN HIGH/HANOVER PARKING FACILITY, HANOVER STREET, PORTSMOUTH, NEW HAMPSHIRE FOR CITY OF PORTSMOUTH, SCALE: 1" = 20', DATED: 5/5/99, PREPARED BY JAMES VERRA AND ASSOCIATES, INC., NOT RECORDED.
10) SUBDIVISION OF ASSESSOR'S PARCEL 117/12, LAND OF WENBERRY ASSOCIATES, LLC, FLEET STREET & HAVEN COURT PORTSMOUTH, NEW HAMPSHIRE FOR CITY OF PORTSMOUTH, N.H., SCALE: 1" = 20', DATED 11/22/05, PREPARED BY JAMES VERRA AND ASSOCIATES, INC., RCRD C–34500.
11) STANDARD BOUNDARY SURVEY TAX MAP 17 LOTS 14 & 15, OWNER OF RECORD: PETER H. JARVIS & SONS, LLC, PROPERTY LOCATED AT: 1 CONGRESS STREET & HIGH STREET, CITY OF PORTSMOUTH, COUNTY OF ROCKINGHAM, STATE OF NEW HAMPSHIRE, DATED: NOVEMBER 2021, SCALE: 1" = 20', PREPARED BY AMBIT ENGINEERING, INC., RCRD D–43095.
12) SITE PLAN FOR HOUSE–GOODMAN LIMITED PARTNERSHIP 43–49 CONGRESS STREET PORTSMOUTH, N.H. PREPARED BY: RICHARD P. MILLETTE AND ASSOCIATES, SCALE: 1"=10', DATED: NOVEMBER 15, 1983, NOT RECORDED.

LEGEND:

N/F	NOW OR FORMERLY
RP	RECORD OF PROBATE
RCRD	ROCKINGHAM COUNTY REGISTRY OF DEEDS
RR SPK	RAILROAD SPIKE
11/21	MAP 11/LOT 21
IR FND	IRON ROD FOUND
IP FND	IRON PIPE FOUND
IR SET	IRON ROD SET
DH FND	DRILL HOLE FOUND
DH SET	DRILL HOLE SET
	BOUND FOUND
S	SEWER LINE
G	GAS LINE
D	STORM DRAIN
W	WATER LINE
UE	UNDERGROUND ELECTRIC
	OVERHEAD ELECTRIC/WIRES
100	CONTOUR
97x3	SPOT ELEVATION
	EDGE OF PAVEMENT (EP)
	UTILITY POLE
WSO	WATER SHUT OFF/CURB STOP
GSO	GAS SHUT OFF
GV	GATE VALVE
HYD	HYDRANT
G W E	METER (GAS, WATER, ELECTRIC)
	CATCH BASIN
	TELEPHONE MANHOLE
	SEWER MANHOLE
	DRAIN MANHOLE
EL.	ELEVATION
EP	EDGE OF PAVEMENT
FF	FINISHED FLOOR
INV	INVERT
TBM	TEMPORARY BENCH MARK
TYP	TYPICAL
VGC/SGC	VERTICAL/SLOPED GRANITE CURB

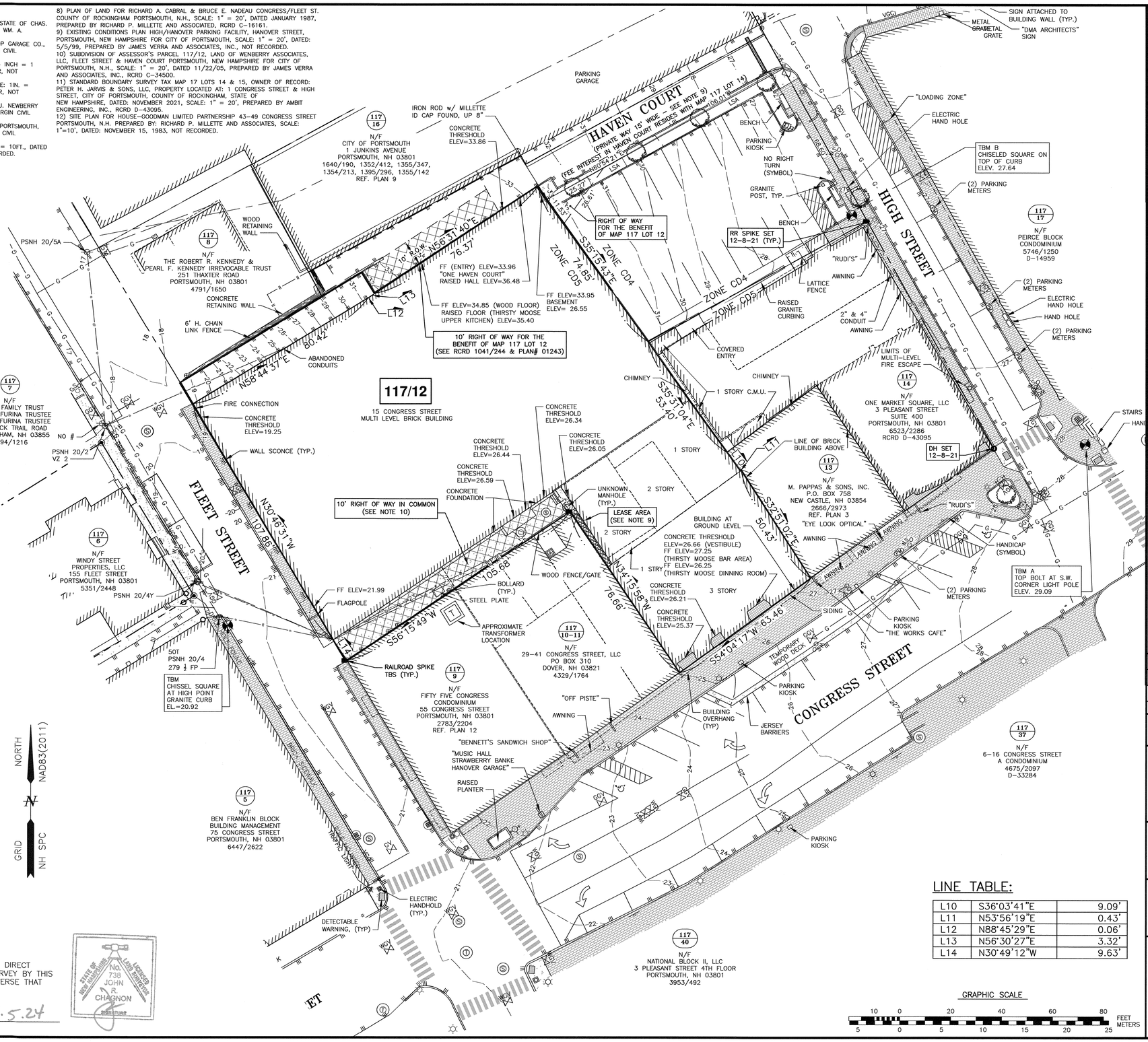

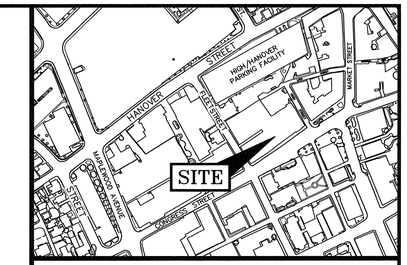

LOCATION MAP 1" = 300'

NOTES:

1) PARCEL IS SHOWN ON THE CITY OF PORTSMOUTH ASSESSORS MAP 117 AS LOT 12.

2) OWNERS OF RECORD:
WENBERRY ASSOCIATES, LLC
C/O CP MANAGEMENT
11 COURT STREET SUITE 100
EXETER, N.H. 03833
3060/164

3) PARCEL IS LOCATED IN CHARACTER DISTRICT 5.

4) DIMENSIONAL REQUIREMENTS: SEE PORTSMOUTH ORDINANCE FOR REQUIREMENTS.

5) EXISTING LOT AREA:

LOT 12 AREA:
23,708 S.F.
0.5443 ACRES

LOT 14 AREA (AFTER LLR):
18,225 S.F.
0.4184 ACRES

PROPOSED COMBINED LOT AREA:
41,933 S.F.
0.9626 ACRES

6) PARCELS ARE NOT IN A SPECIAL FLOOD HAZARD AREA AS SHOWN ON FIRM PANEL 33015C0259F, EFFECTIVE JANUARY 29, 2021

7) THE PURPOSE OF THIS PLAN IS TO SHOW THE RESULTS OF A STANDARD BOUNDARY SURVEY AND EXISTING CONDITIONS ON ASSESSORS MAP 117 LOT 12.

8) VERTICAL DATUM IS NAVD88. BASIS OF VERTICAL DATUM IS REDUNDANT RTN GNSS OBS.

9) PARCEL IS SUBJECT TO A LEASE AGREEMENT FOR A PORTION OF LESSEE'S WALL IS ENCROACHING ON SUBJEST PARCEL. SEE RCRD 1512/410 & 1690/130.

10) PARCEL IS SUBJECT TO A RIGHT OF WAY IN COMMON FOR PASSAGE AND UTILITIES AND GENERAL PURPOSES PER DEEDS. SEE RCRD 322/318, 322/380, 322/381, 348/80, 348/81, 348/82, 1484/44, 2713/797, AND RCRD C–16161.

11) PARCEL IS SUBJECT TO A UTILITY EASEMENT TO P.S.N.H. FROM UTILITY POLE 20/4 ON FLEET STREET EASTERLY TO GRANTORS EASTERLY BOUNDARY. SEE RCRD 3124/695.

12) HAVEN COURT IS A PRIVATE WAY 15 FEET WIDE. ALL RIGHTS, TITLE AND INTEREST UNTO SAID HAVEN COURT WERE CONVEYED WITH ASSESSOR'S MAP 117 LOT 15, AS DESCRIBED IN RCRD 983/179, SUBJECT TO RIGHTS OF OTHERS (OTHERS NOT DEFINED ON THIS SURVEY).

No.	DATE	DESCRIPTION	BY	CHK.
2	11/5/24	ISSUED FOR COMMENT	EDS	JRC
1	8/15/24	PARTY WALL	RJB	JRC
0	7/24/24	ISSUED FOR COMMENT	RJB	JRC

DRAWING ISSUE STATUS

SITE SURVEY

HALEY WARD
ENGINEERING | ENVIRONMENTAL | SURVEYING
200 Griffin Rd. Unit 14
Portsmouth, New Hampshire 03801
603.430.9282
WWW.HALEYWARD.COM

PROJECT

APPLICANT: ONE MARKET SQUARE, LLC
1-15 CONGRESS STREET PORTSMOUTH, N.H.

TITLE

15 CONGRESS
STANDARD BOUNDARY SURVEY &
EXISTING CONDITIONS PLAN
OF THE DEVELOPMENT PARCEL

DATE: JULY 2024	SCALE: 1" = 20'
DRAWN BY: RJB	DESIGNED BY: — / CHECKED BY: JRC
PROJECT No.: 5010156.01	FIELD BOOK & PAGE: FB 309 PG 54
SHEET No.: V101	REV.: 2

LINE TABLE:

L10	S36°03'41"E	9.09'
L11	N53°56'19"E	0.43'
L12	N88°45'29"E	0.06'
L13	N56°30'27"E	3.32'
L14	N30°49'12"W	9.63'

GRAPHIC SCALE
10 0 20 40 60 80 FEET
5 0 5 10 15 20 25 METERS

I CERTIFY THAT THIS PLAN WAS PREPARED UNDER MY DIRECT SUPERVISION, THAT IT IS THE RESULT OF A FIELD SURVEY BY THIS OFFICE AND HAS AN ACCURACY OF THE CLOSED TRAVERSE THAT EXCEEDS THE PRECISION OF 1:15,000.

JOHN R. CHAGNON, LLS 738 — DATE 11.5.24

STATE OF NEW HAMPSHIRE LICENSED LAND SURVEYOR No. 738 JOHN R. CHAGNON SIGNATURE

P:\5010156-NAOMA_Properties\400-Congress St.-Portsmouth-JR\2024 Site Plan\Plans & Specs\Dwgs\400 J-Vwenberry Existing Conditions 2024.dwg 11/1/2024 13:19 PM, Comp: 10.0000 - Dwg

NORTH
NAD83(2011)
N
GRID
NH SPC

NOTE:
1) THE PURPOSE OF THIS PLAN IS TO SHOW THE EXISTING AERIAL VIEW OF THE PROJECT VICINITY.

GRAPHIC SCALE

0 50 100 120 FEET
0 10 20 30 METERS

No.	DATE	DESCRIPTION	BY	CHK
0	7/31/24	ISSUED FOR COMMENT	SJR	JRC

DRAWING ISSUE STATUS

SITE PLAN

HALEY WARD
ENGINEERING | ENVIRONMENTAL | SURVEYING
200 Griffin Rd. Unit 14
Portsmouth, New Hampshire 03801
603.430.9282
WWW.HALEYWARD.COM

PROJECT

APPLICANT: ONE MARKET SQUARE, LLC
1 & 15 CONGRESS STREET PORTSMOUTH, N.H.

TITLE

EXISTING CONDITIONS ORTHO PHOTO

DATE	SCALE
JULY 2024	1" = 30'

DRAWN BY	DESIGNED BY	CHECKED BY
SJR	JRC	JRC

PROJECT No.	FIELD BOOK & PAGE
50101156.01	FB 309 PG 54

SHEET No.

DWG No. 01

DEMOLITION NOTES

A) THE LOCATIONS OF UNDERGROUND UTILITIES ARE APPROXIMATE AND THE LOCATIONS ARE NOT GUARANTEED BY THE OWNER OR THE DESIGNER. IT IS THE CONTRACTORS' RESPONSIBILITY TO LOCATE UTILITIES AND ANTICIPATE CONFLICTS. CONTRACTOR SHALL REPAIR EXISTING UTILITIES DAMAGED BY THEIR WORK AND RELOCATE EXISTING UTILITIES THAT ARE REQUIRED TO BE RELOCATED PRIOR TO COMMENCING ANY WORK IN THE IMPACTED AREA OF THE PROJECT.

B) ALL MATERIALS SCHEDULED TO BE REMOVED SHALL BECOME THE PROPERTY OF THE CONTRACTORS UNLESS OTHERWISE SPECIFIED. THE CONTRACTOR SHALL DISPOSE OF ALL MATERIALS OFF-SITE IN ACCORDANCE WITH ALL FEDERAL, STATE, AND LOCAL REGULATIONS, ORDINANCES AND CODES. THE CONTRACTOR SHALL COORDINATE REMOVAL, RELOCATION, DISPOSAL, OR SALVAGE OF UTILITIES WITH THE OWNER AND APPROPRIATE UTILITY COMPANY.

C) ANY EXISTING WORK OR PROPERTY DAMAGED OR DISRUPTED BY CONSTRUCTION/ DEMOLITION ACTIVITIES SHALL BE REPLACED OR REPAIRED TO THE ORIGINAL EXISTING CONDITIONS BY THE CONTRACTOR AT NO ADDITIONAL COST TO THE OWNER.

D) THE CONTRACTOR SHALL VERIFY LOCATION OF ALL EXISTING UTILITIES AND CALL DIG SAFE AT LEAST 72 HOURS PRIOR TO THE COMMENCEMENT OF ANY DEMOLITION/CONSTRUCTION ACTIVITIES.

E) SAWCUT AND REMOVE PAVEMENT ONE FOOT OFF PROPOSED EDGE OF PAVEMENT TRENCH IN AREAS WHERE PAVEMENT IS TO BE REMOVED.

F) IT IS THE CONTRACTOR'S RESPONSIBILITY TO FAMILIARIZE THEMSELVES WITH THE CONDITIONS OF ALL THE PERMIT APPROVALS.

G) THE CONTRACTOR SHALL OBTAIN AND PAY FOR ADDITIONAL CONSTRUCTION PERMITS, NOTICES AND FEES NECESSARY TO COMPLETE THE WORK AND ARRANGE FOR AND PAY FOR ANY INSPECTIONS AND APPROVALS FROM THE AUTHORITIES HAVING JURISDICTION. THE CONTRACTOR SHALL BE RESPONSIBLE FOR ANY ADDITIONAL AND OFF-SITE DISPOSAL OF MATERIALS REQUIRED TO COMPLETE THE WORK.

H) THE CONTRACTOR SHALL REMOVE AND DISPOSE OF ALL EXISTING STRUCTURES, CONCRETE, UTILITIES, VEGETATION, PAVEMENT, AND CONTAMINATED SOIL WITHIN THE WORK LIMITS SHOWN UNLESS SPECIFICALLY IDENTIFIED TO REMAIN. ANY EXISTING DOMESTIC / IRRIGATION SERVICE WELLS IN THE PROJECT AREA IDENTIFIED DURING THE CONSTRUCTION AND NOT CALLED OUT ON THE PLANS SHALL BE BROUGHT TO THE ATTENTION OF THE OWNER AND ENGINEER FOR PROPER CAPPING / RE-USE.

I) ALL WORK WITHIN THE CITY OF PORTSMOUTH RIGHT OF WAY SHALL BE COORDINATED WITH THE CITY OF PORTSMOUTH DEPARTMENT OF PUBLIC WORKS (DPW).

J) REMOVE TREES AND BRUSH AS REQUIRED FOR COMPLETION OF WORK. CONTRACTOR SHALL GRUB AND REMOVE ALL STUMPS WITHIN LIMITS OF WORK AND DISPOSE OF OFF-SITE IN ACCORDANCE WITH FEDERAL, STATE, AND LOCAL LAWS AND REGULATIONS.

K) CONTRACTOR SHALL PROTECT ALL PROPERTY MONUMENTATION THROUGHOUT DEMOLITION AND CONSTRUCTION OPERATIONS. SHOULD ANY MONUMENTATION BE DISTURBED, THE CONTRACTOR SHALL EMPLOY A NH LICENSED LAND SURVEYOR TO REPLACE THEM.

L) PROVIDE INLET PROTECTION BARRIERS AT ALL CATCH BASINS WITHIN CONSTRUCTION LIMITS AND MAINTAIN FOR THE DURATION OF THE PROJECT. INLET PROTECTION BARRIERS SHALL BE HIGH FLOW SILT SACK BY ACF ENVIRONMENTAL OR APPROVED EQUAL. INSPECT BARRIERS WEEKLY AND AFTER EACH RAIN OF 0.25 INCHES OR GREATER. CONTRACTOR SHALL COMPLETE A MAINTENANCE INSPECTION REPORT AFTER EACH INSPECTION. SEDIMENT DEPOSITS SHALL BE REMOVED AFTER EACH STORM EVENT OR MORE OFTEN IF WARRANTED OR FABRIC BECOMES CLOGGED. EROSION CONTROL MEASURES SHALL BE INSTALLED PRIOR TO THE START OF ANY CLEARING OR DEMOLITION ACTIVITIES.

M) THE CONTRACTOR SHALL PAY ALL COSTS NECESSARY FOR TEMPORARY PARTITIONING, BARRICADING, FENCING, SECURITY AND SAFELY DEVICES REQUIRED FOR THE MAINTENANCE OF A CLEAN AND SAFE CONSTRUCTION SITE.

N) ANY CONTAMINATED MATERIAL REMOVED DURING THE COURSE OF THE WORK WILL REQUIRE HANDLING IN ACCORDANCE WITH NHDES REGULATIONS. CONTRACTOR SHALL HAVE A HEALTH AND SAFETY PLAN IN PLACE, AND COMPLY WITH ALL APPLICABLE PERMITS, APPROVALS, AUTHORIZATIONS, AND REGULATIONS

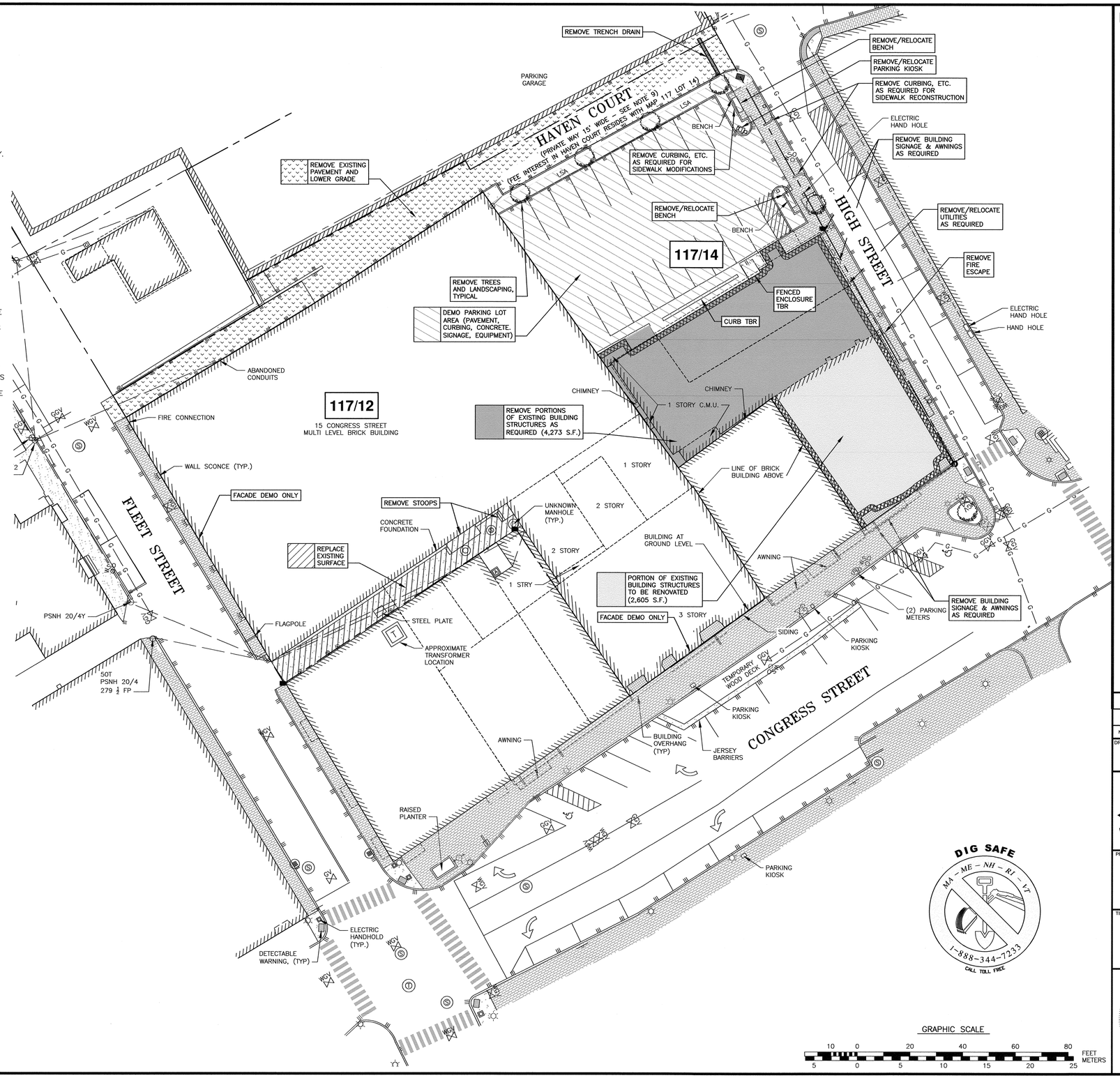

NOTES:

1) THE CONTRACTOR SHALL NOTIFY DIG SAFE AT 1-888-DIG-SAFE (1-888-344-7233) AT LEAST 72 HOURS PRIOR TO COMMENCING ANY EXCAVATION ON PUBLIC OR PRIVATE PROPERTY WITHIN 100 FEET OF UNDERGROUND UTILITIES. THE EXCAVATOR IS RESPONSIBLE TO MAINTAIN MARKS. DIG SAFE TICKETS EXPIRE IN THIRTY DAYS.

2) UNDERGROUND UTILITY LOCATIONS ARE BASED UPON BEST AVAILABLE EVIDENCE AND ARE NOT FIELD VERIFIED. LOCATING AND PROTECTING ANY ABOVEGROUND OR UNDERGROUND UTILITIES IS THE SOLE RESPONSIBILITY OF THE CONTRACTOR AND/OR THE OWNER. UTILITY CONFLICTS SHOULD BE REPORTED AT ONCE TO THE DESIGN ENGINEER.

3) CONTRACTOR SHALL INSTALL AND MAINTAIN EROSION CONTROL MEASURES IN ACCORDANCE WITH THE "NEW HAMPSHIRE STORMWATER MANUAL, VOLUME 3, EROSION AND SEDIMENT CONTROLS DURING CONSTRUCTION. (NHDES DECEMBER 2008).

No.	DATE	DESCRIPTION	BY	CHK
1	11/5/24	DEMO TRENCH DRAIN	EDS	JRC
0	7/31/24	ISSUED FOR COMMENT	SJR	JRC

DRAWING ISSUE STATUS

SITE PLAN

HALEY WARD
ENGINEERING | ENVIRONMENTAL | SURVEYING
200 Griffin Rd. Unit 14
Portsmouth, New Hampshire 03801
603.430.9282
WWW.HALEYWARD.COM

PROJECT

APPLICANT: ONE MARKET SQUARE, LLC
1 & 15 CONGRESS STREET PORTSMOUTH, N.H.

TITLE

DEMOLITION PLAN

STATE OF NEW HAMPSHIRE JOHN R. CHAGNON No. 7851 LICENSED PROFESSIONAL ENGINEER

DATE	SCALE
JULY 2024	1" = 20'

DRAWN BY	DESIGNED BY	CHECKED BY
SJR	JRC	JRC

PROJECT No.	FIELD BOOK & PAGE
5010156.01	FB 309 PG 54

SHEET No.	REV.
C101	1

P:\5010156 - Michaels_Properties\MAS-Congress St, Portsmouth - NH\2024 Site Plan\Plans & Specs\Site\Current\MAS Site Concept 2024.dwg, 11/7/2024 1:48:58 PM, Canon TX-6000, Plotter

1 & 15 Congress Street Unit/Parking Analysis November 18, 2024					
Level	**Room No.**	**# bedrooms**	**Area (sf)**	**spaces/unit**	
2	1.211	1	1257	1.3	
2	1.212	1	1393	1.3	
3	1.304	1	704	1.0	
3	1.302	1	1023	1.3	
3	1.303	1	1047	1.3	
3	1.305	1	1268	1.3	
3	1.306	1	1320	1.3	
3	1.309	1	1612	1.3	
4	1.404	1	676	1.0	studio
4	1.402	1	1009	1.3	
4	1.403	1	1040	1.3	
4	1.406	1	1247	1.3	
4	1.405	1	1305	1.3	
4	1.409	1	1577	1.3	
2	15.207	2	1303	1.3	
2	15.208	2	1629	1.3	
3	1.301	2	1267	1.3	
3	15.307	2	1298	1.3	
3	15.311	2	1436	1.3	
3	15.308	2	1629	1.3	
4	1.401	2	1220	1.3	
4	1.408	2	2835	1.3	
4	1.407	2	3169	1.3	
2	15.202	3	1714	1.3	
2	15.206	3	1722	1.3	
2	15.203	3	1727	1.3	
2	15.204	3	1733	1.3	
2	15.210	3	1831	1.3	
2	15.205	3	1948	1.3	
2	15.201	3	2117	1.3	
2	15.209	3	2157	1.3	
3	15.302	3	1713	1.3	
3	15.306	3	1725	1.3	
3	15.303	3	1726	1.3	
3	15.304	3	1744	1.3	
3	15.310	3	1840	1.3	
3	15.305	3	1937	1.3	
3	15.301	3	2100	1.3	
3	15.309	3	2160	1.3	
2	15.211	4	2462	1.3	

	Total Units	al bedrooms	Parking Req.
Total Units:	**40**	**84**	51.40
Visitor Parking - 1 space per every 5 dwellings			8.00
Downtown Overlay District deduct			(4.00)
Subtotal - Residential automobile parking required			55.40

	# excess bike spaces		# car spaces deducted	
Bicycle parking deduction 1	28.0			
max 5% allowe	2.77	parking spaces	Rounded dn	(2.00)
Total Residential Auto Parking Required (adjusted)			Rounded Up	**53**

Restaurant/Retail/Office - No Parking Required in Downtown Overlay District

Building	**level**	**Room No.**	**use**	**sf**	**TOTAL**
1 Congress	2		Office	8,426	
total office use					**8,426**
1 Congress	1		Restaurant	474	
15 Congress	1		Restaurant	8,663	
total restaurant use					**9,137**
1 Congress	0		Retail	2,502	
1 Congress	1	1	Retail	1,268	
1 Congress	1	2	Retail	1,251	
1 Congress	1	3	Retail	1,572	
1 Congress	1	4	Retail	1,856	
1 Congress	1	5	Retail	3,083	
15 Congress	1	6	Retail	1,946	
15 Congress	1	7	Retail	2,749	
15 Congress	1	8	Retail	2,714	
15 Congress	1	9	Retail	3,551	
15 Congress	1	10	Retail	1,824	
total retail use					**24,318**

Total parking proposed	**21**
EXCESS (Defecit)	**(32)**
Existing total available-	19
Proposed Net **Increase** (reduction) in parking	**2**

TOTAL PROPOSED BUILDING UPPER LEVEL: 36,045 S.F.

IMPERVIOUS SURFACE AREAS 117/12&14
(TO PROPERTY LINE)

STRUCTURE	PRE–CONSTRUCTION IMPERVIOUS (S.F.)	POST–CONSTRUCTION IMPERVIOUS (S.F.)
MAIN STRUCTURE	29,931	35,755
CONCRETE	1,225	3,323
BRICK SIDEWALK	416	255
PAVEMENT	9530	0
CURB	138	258
TOTAL	41240	39591
LOT SIZE	41,933	41,933
% LOT COVERAGE	98.3%	94.4%

Car Parking Spaces Required per Unit Size	
0-500	0.5
500-750	1.0
751+	1.3

Bicycle Parking Required		
use	**spaces required per use**	**total required**
multifamily	1 bicycle for every 5 dwelling units	8
TOTAL Required		**8**
Total Provided (in building, basement)		36
Total Provided (outside)		0
Total Provided, inside & outside		**36**
Excess Provided (beyond required)		28 DEDUCTED @ 1:6
Scooter parking provided (none required)		
Motorcycle parking provided (none required)		

Apartment Types - Unit Mix & Locations

level	**S**	**1**	**2**	**3**	**4**	**Total**
	number of bedrooms per apartment					
4	1	5	3			9
3		6	4	8		18
2		2	2	8	1	13
total apartments	**1**	**13**	**9**	**16**	**1**	**40**
Total bedrooms	1	13	18	48	4	84

PROPOSED BUILDING USES		
FLOOR	1 CONGRESS	15 CONGRESS
4	residential dwellings	rooftop penthouse (lounge), stair & elevator access, roof decks.
3	residential dwellings	residential dwellings
2	residential dwellings & office	residential dwellings
1	retail	restaurant & retail
0	parking & storage, MEP/utility rooms	residential shared laundry, lounge, kitchen & dining; general storage, MEP/utility rooms

1 Congress Street and 15 Congress Street; Zoning

The project is a combination of previously approved 1 Congress Street (Tax Map 117 – Lot 14, LU – 22-12), hereinafter referred to as "One Market Square", with property located at 15 Congress Street (Tax Map 117 – Lot 12), hereinafter referred to as "JJ Newberry". The proposal is to merge the lots and re-develop the combined lot according to the attached site plans.

On the merged lot, we are requesting a Conditional Use Permit in accordance with Section 10.241.23(a) of the Zoning Ordinance and a Parking Conditional Use Permit as provided for in Section 10.1112.14 of the Zoning Ordinance.

The JJ Newberry project consists of rehabilitation and adaptive reuse of the existing structure(s) with minor accessory additions. New projecting storefronts with recessed entrance stoops are proposed along the north elevation of the property to create a retail experience in a re-imaged, pedestrian friendly corridor connecting High Street and Fleet Street. This area, previously known as Haven Court, is proposed to be re-named Newberry Way.

The proposed Newberry Way connection is supported by the Master Plan as part of an overall connection running from McIntyre and potentially to Vaughan Mall. Significant improvements are proposed for Newberry Way including changing the grade, installing underground utilities, hardscape impervious and porous pavers, catenary lights, and landscaping. The design plans include the proposed improvements on Ladd Street & High Street, which the applicant is willing to fund at their sole cost. The applicant finalized a Memorandum of Understanding with the Portsmouth City Council as a part of the 1 Congress Street site plan approval. The memorandum stipulates that One Congress, LLC will pay the entire cost of design and construction of the improvements, thereby not requiring the City of Portsmouth to pay the costs for the proposed improvements to the city's downtown infrastructure shown in this application. Please note the following in regard to the signed Memorandum of Understanding:

- The plans that were contemplated and approved show the removal of existing parking spaces on High Street. This is a key component of the proposed street improvement design. The developer is of the understanding that the Memorandum of Understanding allows that plan to move forward.
- Part I Developers Obligations A.4 and A.5 regarding pedestrian access to the High Hanover Parking Garage and the stairway connection would be revised due to the change of proposed grading on Newberry Way, as the contemplated stairway is being replaced by a continuous grade. The design team will work with the city to identify if alternative pedestrian access to the parking garage is achievable in the revised design.
- Part I Developers Obligations B.7 regarding permissions for construction on the Wenberry parcel has been met by the developers acquisition of the property in a binding purchase and sales agreement.
- Part II City's Obligations 2, the developer is of the understanding that the city will procure a third-party study of the feasibility of a shared trash and recycling area within the High Hanover Garage. The developer is willing to pay for the capital improvements, management and long-term maintenance of the trash and recycling room.
- Part II City's Obligations 3, the developer is of the understanding that the city will procure a third-party study by an experienced land use firm and Parking/traffic engineer for the three entrances to the High Hanover Garage so the City may consider any changes to those entrances. The applicant favors and recommends the city close the High Street entrance to the High Hanover Garage to reduce traffic driving through Market Square.

The City Council, by vote of August 21, 2023, expressly delegated authority to the City Manager to negotiate, convey and/or accept land interests, negotiate, execute and record as necessary any and all easements, licenses, joint use agreements or other documents reasonably necessary for the purposes of the Memorandum of Understanding.

LEGEND:

2–3 STORIES 40FT MAX.

2–3 STORIES (SHORT 4TH*) 45FT MAX.

*PENTHOUSE LEVELS MAY EXCEED THE BUILDING HEIGHT BY 2 FEET

GRAPHIC SCALE

40 30 20 10 0 50 100 150 FEET

10 5 0 10 20 30 40 50 METERS

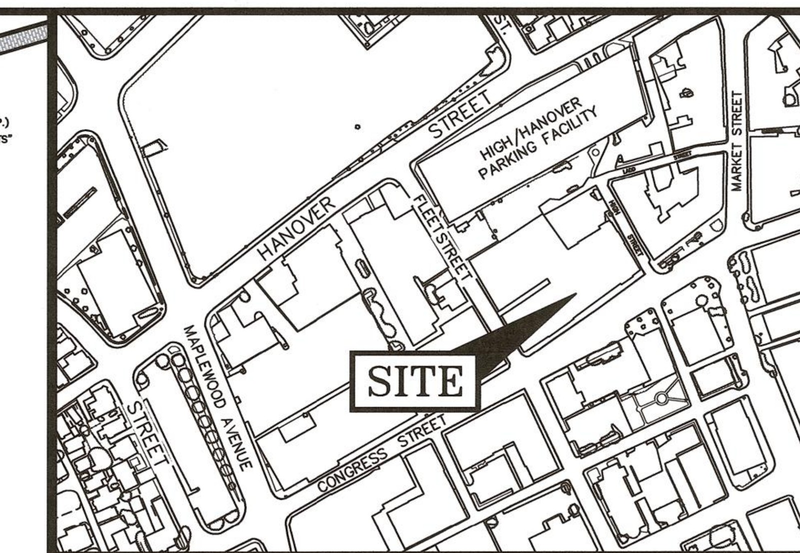

LOCATION MAP 1" = 300'

NOTES:

1) PARCEL IS SHOWN ON THE CITY OF PORTSMOUTH ASSESSORS MAP 117 AS LOTS 12 AND 14.

2) OWNER OF RECORD:
WENBERRY ASSOCIATES, LLC
C/O CP MANAGEMENT
11 COURT STREET SUITE 100
EXETER, N.H. 03833
3060/164

OWNER/APPLICANT:
ONE MARKET SQUARE, LLC
3 PLEASANT STREET, SUITE #400
PORTSMOUTH, NH 03801
6363/31 PARCEL 1 & PARCEL 2

3) PARCEL IS LOCATED IN CHARACTER DISTRICTS 4 AND 5.

4) DIMENSIONAL REQUIREMENTS: SEE PORTSMOUTH ORDINANCE FOR REQUIREMENTS.

5) LOT 12 AREA:
23,708 S.F.
0.5443 ACRES

LOT 14 AREA (AFTER LLR):
18,225 S.F.
0.4184 ACRES

PROPOSED COMBINED LOT AREA:
41,933 S.F.
0.9626 ACRES

6) PARCELS ARE NOT IN A SPECIAL FLOOD HAZARD AREA AS SHOWN ON FIRM PANEL 33015C0259F, EFFECTIVE JANUARY 29, 2021

7) THE PURPOSE OF THIS PLAN IS TO SHOW A PROPOSED MIXED USE DEVELOPMENT ON ASSESSORS MAP 117 LOT 12.

8) VERTICAL DATUM IS NAVD88. BASIS OF VERTICAL DATUM IS REDUNDANT RTN GNSS OBS.

FIGURE 10.5A41.10C DEVELOPMENT STANDARDS CHARACTER DISTRICT 4 (CD4)

CD4 - Character District 4

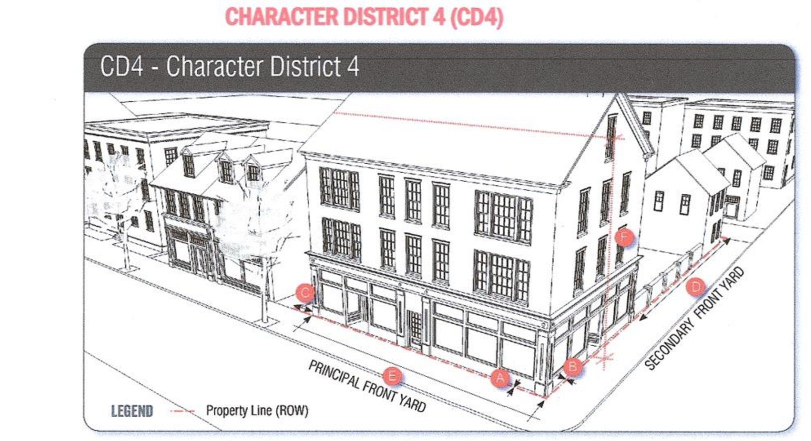

BUILDING PLACEMENT – PRINCIPAL BUILDING*

Maximum **principal front yard**	10 ft	A
Maximum **secondary front yard**	15 ft	B
Side yard	NR	C
Minimum **rear yard**	Greater of 5 ft **from rear lot line** or 10 ft from center line of alley	D
Front lot line buildout On Ceres Street	50% max. (See Map 10.5A21C)	
Everywhere else	50% min.	

* Except for items listed under Section 10.5A42.12

BUILDING AND LOT OCCUPATION

Maximum **building block length**	200 ft	E
Maximum **façade** modulation length	80 ft (see Section 10.5A43.20)	
Maximum **entrance spacing**	50 ft	
Maximum **building coverage**	90%	
Maximum **building footprint**	15,000 sf (or as allowed by Section 10.5A43.40)	

Minimum **lot area**	NR
Minimum **lot area** per **dwelling unit**	NR
Minimum **open space**	10%
Maximum **ground floor GFA** per **use**	15,000 sf

BUILDING FORM – PRINCIPAL BUILDING

Building height	See Map 10.5A21.B & Section 10.5A43.30	F
Maximum finished floor surface of **ground floor** above **sidewalk** grade	36"	
Minimum **ground story height**	12 ft	
Minimum second **story height**	10 ft	
Façade glazing: **Shopfront façade**	70% min.	
Other **façade** types	20% min. to 50% max.	
Roof type	flat, gable, hip, gambrel, **mansard**	
Roof pitch, if any: Gable	6:12 min. to 12:12 max	
Hip	3:12 min.	
Mansard/gambrel	6:12 min. to 30:12 max.	

FIGURE 10.5A41.10D DEVELOPMENT STANDARDS CHARACTER DISTRICT 5 (CD5)

CD5 - Character District 5

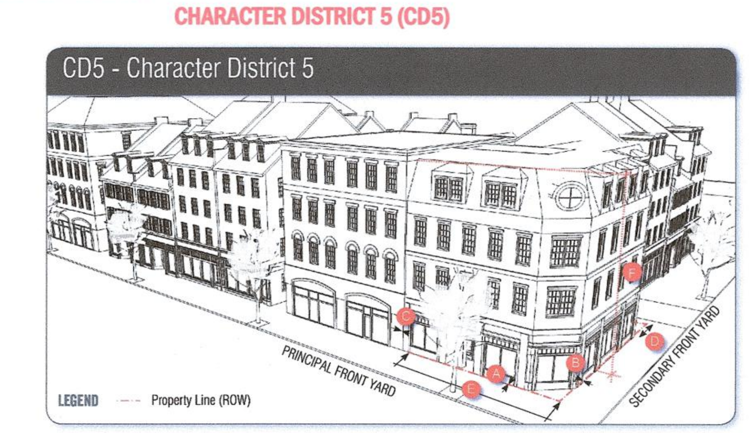

BUILDING PLACEMENT – PRINCIPAL BUILDING*

Maximum **principal front yard**	5 ft	A
Maximum **secondary front yard**	5 ft	B
Side yard	NR	C
Minimum **rear yard**	Greater of 5 ft **from rear lot line** or 10 ft from center line of alley	D
Minimum **front lot line buildout**	80%	

* Except for items listed under Section 10.5A42.12

BUILDING AND LOT OCCUPATION

Maximum **building block length**	225 ft	E
Maximum **façade** modulation length	100 ft (see Section 10.5A43.20)	
Maximum **entrance spacing**	50 ft	
Maximum **building coverage**	95%	
Maximum **building footprint**	20,000 sf (or as allowed by Section 10.5A43.40)	

Minimum **lot area**	NR
Minimum **lot area** per **dwelling unit**	NR
Minimum **open space**	5%
Maximum **ground floor GFA** per **use**	15,000 sf

BUILDING FORM – PRINCIPAL BUILDING

Building height	See Map 10.5A21.B & Section 10.5A43.30	F
Maximum finished floor surface of **ground floor** above **sidewalk** grade	36"	
Minimum **ground story height**	12 ft	
Minimum second **story height**	10 ft	
Façade glazing: **Shopfront façade**	70% min.	
Other **façade** types	20% min. to 50% max.	
Roof type	flat, gable, hip, gambrel, **mansard**	
Roof pitch, if any: Gable	6:12 min. to 12:12 max	
Hip	3:12 min.	
Mansard/gambrel	6:12 min. to 30:12 max.	

No.	DATE	DESCRIPTION	BY	CHK.
2	11/5/24	SITE LAYOUT AND IMPERVIOUS TABLE	EDS	JRC
0	7/31/24	ISSUED FOR COMMENT	SJR	JRC

DRAWING ISSUE STATUS

SITE PLAN

HALEY WARD
ENGINEERING | ENVIRONMENTAL | SURVEYING
200 Griffin Rd. Unit 14
Portsmouth, New Hampshire 03801
603.430.9282
WWW.HALEYWARD.COM

PROJECT

APPLICANT: ONE MARKET SQUARE, LLC
1 & 15 CONGRESS STREET PORTSMOUTH, N.H.

TITLE

PROJECT SITE ZONING

STATE OF NEW HAMPSHIRE LICENSED LAND SURVEYOR No. 738 JOHN R. CHAGNON SIGNATURE

DATE	SCALE	
JULY 2024	1" = 40'	
DRAWN BY: SJR	DESIGNED BY: JRC	CHECKED BY: JRC
PROJECT No.: 5010156.01	FIELD BOOK & PAGE: FB 309 PG 54	
SHEET No.: C102	REV.: 2	

P:\NH\5010156-McNabb_Properties\3406-Congress St., Portsmouth-JRC\2024 Site Plan\Plans & Specs\Site\Current\3406 Site Concept 2024.dwg, 11/18/2024 2:07:34 PM, Canon TX-3000 - Direct

SITE PLAN NOTES:

1) ALL CONDITIONS ON THIS PLAN SHALL REMAIN IN EFFECT IN PERPETUITY PURSUANT TO THE REQUIREMENTS OF THE SITE PLAN REVIEW REGULATIONS.

2) THIS SITE PLAN SHALL BE RECORDED IN THE ROCKINGHAM COUNTY REGISTRY OF DEEDS

3) ALL IMPROVEMENTS SHOWN ON THIS SITE PLAN SHALL BE CONSTRUCTED AND MAINTAINED IN ACCORDANCE WITH THE PLAN BY THE PROPERTY OWNER AND ALL FUTURE PROPERTY OWNERS. NO CHANGES SHALL BE MADE TO THIS SITE PLAN WITHOUT THE EXPRESS APPROVAL OF THE PORTSMOUTH PLANNING DIRECTOR.

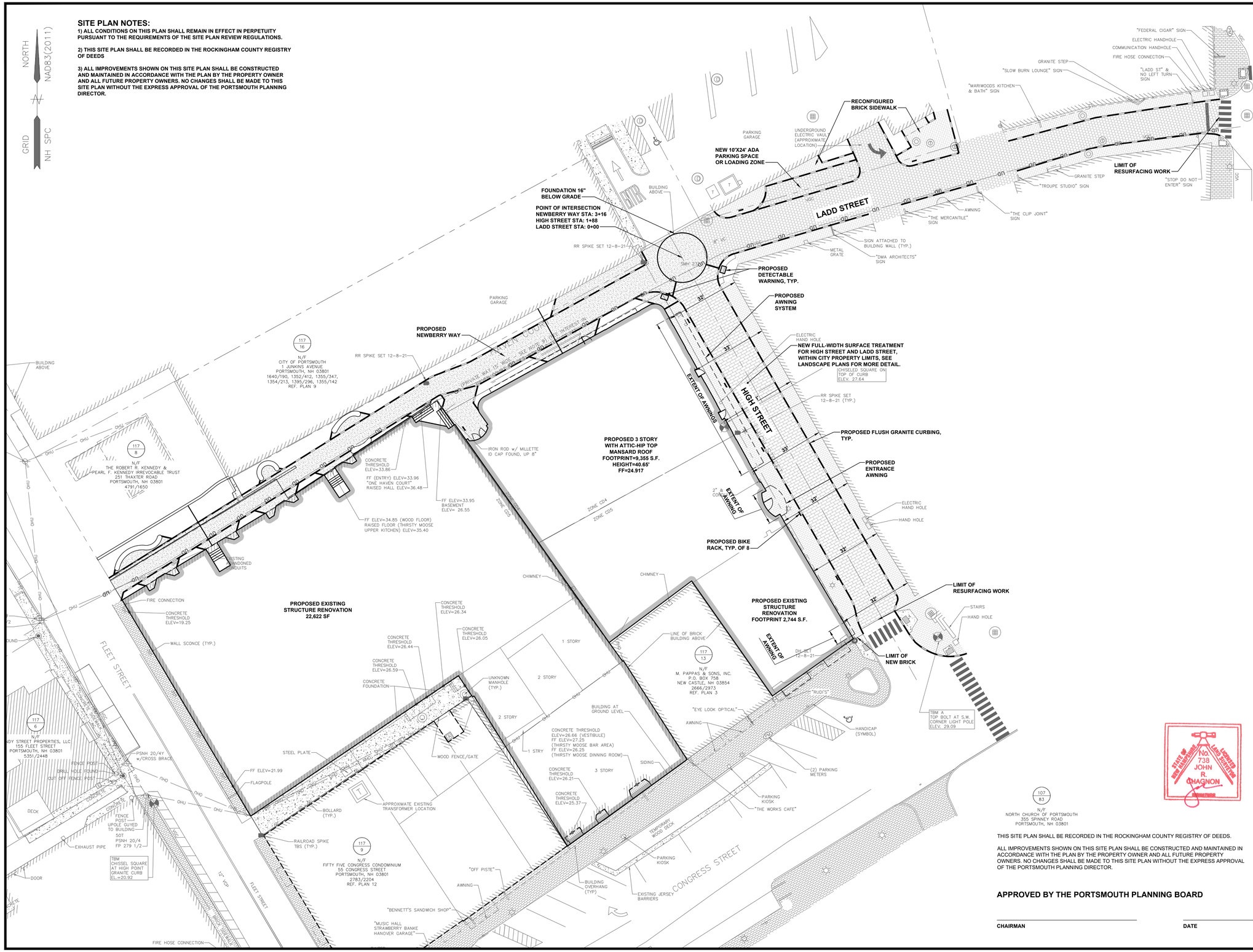

THIS SITE PLAN SHALL BE RECORDED IN THE ROCKINGHAM COUNTY REGISTRY OF DEEDS.

ALL IMPROVEMENTS SHOWN ON THIS SITE PLAN SHALL BE CONSTRUCTED AND MAINTAINED IN ACCORDANCE WITH THE PLAN BY THE PROPERTY OWNER AND ALL FUTURE PROPERTY OWNERS. NO CHANGES SHALL BE MADE TO THIS SITE PLAN WITHOUT THE EXPRESS APPROVAL OF THE PORTSMOUTH PLANNING DIRECTOR.

APPROVED BY THE PORTSMOUTH PLANNING BOARD

CHAIRMAN _____ DATE _____

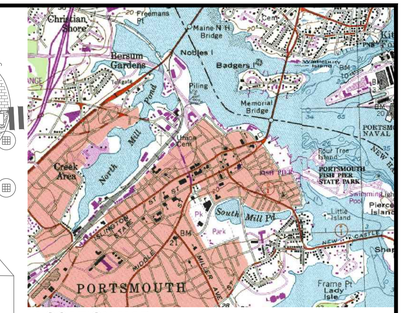

LOCATION MAP:

SCALE: 1"=2000'

USGS QUADRANGLE: PORTSMOUTH
MAPTECH® USGS TOPOGRAPHIC SERIES™,
©MAPTECH®, INC. 978-933-3000
WWW.MAPTECH.COM/TOPO

NOTES:

1) PARCELS ARE SHOWN ON THE CITY OF PORTSMOUTH ASSESSORS MAP 117 AS LOTS 14 AND 15.

2) OWNER OF RECORD & APPLICANT:
ONE MARKET SQUARE, LLC
3 PLEASANT STREET, SUITE 400
PORTSMOUTH, NH 03801
6363/31 PARCEL 1 & PARCEL 2

3) PARCEL IS LOCATED IN THE CHARACTER DISTRICT 4 AND CHARACTER DISTRICT 5. SEE ZONING PLAN.

4) DIMENSIONAL REQUIREMENTS: SEE PORTSMOUTH ORDINANCE FOR REQUIREMENTS.

5) LOT AREAS:

MAP 117 LOT 14	MAP 117 LOT 15	MAP 117 LOT 12
7,266 S.F.	8,840 S.F.	23708 SF
0.1668 ACRES	0.2029 ACRES	0.5443 ACRES

COMBINED LOT AREA:
39,814 S.F.
0.914 ACRES

6) PARCELS ARE NOT IN A SPECIAL FLOOD HAZARD AREA AS SHOWN ON FIRM PANEL 33015C0259F, EFFECTIVE JANUARY 29, 2021

7) THE PURPOSE OF THIS PLAN IS TO SHOW THE PROPOSED DEVELOPMENT ON TAX MAP 117, LOTS 14 AND 15 IN PORTSMOUTH, NH.

8) VERTICAL DATUM IS NAVD88. BASIS OF VERTICAL DATUM IS REDUNDANT RTN GNSS OBS.

9) HAVEN COURT IS A PRIVATE WAY 15 FEET WIDE. ALL RIGHTS, TITLE AND INTEREST UNTO SAID HAVEN COURT WERE CONVEYED WITH ASSESSOR'S MAP 117 LOT 15, AS DESCRIBED IN RCRD 983/179, SUBJECT TO RIGHTS OF OTHERS (OTHERS NOT DEFINED ON THIS PLAN).

PLAN REFERENCE:

STANDARD BOUNDARY SURVEY, TAX MAP 117, LOTS 14 & 15, FOR PETER H. JARVIS & SONS, LLC. 1 CONGRESS STREET & HIGH STREET, CITY OF PORTSMOUTH, COUNTY OF ROCKINGHAM, STATE OF NEW HAMPSHIRE. PREPARED BY AMBIT ENGINEERING, INC. DATED NOVEMBER 2021, ISSUED FOR RECORDING 12/8/21. R.C.R.D. PLAN D-43095.

GRAPHIC SCALE

20 0 10 20 40 60

(IN FEET)
1 inch = 20 ft.

REV.	DATE	DESCRIPTION	BY	CHK.
2	2024.11.18	ISSUED FOR SITE PLAN REVIEW	PJM	JRC
1	2024.11.05	ISSUED FOR COMMENTS	PJM	JRC

DRAWING ISSUE STATUS

PERMIT PLANS

HALEY WARD
ENGINEERING | ENVIRONMENTAL | SURVEYING
200 Griffin Rd. Unit 14
Portsmouth, New Hampshire 03801
603.430.9282
WWW.HALEYWARD.COM

PROJECT

MIXED USE DEVELOPMENT
1-15 CONGRESS STREET PORTSMOUTH, N.H.

TITLE

PROPOSED SITE PLAN

DATE	SCALE
JULY 2024	1" = 20'

DRAWN BY	DESIGNED BY	CHECKED BY
PJM	---	JRC

PROJECT No. 5010156.3406

SHEET No. **C103** REV. No. **2**

STORMWATER STRUCTURE TABLE						
STRUCTURE ID	RIM	INV. IN (N)	INV. IN (S)	INV. IN (E)	INV. IN (W)	INV. OUT
CB1 (REPLACE)	25.26		22.20			22.10
CB4	25.80				22.41	22.31
CB5	26.00		23.50			22.50
CB6	26.86		23.81		23.81	23.71
CB7	26.94					23.98
SD1	25.03					18.84
SD2	24.42					18.63
SD3	23.13					17.37
SD4	21.85					16.10
SD5	20.58					14.82
SD6	19.31					13.55

PIPE SCHEDULE			
PIPE ID	SIZE/TYPE	LENGTH (FEET)	SLOPE
P1	15" HDPE	32	0.005
P2	15" HDPE	43	0.005
P3	15" HDPE	21	0.005
P4	15" HDPE	10	0.005
P5	15" HDPE	18	0.005
P6	6" HDPE	40	0.005
P7	6" HDPE	40	0.032
P8	6" HDPE	40	0.032
P9	6" HDPE	40	0.032
P10	6" HDPE	40	0.032
P11	6" HDPE	41	0.032

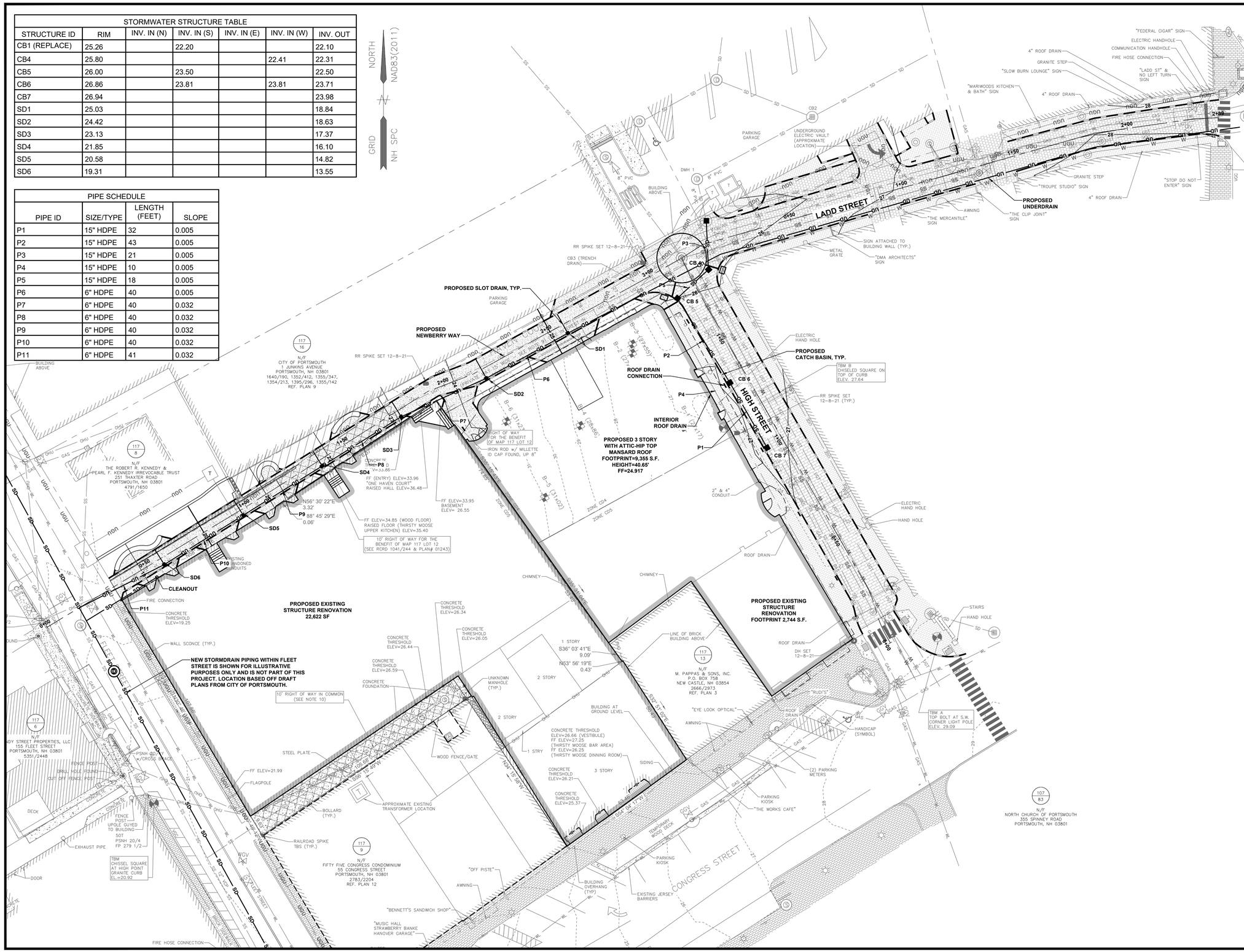

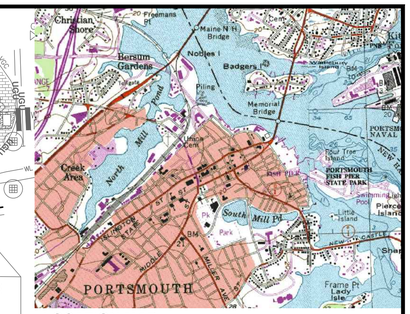

LOCATION MAP: USGS QUADRANGLE PORTSMOUTH MAPTECH® USGS TOPOGRAPHIC SERIES™, ©MAPTECH®, INC. 978-933-3000 WWW.MAPTECH.COM/TOPO

SCALE: 1"=2000'

NOTES:

1) THE CONTRACTOR SHALL NOTIFY DIG SAFE AT 1-888-DIG-SAFE (1-888-344-7233) AT LEAST 72 HOURS PRIOR TO COMMENCING ANY EXCAVATION ON PUBLIC OR PRIVATE PROPERTY WITHIN 100 FEET OF UNDERGROUND UTILITIES. THE EXCAVATOR IS RESPONSIBLE TO MAINTAIN MARKS. DIG SAFE TICKETS EXPIRE IN THIRTY DAYS.

2) UNDERGROUND UTILITY LOCATIONS ARE BASED UPON BEST AVAILABLE EVIDENCE AND ARE NOT FIELD VERIFIED. LOCATING AND PROTECTING ANY ABOVEGROUND OR UNDERGROUND UTILITIES IS THE SOLE RESPONSIBILITY OF THE CONTRACTOR AND/OR THE OWNER. UTILITY CONFLICTS SHOULD BE REPORTED AT ONCE TO THE DESIGN ENGINEER.

3) CONTRACTOR SHALL INSTALL AND MAINTAIN EROSION CONTROL MEASURES IN ACCORDANCE WITH THE "NEW HAMPSHIRE STORMWATER MANUAL, VOLUME 3, EROSION AND SEDIMENT CONTROLS DURING CONSTRUCTION. (NHDES DECEMBER 2008).

4) OWNER/DEVELOPER SHALL MAINTAIN & CLEAR SNOW FROM PRIVATE ROADWAYS.

GRAPHIC SCALE

20 0 10 20 40 60

(IN FEET)
1 inch = 20 ft.

REV.	DATE	DESCRIPTION	BY	CHK.
2	2024.11.18	ISSUED FOR SITE PLAN REVIEW	PJM	JRC
1	2024.11.05	ISSUED FOR COMMENTS	PJM	JRC

DRAWING ISSUE STATUS

PERMIT PLANS

HALEY WARD
ENGINEERING | ENVIRONMENTAL | SURVEYING
200 Griffin Rd. Unit 14
Portsmouth, New Hampshire 03801
603.430.9282
WWW.HALEYWARD.COM

PROJECT

MIXED USE DEVELOPMENT
1-15 CONGRESS STREET PORTSMOUTH, N.H.

TITLE

GRADING AND DRAINAGE PLAN

STATE OF NEW HAMPSHIRE JOHN R. CHAGNON No. 9651 LICENSED PROFESSIONAL ENGINEER

DATE	SCALE
JULY 2024	1" = 20'

DRAWN BY	DESIGNED BY	CHECKED BY
PJM	---	JRC

PROJECT No. 5010156.3406

SHEET No. **C104** REV. No. **2**

UTILITY NOTES:

1. SEE EXISTING CONDITIONS PLAN FOR BENCHMARK INFORMATION.
2. COORDINATE ALL UTILITY WORK WITH APPROPRIATE UTILITY.
3. SEE GRADING AND DRAINAGE PLAN FOR PROPOSED GRADING AND EROSION CONTROL MEASURES.
4. ALL WATER MAIN INSTALLATIONS SHALL BE CLASS 52, POLYWRAPPED, CEMENT LINED DUCTILE IRON PIPE.
5. ALL WATERMAIN INSTALLATIONS SHALL BE PRESSURE TESTED AND CHLORINATED AFTER CONSTRUCTION AND BEFORE ACTIVATING THE SYSTEM. CONTRACTOR SHALL COORDINATE WITH THE CITY OF PORTSMOUTH.
6. ALL SEWER PIPE SHALL BE PVC SDR 35 UNLESS OTHERWISE STATED.
7. ALL WORK WITHIN CITY R.O.W. SHALL BE COORDINATED WITH CITY OF PORTSMOUTH
8. CONTRACTOR SHALL MAINTAIN UTILITY SERVICES TO ABUTTING PROPERTIES THROUGHOUT CONSTRUCTION.
9. ANY CONNECTION TO EXISTING WATERMAIN SHALL BE CONSTRUCTED BY THE CITY OF PORTSMOUTH.
10. EXISTING UTILITIES TO BE REMOVED SHALL BE CAPPED AT THE MAIN AND MEET THE DEPARTMENT OF PUBLIC WORKS STANDARDS FOR CAPPING OF WATER AND SEWER SERVICES.
11. ALL ELECTRICAL MATERIAL WORKMANSHIP SHALL CONFORM TO THE NATIONAL ELECTRIC CODE, LATEST EDITION, AND ALL APPLICABLE STATE AND LOCAL CODES.
12. THE EXACT LOCATION OF NEW UTILITY SERVICES AND CONNECTIONS SHALL BE COORDINATED WITH BUILDING DRAWINGS AND UTILITY COMPANIES.
13. ADJUST ALL MANHOLES, CATCH BASINS, CURB BOXES, ETC. WITHIN LIMITS OF WORK TO FINISH GRADE.
14. ALL UNDERGROUND CONDUITS SHALL HAVE NYLON PULL ROPES TO FACILITATE PULLING CABLES.
15. THE CONTRACTOR SHALL OBTAIN, PAY FOR, AND COMPLY WITH ALL REQUIRED PERMITS, ARRANGE FOR ALL INSPECTIONS, AND SUBMIT COPIES OF ACCEPTANCE CERTIFICATED TO THE OWNER PRIOR TO THE COMPLETION OF PROJECT.
16. THE CONTRACTOR SHALL PROVIDE AND INSTALL ALL MANHOLES, BOXES, FITTINGS, CONNECTORS, COVER PLATES AND OTHER MISCELLANEOUS ITEMS NOT NECESSARILY DETAILED IN THESE DRAWING TO RENDER INSTALLATION OF UTILITIES COMPLETE AND OPERATIONAL.
17. CONTRACTOR SHALL PROVIDE EXCAVATION, BEDDING, BACKFILL AND COMPACTION FOR NATURAL GAS SERVICES.
18. A 10-FOOT MINIMUM EDGE TO EDGE HORIZONTAL SEPARATION SHALL BE PROVIDED BETWEEN ALL WATER AND SANITARY SEWER LINES. AN 18-INCH MINIMUM OUTSIDE TO OUTSIDE VERTICAL SEPARATION SHALL BE PROVIDED AT ALL WATER/SANITARY SEWER CROSSINGS WATER ABOVE SEWER.
19. SAWCUT AND REMOVE PAVEMENT AND CONSTRUCT PAVEMENT TRENCH PATCH FOR ALL PROPOSED UTILITIES LOCATED IN EXISTING PAVEMENT AREAS TO REMAIN.
20. GATE VALVES, FITTINGS, ETC. SHALL MEET THE REQUIREMENTS OF THE CITY OF PORTSMOUTH.
21. COORDINATE TESTING OF SEWER CONSTRUCTION WITH THE CITY OF PORTSMOUTH.
22. ALL SEWER PIPES WITH LESS THAN 6' COVER SHALL BE INSULATED.
23. CONTRACTOR SHALL COORDINATE ALL ELECTRIC WORK INCLUDING BUT NOT LIMITED TO: CONDUIT CONSTRUCTION, MANHOLE CONSTRUCTION, UTILITY POLE CONSTRUCTION, OVERHEAD WIRE RELOCATION, AND TRANSFORMER CONSTRUCTION WITH POWER COMPANY.
24. CONTRACTOR SHALL PHASE UTILITY CONSTRUCTION, PARTICULARLY WATER MAIN AND GAS MAIN CONSTRUCTION AS TO MAINTAIN CONTINUOUS SERVICE TO ABUTTING PROPERTIES. CONTRACTOR SHALL COORDINATE TEMPORARY SERVICES TO ABUTTERS WITH UTILITY COMPANY AND AFFECTED ABUTTER.

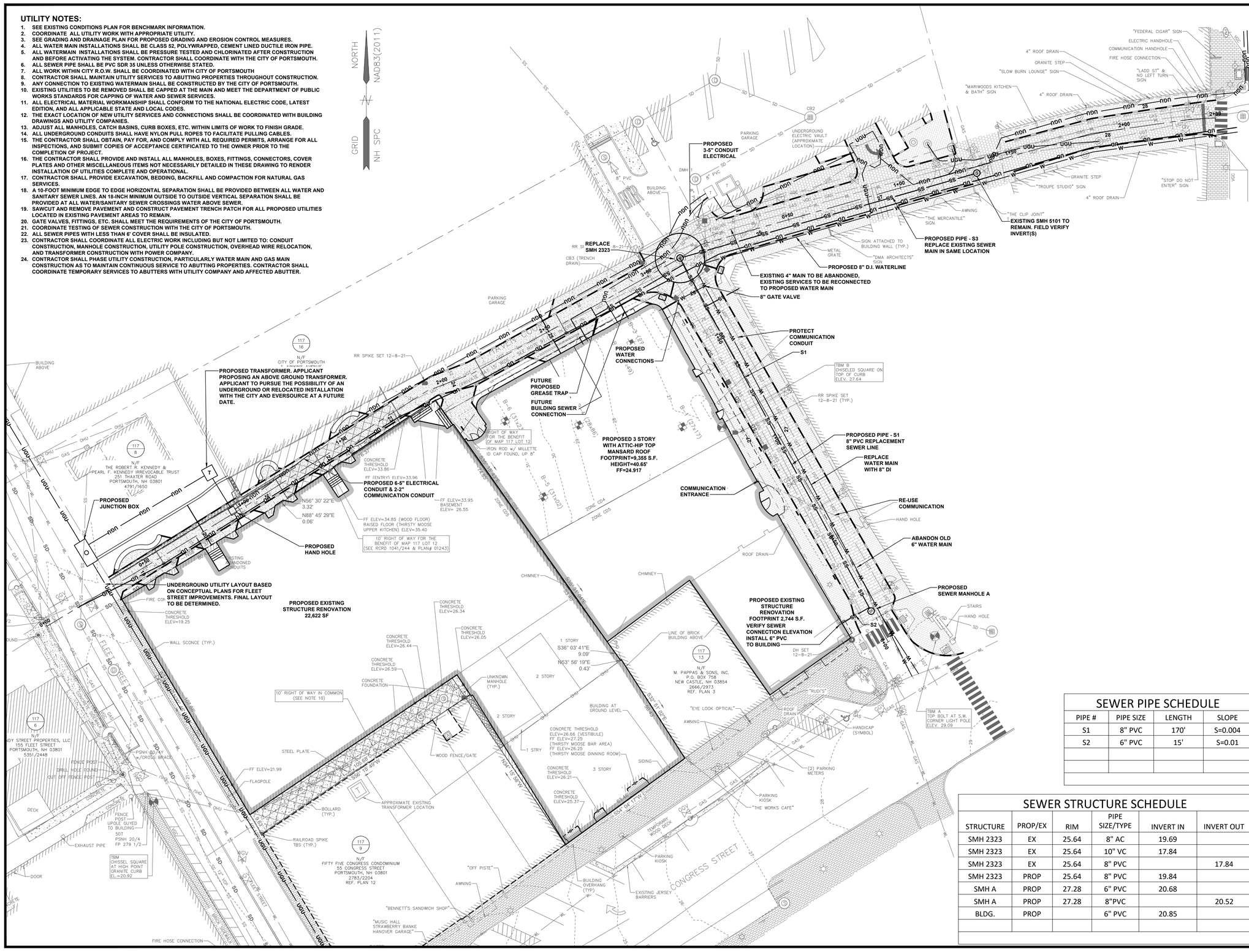

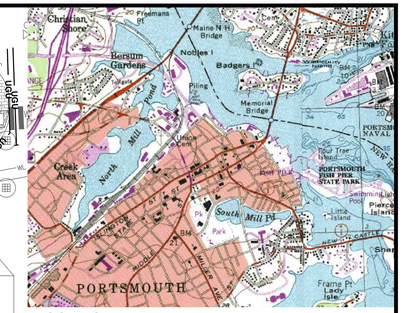

LOCATION MAP: USGS QUADRANGLE: PORTSMOUTH
MAPTECH® USGS TOPOGRAPHIC SERIES™,
©MAPTECH®, INC. 978-933-3000
WWW.MAPTECH.COM/TOPO
SCALE: 1"=2000'

NOTES:

1) THE CONTRACTOR SHALL NOTIFY DIG SAFE AT 1-888-DIG-SAFE (1-888-344-7233) AT LEAST 72 HOURS PRIOR TO COMMENCING ANY EXCAVATION ON PUBLIC OR PRIVATE PROPERTY WITHIN 100 FEET OF UNDERGROUND UTILITIES. THE EXCAVATOR IS RESPONSIBLE TO MAINTAIN MARKS. DIG SAFE TICKETS EXPIRE IN THIRTY DAYS.

2) UNDERGROUND UTILITY LOCATIONS ARE BASED UPON BEST AVAILABLE EVIDENCE AND ARE NOT FIELD VERIFIED. LOCATING AND PROTECTING ANY ABOVEGROUND OR UNDERGROUND UTILITIES IS THE SOLE RESPONSIBILITY OF THE CONTRACTOR AND/OR THE OWNER. UTILITY CONFLICTS SHOULD BE REPORTED AT ONCE TO THE DESIGN ENGINEER.

3) CONTRACTOR SHALL INSTALL AND MAINTAIN EROSION CONTROL MEASURES IN ACCORDANCE WITH THE "NEW HAMPSHIRE STORMWATER MANUAL, VOLUME 3, EROSION AND SEDIMENT CONTROLS DURING CONSTRUCTION. (NHDES DECEMBER 2008).

4) PROVIDE TEMPORARY WATER AND SEWER SERVICES TO ALL IMPACTED PROPERTIES DURING NEW WATER AND SEWER MAIN INSTALLATION.

5) PROPOSED SEWER FLOW:
TBD

6) APPLICANT, AND AUTHORIZED AGENTS, TO WORK WITH THE CITY OF PORTSMOUTH AND UTILITY PROVIDERS TO CONSTRUCT NEW, PERMANENT SERVICE CONNECTION TO PROPOSED WATER, SEWER, STORMDRAIN, POWER , AND COMMUNICATIONS PIPING FOR ALL IMPACTED PROPERTIES ON HIGH STREET, LADD STREET AND NEWBERRY WAY.

SEWER PIPE SCHEDULE

PIPE #	PIPE SIZE	LENGTH	SLOPE
S1	8" PVC	170'	S=0.004
S2	6" PVC	15'	S=0.01

SEWER STRUCTURE SCHEDULE

STRUCTURE	PROP/EX	RIM	PIPE SIZE/TYPE	INVERT IN	INVERT OUT
SMH 2323	EX	25.64	8" AC	19.69	
SMH 2323	EX	25.64	10" VC	17.84	
SMH 2323	EX	25.64	8" PVC		17.84
SMH 2323	PROP	25.64	8" PVC	19.84	
SMH A	PROP	27.28	6" PVC	20.68	
SMH A	PROP	27.28	8"PVC		20.52
BLDG.	PROP		6" PVC	20.85	

GRAPHIC SCALE

20 0 10 20 40 60

(IN FEET)
1 inch = 20 ft.

REV.	DATE	DESCRIPTION	BY	CHK.
2	2024.11.18	ISSUED FOR SITE PLAN REVIEW	PJM	JRC
1	2024.11.05	ISSUED FOR COMMENTS	PJM	JRC

DRAWING ISSUE STATUS

PERMIT PLANS

HALEY WARD
ENGINEERING | ENVIRONMENTAL | SURVEYING
200 Griffin Rd. Unit 14
Portsmouth, New Hampshire 03801
603.430.9282
WWW.HALEYWARD.COM

PROJECT

MIXED USE DEVELOPMENT
1-15 CONGRESS STREET PORTSMOUTH, N.H.

TITLE

PROPOSED UTILITY PLAN

STATE OF NEW HAMPSHIRE JOHN R. CHAGNON No. 9651 LICENSED PROFESSIONAL ENGINEER

DATE	SCALE
JULY 2024	1" = 20'

DRAWN BY	DESIGNED BY	CHECKED BY
PJM	---	JRC

PROJECT No. 5010156.3406

SHEET No. C105

REV. No. 2

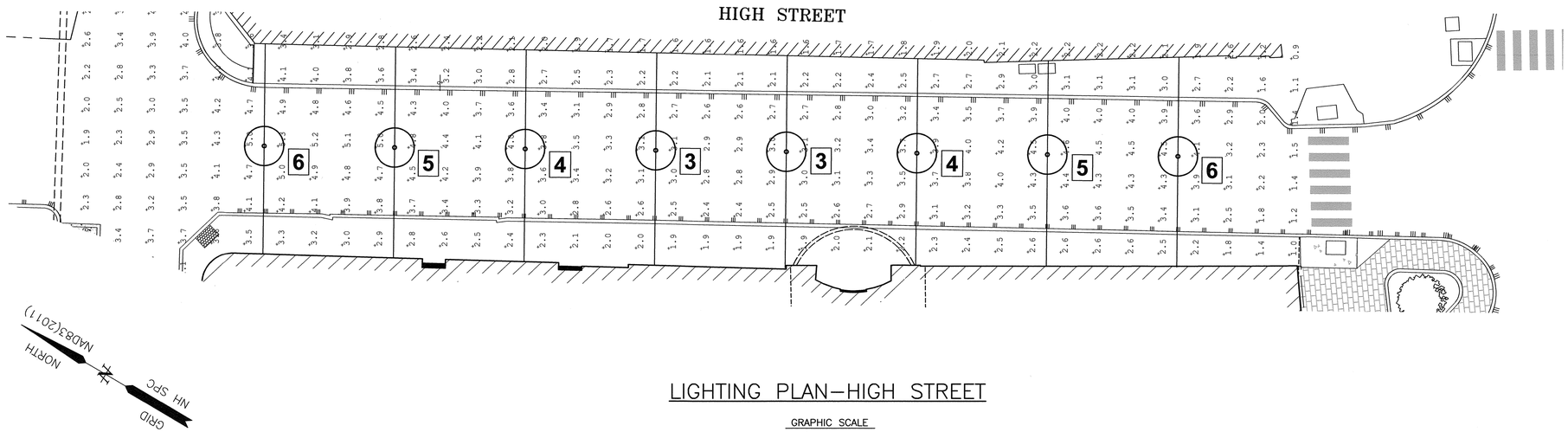

LIGHTING PLAN–HIGH STREET

GRAPHIC SCALE

10 5 0 10 20 30 40 FEET
3 0 5 10 METERS

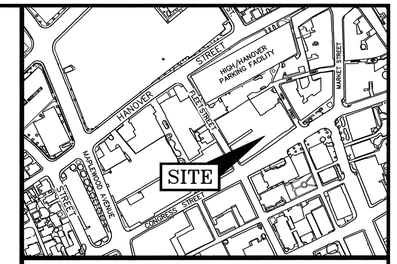

LOCATION MAP 1" = 300'

NOTES:

1) CATENARY LIGHTING DESIGN PROVIDED BY EXPOSURE ESS ON 11/24/24. CONTACT: KEN SWEENEY 603–601–8080.

2) ALL LIGHTS SHALL BE DARK SKY COMPLIANT AND DIRECTED DOWNWARD.

3) LIGHTS SHALL COMPLY WITH ALL LOCAL, STATE, AND FEDERAL REGULATIONS.

4) NUMBERS REPRESENT INITIAL FOOTCANDLE VALUES AT 3 FEET ABOVE GRADE.

5) THIS LIGHTING PATTERN REPRESENTS ILLUMINATION LEVELS CALCULATED FROM LABORATORY DATA TAKEN UNDER CONTROLLED CONDITIONS IN ACCORDANCE WITH ILLUMINATING ENGINEERING SOCIETY APPROVED METHODS. ACTUAL PERFORMANCE OF ANY MANUFACTURER'S LUMINAIRE MAY VARY DUE TO VARIATION IN ELECTRICAL VOLTAGE, TOLERANCE IN LAMPS, AND OTHER VARIABLE FIELD CONDITIONS.

6) BASED ON THE INFORMATION PROVIDED, ALL DIMENSIONS AND LUMINAIRE LOCATIONS SHOWN REPRESENT RECOMMENDED POSITIONS. THE ENGINEER AND/OR ARCHITECT MUST DETERMINE APPLICABILITY OF THE LAYOUT TO EXISTING OR FUTURE FIELD CONDITIONS.

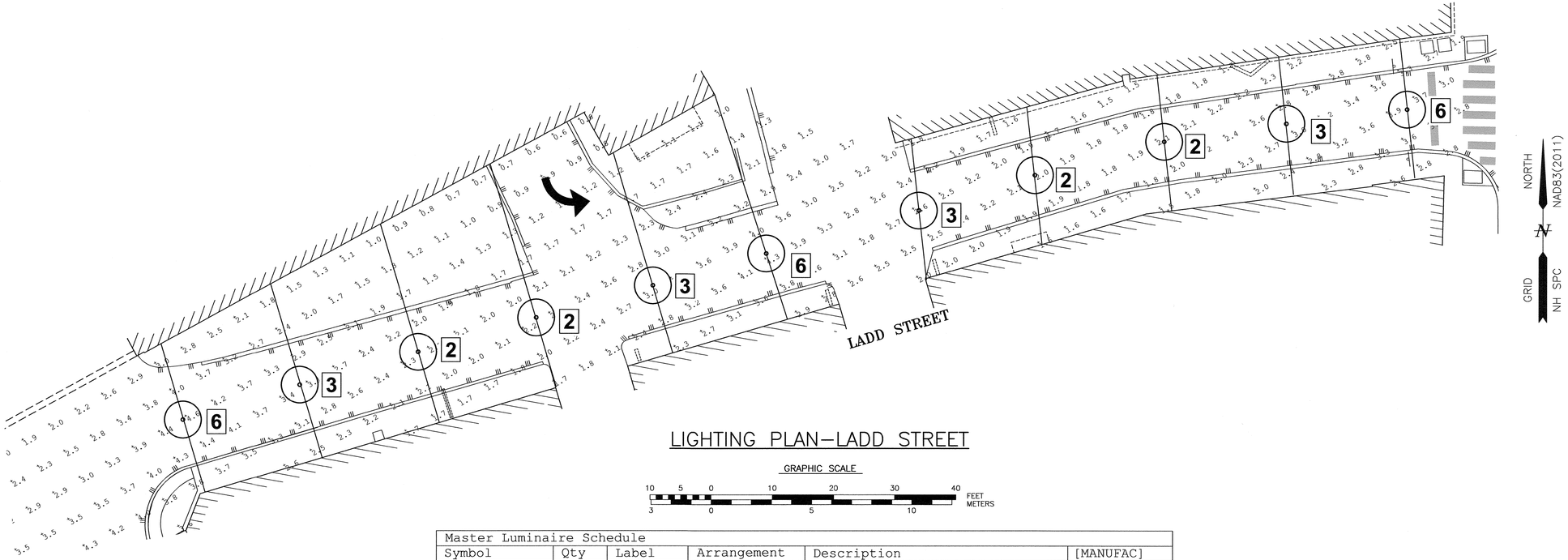

LIGHTING PLAN–LADD STREET

GRAPHIC SCALE

10 5 0 10 20 30 40 FEET
3 0 5 10 METERS

Master Luminaire Schedule					
Symbol	Qty	Label	Arrangement	Description	[MANUFAC]
⊙	4	2	Single	VOLTA-RNG-D-2-L30HO-S(X)-XX-S	Structura
⊙	11	3	Single	VOLTA-RNG-D-3-L30HO-S(X)-XX-S	Structura
⊙	4	4	Single	VOLTA-RNG-D-4-L30HO-S(X)-XX-S	Structura
⊙	4	5	Single	VOLTA-RNG-D-5-L30HO-S(X)-XX-S	Structura
⊙	9	6	Single	VOLTA-RNG-D-6-L30HO-S(X)-XX-S	Structura

No.	DATE	DESCRIPTION	BY	CHK.
0	11/18/24	ISSUED FOR COMMENT	SJR	JRC

DRAWING ISSUE STATUS

SITE PLAN

HALEY WARD
ENGINEERING | ENVIRONMENTAL | SURVEYING
200 Griffin Rd. Unit 14
Portsmouth, New Hampshire 03801
603.430.9282
WWW.HALEYWARD.COM

PROJECT

APPLICANT: ONE MARKET SQUARE, LLC
1 & 15 CONGRESS STREET PORTSMOUTH, N.H.

TITLE

HIGH STREET & LADD STREET LIGHTING PLAN

DATE	SCALE
JULY 2024	1" = 10'

DRAWN BY	DESIGNED BY	CHECKED BY
SJR	JRC	JRC

PROJECT No.	FIELD BOOK & PAGE
5010156.01	FB 309 PG 54

SHEET No.	REV.
C106	0

P:\hh\2010156-McHaab_Properties\405-Congress St-Portsmouth_JRC\2024 Site Plan\01-Deliverables_Archive\Portsmouth Drawings\2010156-405-Lighting Current.1VW.dwg 11/18/2024 11:55:33 AM

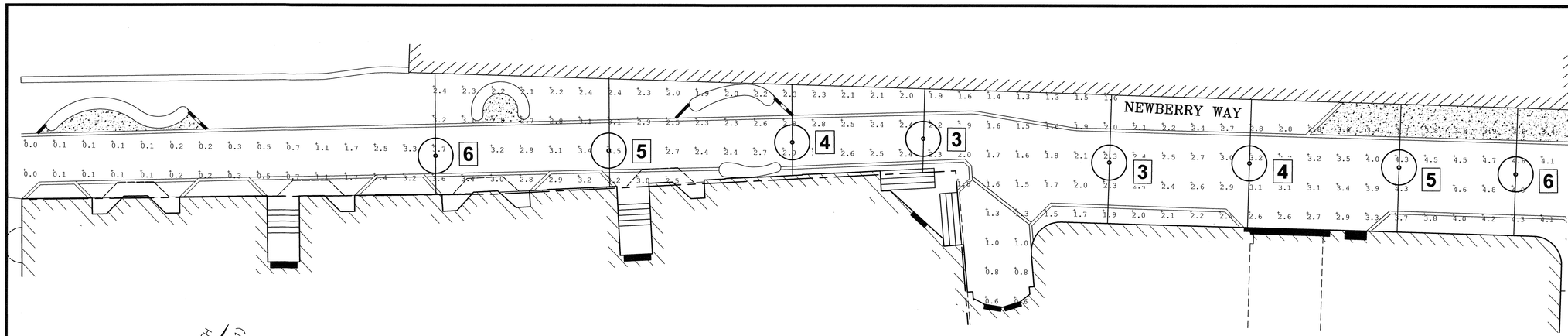

LIGHTING PLAN–NEWBERRY WAY

GRAPHIC SCALE

10 5 0 10 20 30 40 FEET
3 0 5 10 METERS

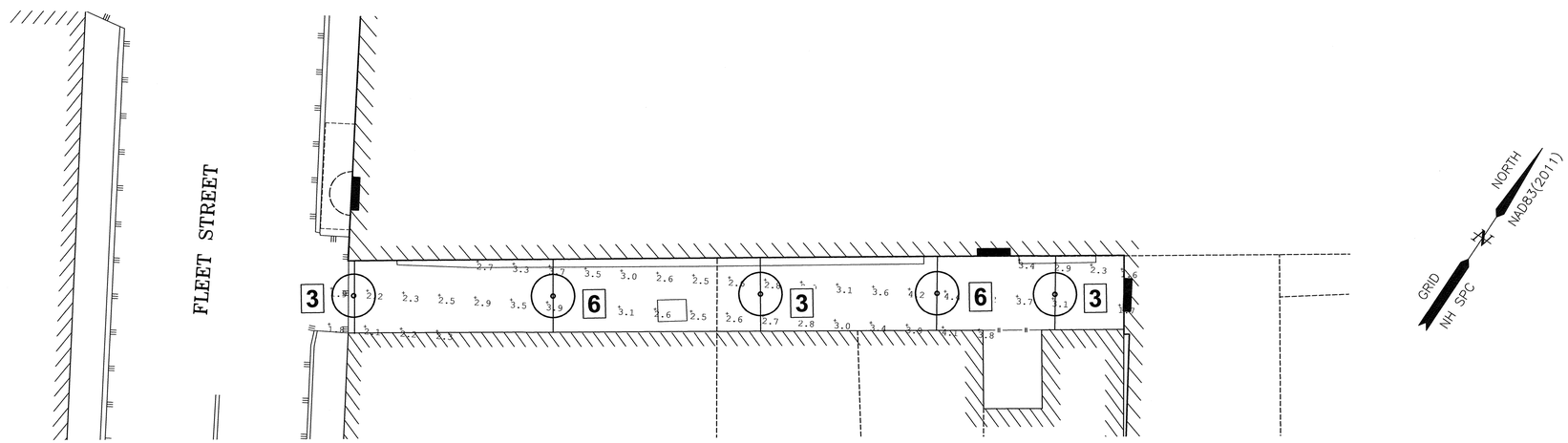

LIGHTING PLAN–FLEET STREET ALLEY

GRAPHIC SCALE

10 5 0 10 20 30 40 FEET
3 0 5 10 METERS

Master Luminaire Schedule					
Symbol	Qty	Label	Arrangement	Description	[MANUFAC]
⊙	4	2	Single	VOLTA-RNG-D-2-L30HO-S(X)-XX-S	Structura
⊙	11	3	Single	VOLTA-RNG-D-3-L30HO-S(X)-XX-S	Structura
⊙	4	4	Single	VOLTA-RNG-D-4-L30HO-S(X)-XX-S	Structura
⊙	4	5	Single	VOLTA-RNG-D-5-L30HO-S(X)-XX-S	Structura
⊙	9	6	Single	VOLTA-RNG-D-6-L30HO-S(X)-XX-S	Structura

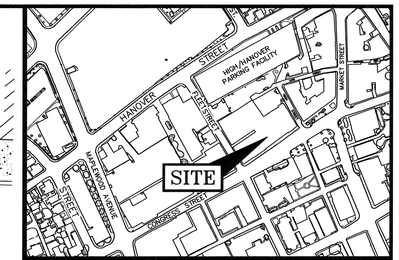

LOCATION MAP 1" = 300'

NOTES:

1) CATENARY LIGHTING DESIGN PROVIDED BY EXPOSURE ESS ON 11/24/24. CONTACT: KEN SWEENEY 603–601–8080.

2) ALL LIGHTS SHALL BE DARK SKY COMPLIANT AND DIRECTED DOWNWARD.

3) LIGHTS SHALL COMPLY WITH ALL LOCAL, STATE, AND FEDERAL REGULATIONS.

4) NUMBERS REPRESENT INITIAL FOOTCANDLE VALUES AT 3 FEET ABOVE GRADE.

5) THIS LIGHTING PATTERN REPRESENTS ILLUMINATION LEVELS CALCULATED FROM LABORATORY DATA TAKEN UNDER CONTROLLED CONDITIONS IN ACCORDANCE WITH ILLUMINATING ENGINEERING SOCIETY APPROVED METHODS. ACTUAL PERFORMANCE OF ANY MANUFACTURER'S LUMINAIRE MAY VARY DUE TO VARIATION IN ELECTRICAL VOLTAGE, TOLERANCE IN LAMPS, AND OTHER VARIABLE FIELD CONDITIONS.

6) BASED ON THE INFORMATION PROVIDED, ALL DIMENSIONS AND LUMINAIRE LOCATIONS SHOWN REPRESENT RECOMMENDED POSITIONS. THE ENGINEER AND/OR ARCHITECT MUST DETERMINE APPLICABILITY OF THE LAYOUT TO EXISTING OR FUTURE FIELD CONDITIONS.

No.	DATE	DESCRIPTION	BY	CHK.
0	11/18/24	ISSUED FOR COMMENT	SJR	JRC

DRAWING ISSUE STATUS

SITE PLAN

HALEY WARD
ENGINEERING | ENVIRONMENTAL | SURVEYING
200 Griffin Rd. Unit 14
Portsmouth, New Hampshire 03801
603.430.9282
WWW.HALEYWARD.COM

PROJECT

APPLICANT: ONE MARKET SQUARE, LLC
1 & 15 CONGRESS STREET PORTSMOUTH, N.H.

TITLE

NEWBERRY WAY & FLEET STREET ALLEY LIGHTING PLAN

DATE	SCALE
JULY 2024	1" = 10'

DRAWN BY	DESIGNED BY	CHECKED BY
SJR	JRC	JRC

PROJECT No.	FIELD BOOK & PAGE
5010156.01	FB 309 PG 54

SHEET No.	REV.
C107	0

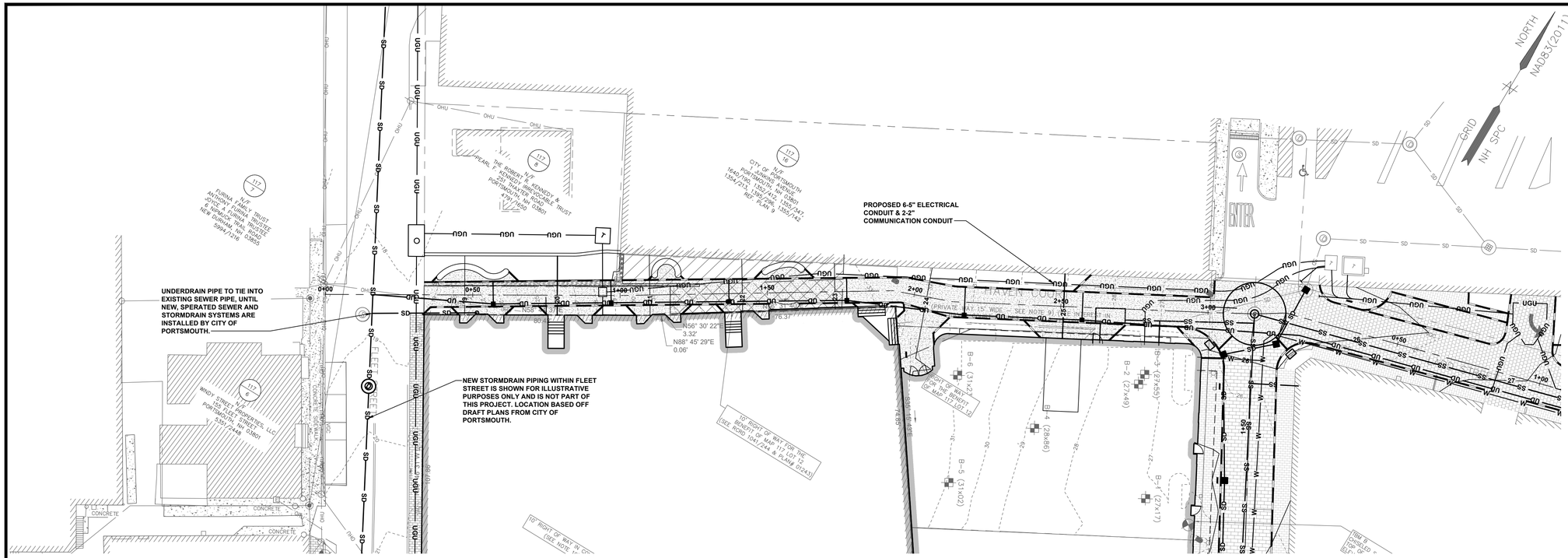

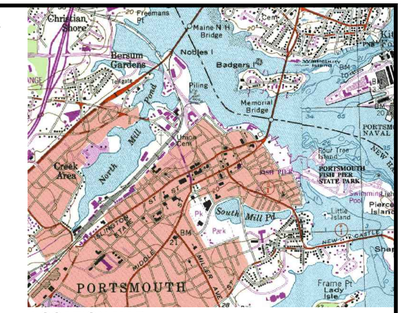

LOCATION MAP:
SCALE: 1"=2000'

USGS QUADRANGLE: PORTSMOUTH
MAPTECH® USGS TOPOGRAPHIC SERIES™,
©MAPTECH®, INC. 978-933-3000
WWW.MAPTECH.COM/TOPO

NOTES:

1) THE CONTRACTOR SHALL NOTIFY DIG SAFE AT 1-888-DIG-SAFE (1-888-344-7233) AT LEAST 72 HOURS PRIOR TO COMMENCING ANY EXCAVATION ON PUBLIC OR PRIVATE PROPERTY WITHIN 100 FEET OF UNDERGROUND UTILITIES. THE EXCAVATOR IS RESPONSIBLE TO MAINTAIN MARKS. DIG SAFE TICKETS EXPIRE IN THIRTY DAYS.

2) UNDERGROUND UTILITY LOCATIONS ARE BASED UPON BEST AVAILABLE EVIDENCE AND ARE NOT FIELD VERIFIED. LOCATING AND PROTECTING ANY ABOVEGROUND OR UNDERGROUND UTILITIES IS THE SOLE RESPONSIBILITY OF THE CONTRACTOR AND/OR THE OWNER. UTILITY CONFLICTS SHOULD BE REPORTED AT ONCE TO THE DESIGN ENGINEER.

3) CONTRACTOR SHALL INSTALL AND MAINTAIN EROSION CONTROL MEASURES IN ACCORDANCE WITH THE "NEW HAMPSHIRE STORMWATER MANUAL, VOLUME 3, EROSION AND SEDIMENT CONTROLS DURING CONSTRUCTION. (NHDES DECEMBER 2008).

PROFILE NOTES:

1) EXISTING & PROPOSED GRADES SHOWN DEPICT CONDITIONS ALONG THE PROPOSED ALIGNMENT.

2) UNDERGROUND UTILITIES SHOWN IN PROFILE ARE PROJECTED TO THE ALIGNMENT AND MAY NOT ALIGN WITH THE PROPOSED GRADES SHOWN. FOR ADDITIONAL INFORMATION & DETAILED GRADING, REFER TO THE PLAN VIEW.

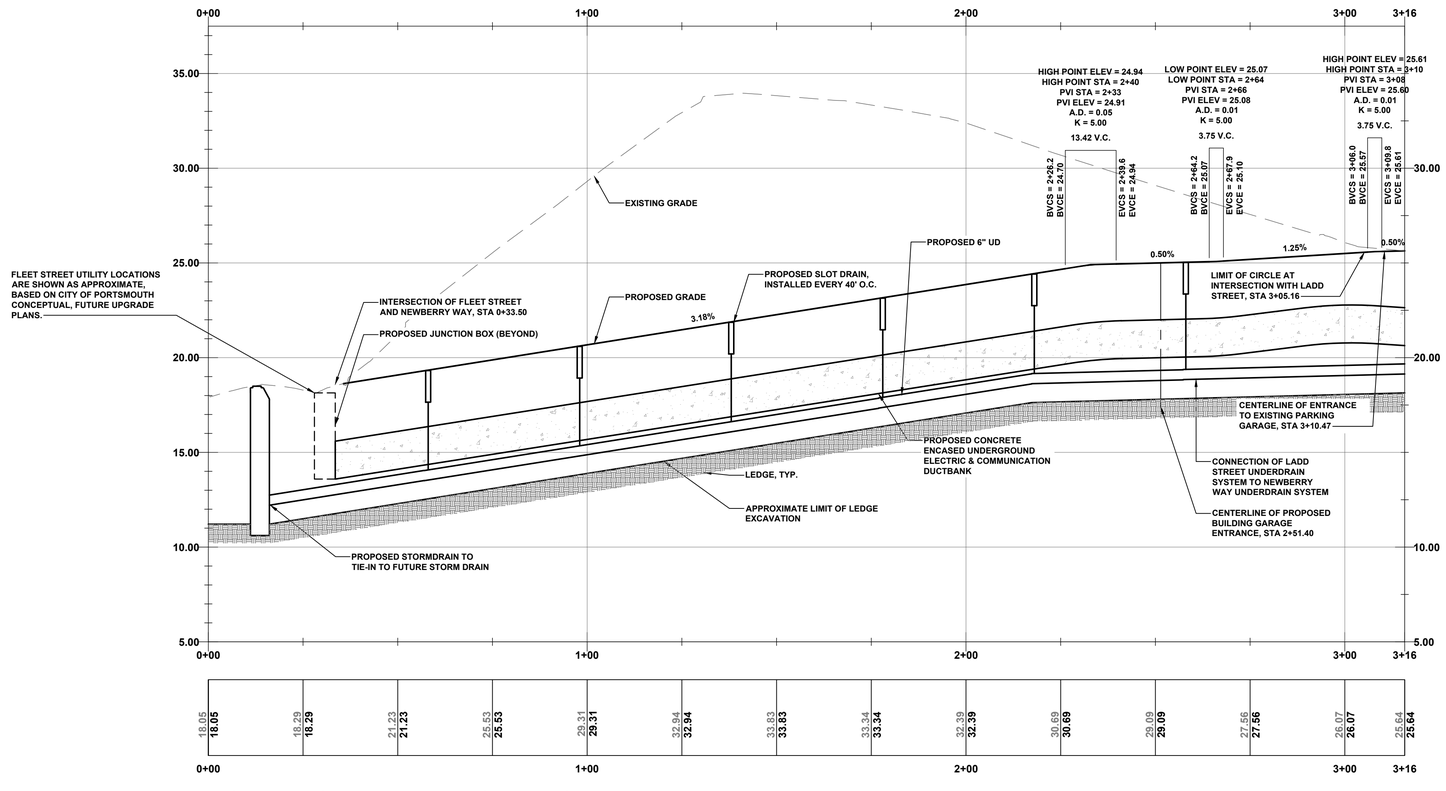

PROFILE VIEW OF NEWBERRY WAY - STA 0+00 TO 3+16
SCALE: H: 1"=20' / V: 1"=4'

GRAPHIC SCALE

20 0 10 20 40 60

(IN FEET)
1 inch = 20 ft.

REV.	DATE	DESCRIPTION	BY	CHK.
2	2024.11.18	ISSUED FOR SITE PLAN REVIEW	PJM	JRC
1	2024.11.05	ISSUED FOR COMMENTS	PJM	JRC

DRAWING ISSUE STATUS

PERMIT PLANS

HALEY WARD
ENGINEERING | ENVIRONMENTAL | SURVEYING
200 Griffin Rd. Unit 14
Portsmouth, New Hampshire 03801
603.430.9282
WWW.HALEYWARD.COM

PROJECT

MIXED USE DEVELOPMENT
1-15 CONGRESS STREET PORTSMOUTH, N.H.

TITLE

PROPOSED PLAN & PROFILE
NEWBERRY WAY

STATE OF NEW HAMPSHIRE
JOHN R. CHAGNON
No. 9651
LICENSED
PROFESSIONAL ENGINEER

DATE	SCALE
JULY 2024	1" = 20'

DRAWN BY	DESIGNED BY	CHECKED BY
PJM	---	JRC

PROJECT No. 5010156.3406

SHEET No. **C201**

REV. No. **2**

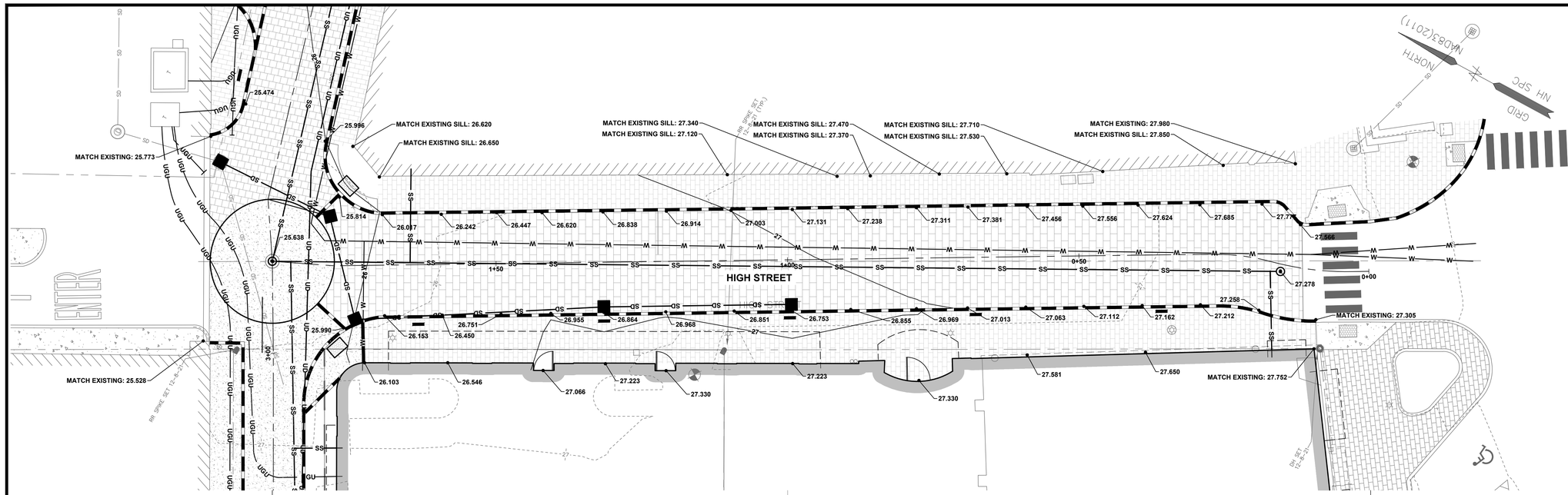

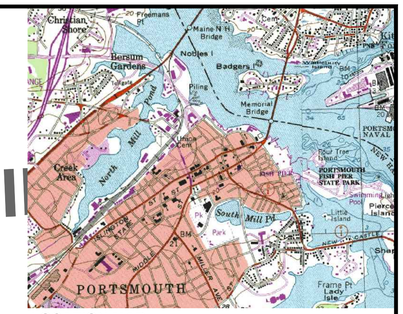

LOCATION MAP
SCALE: 1"=2000'

USGS QUADRANGLE: PORTSMOUTH
MAPTECH® USGS TOPOGRAPHIC SERIES™,
©MAPTECH®, INC. 978-933-3000
WWW.MAPTECH.COM/TOPO

NOTES:

1) THE CONTRACTOR SHALL NOTIFY DIG SAFE AT 1-888-DIG-SAFE (1-888-344-7233) AT LEAST 72 HOURS PRIOR TO COMMENCING ANY EXCAVATION ON PUBLIC OR PRIVATE PROPERTY WITHIN 100 FEET OF UNDERGROUND UTILITIES. THE EXCAVATOR IS RESPONSIBLE TO MAINTAIN MARKS. DIG SAFE TICKETS EXPIRE IN THIRTY DAYS.

2) UNDERGROUND UTILITY LOCATIONS ARE BASED UPON BEST AVAILABLE EVIDENCE AND ARE NOT FIELD VERIFIED. LOCATING AND PROTECTING ANY ABOVEGROUND OR UNDERGROUND UTILITIES IS THE SOLE RESPONSIBILITY OF THE CONTRACTOR AND/OR THE OWNER. UTILITY CONFLICTS SHOULD BE REPORTED AT ONCE TO THE DESIGN ENGINEER.

3) CONTRACTOR SHALL INSTALL AND MAINTAIN EROSION CONTROL MEASURES IN ACCORDANCE WITH THE "NEW HAMPSHIRE STORMWATER MANUAL, VOLUME 3, EROSION AND SEDIMENT CONTROLS DURING CONSTRUCTION. (NHDES DECEMBER 2008).

PROFILE NOTES:

1) EXISTING & PROPOSED GRADES SHOWN DEPICT CONDITIONS ALONG THE PROPOSED ALIGNMENT.

2) UNDERGROUND UTILITIES SHOWN IN PROFILE ARE PROJECTED TO THE ALIGNMENT AND MAY NOT ALIGN WITH THE PROPOSED GRADES SHOWN. FOR ADDITIONAL INFORMATION & DETAILED GRADING, REFER TO THE PLAN VIEW.

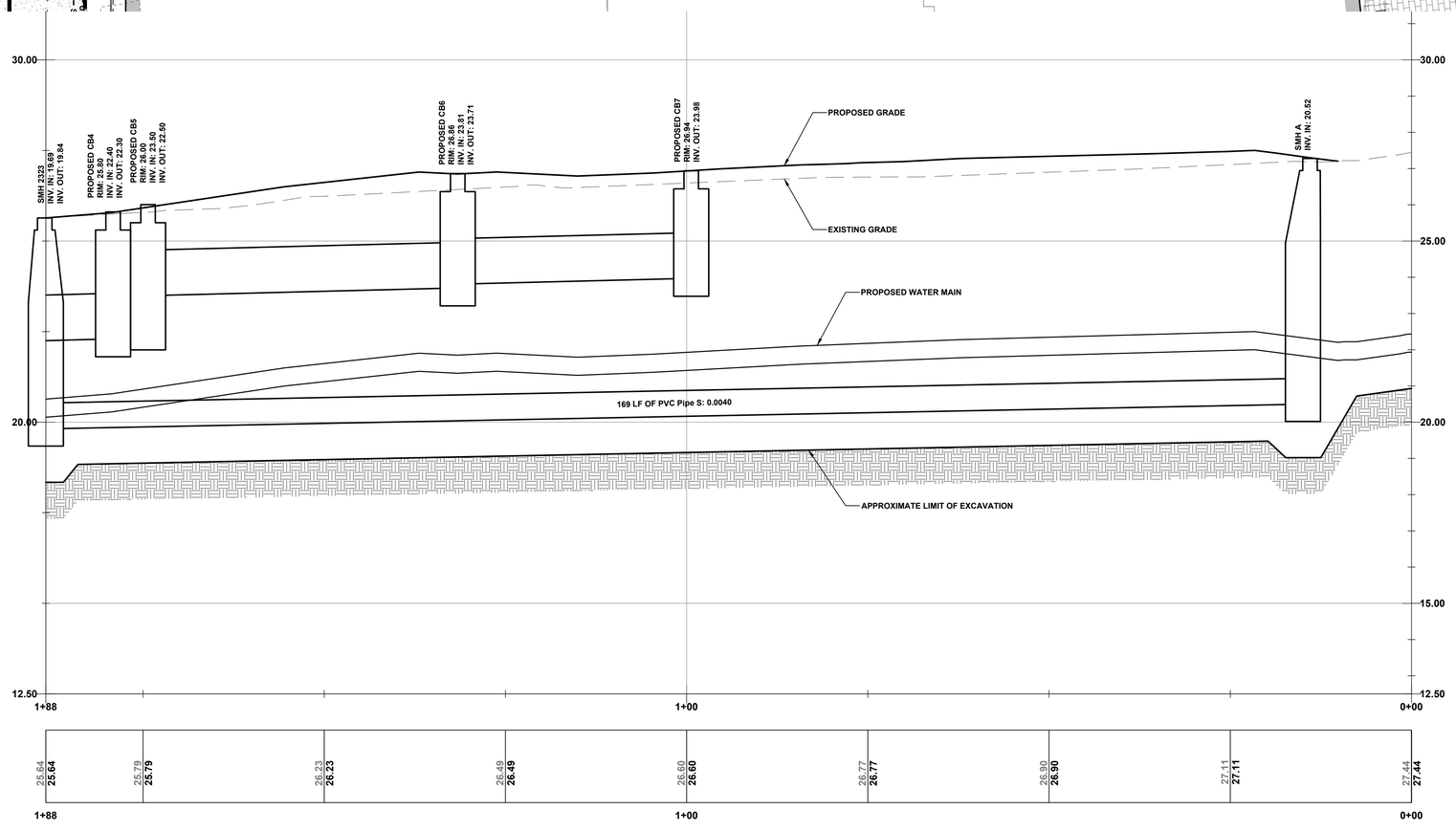

PROFILE VIEW OF HIGH STREET - STA 0+00 TO 1+88
SCALE: H: 1"=10' / V: 1"=4'

GRAPHIC SCALE

10 0 5 10 20 30

(IN FEET)
1 inch = 10 ft.

REV.	DATE	DESCRIPTION	BY	CHK.
2	2024.11.18	ISSUED FOR SITE PLAN REVIEW	PJM	JRC
1	2024.11.05	ISSUED FOR COMMENTS	PJM	JRC

DRAWING ISSUE STATUS

PERMIT PLANS

HALEY WARD
ENGINEERING | ENVIRONMENTAL | SURVEYING
WWW.HALEYWARD.COM
200 Griffin Rd. Unit 14
Portsmouth, New Hampshire 03801
603.430.9282

PROJECT

MIXED USE DEVELOPMENT
1-15 CONGRESS STREET PORTSMOUTH, N.H.

TITLE

PROPOSED PLAN & PROFILE
HIGH STREET

STATE OF NEW HAMPSHIRE
JOHN R. CHAGNON
No. 9851
LICENSED
PROFESSIONAL ENGINEER

DATE	SCALE
JULY 2024	1" = 10'

DRAWN BY	DESIGNED BY	CHECKED BY
PJM	---	JRC

PROJECT No. 5010156.3406

SHEET No. **C202**

REV. No. **2**

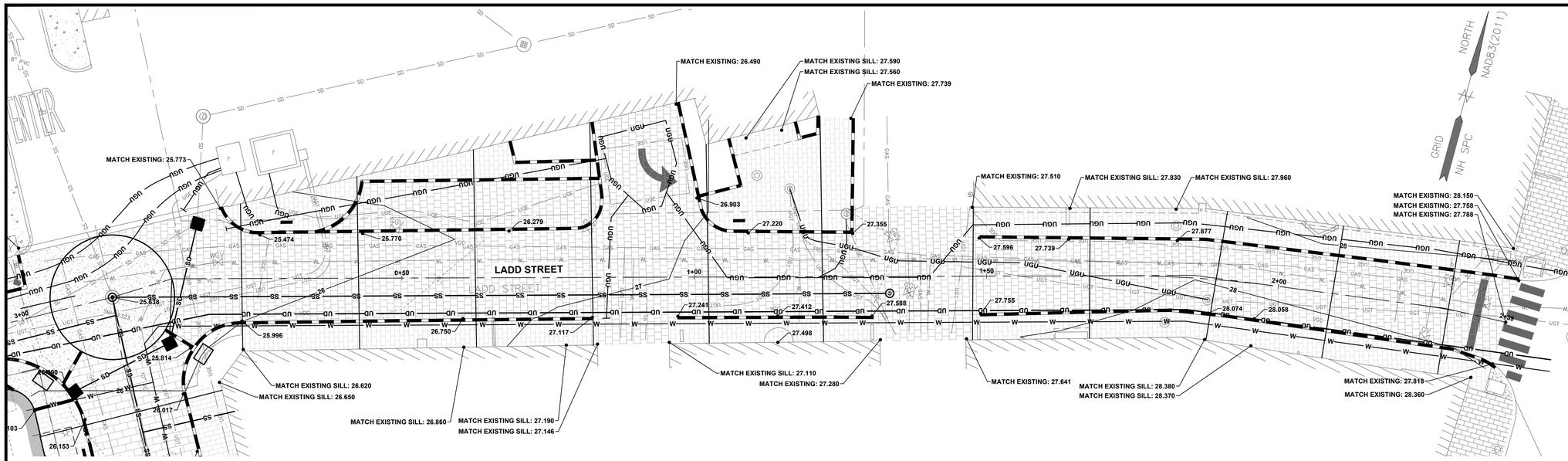

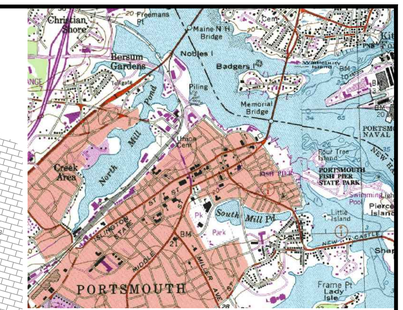

LOCATION MAP
SCALE: 1"=2000'

USGS QUADRANGLE: PORTSMOUTH
MAPTECH® USGS TOPOGRAPHIC SERIES™,
©MAPTECH®, INC. 978-933-3000
WWW.MAPTECH.COM/TOPO

NOTES:

1) THE CONTRACTOR SHALL NOTIFY DIG SAFE AT 1-888-DIG-SAFE (1-888-344-7233) AT LEAST 72 HOURS PRIOR TO COMMENCING ANY EXCAVATION ON PUBLIC OR PRIVATE PROPERTY WITHIN 100 FEET OF UNDERGROUND UTILITIES. THE EXCAVATOR IS RESPONSIBLE TO MAINTAIN MARKS. DIG SAFE TICKETS EXPIRE IN THIRTY DAYS.

2) UNDERGROUND UTILITY LOCATIONS ARE BASED UPON BEST AVAILABLE EVIDENCE AND ARE NOT FIELD VERIFIED. LOCATING AND PROTECTING ANY ABOVEGROUND OR UNDERGROUND UTILITIES IS THE SOLE RESPONSIBILITY OF THE CONTRACTOR AND/OR THE OWNER. UTILITY CONFLICTS SHOULD BE REPORTED AT ONCE TO THE DESIGN ENGINEER.

3) CONTRACTOR SHALL INSTALL AND MAINTAIN EROSION CONTROL MEASURES IN ACCORDANCE WITH THE "NEW HAMPSHIRE STORMWATER MANUAL, VOLUME 3, EROSION AND SEDIMENT CONTROLS DURING CONSTRUCTION. (NHDES DECEMBER 2008).

PROFILE NOTES:

1) EXISTING & PROPOSED GRADES SHOWN DEPICT CONDITIONS ALONG THE PROPOSED ALIGNMENT.

2) UNDERGROUND UTILITIES SHOWN IN PROFILE ARE PROJECTED TO THE ALIGNMENT AND MAY NOT ALIGN WITH THE PROPOSED GRADES SHOWN. FOR ADDITIONAL INFORMATION & DETAILED GRADING, REFER TO THE PLAN VIEW.

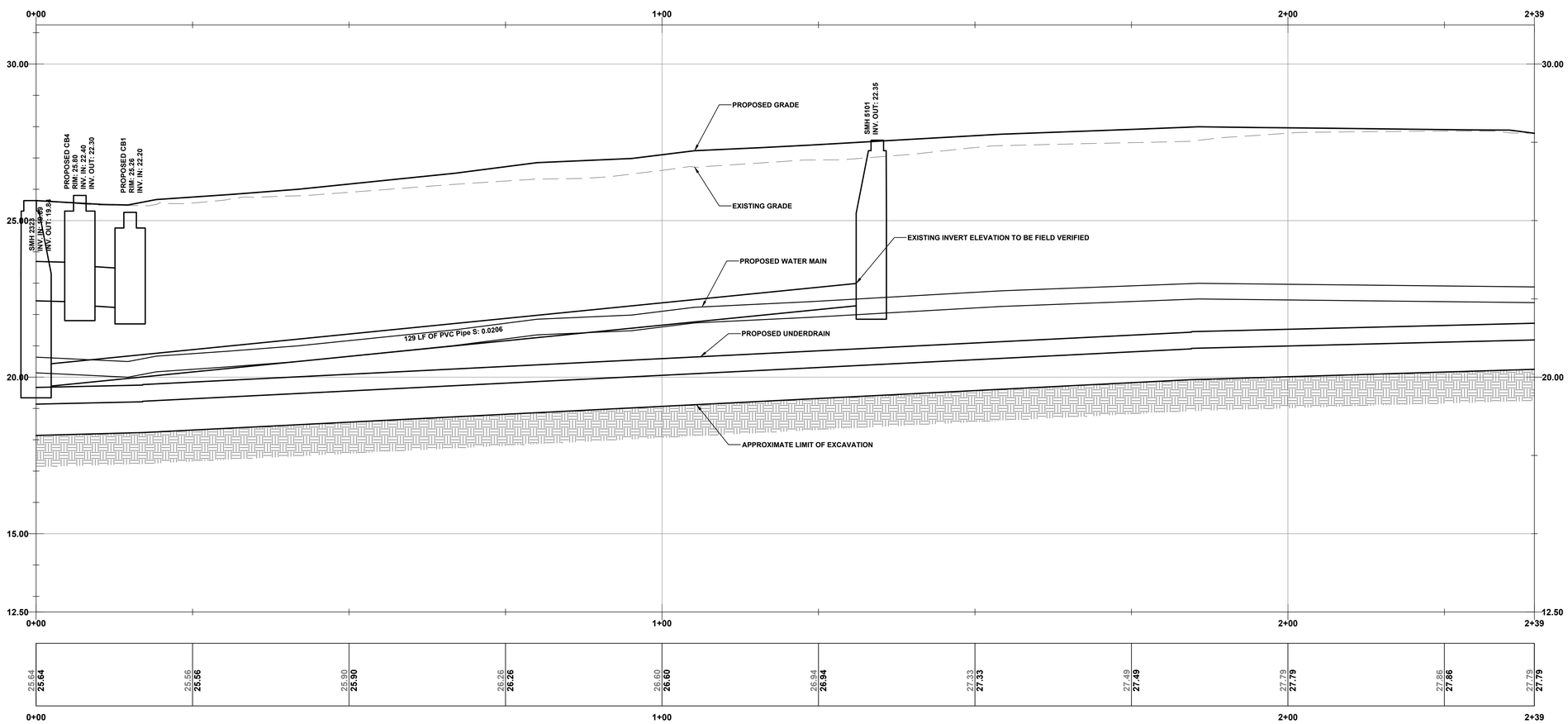

PROFILE VIEW OF LADD STREET - STA 0+00 TO 2+39
SCALE: H: 1"=10' / V: 1"=4'

GRAPHIC SCALE

10 0 5 10 20 30

(IN FEET)
1 inch = 10 ft.

REV.	DATE	DESCRIPTION	BY	CHK.
2	2024.11.18	ISSUED FOR SITE PLAN REVIEW	PJM	JRC
1	2024.11.05	ISSUED FOR COMMENTS	PJM	JRC

DRAWING ISSUE STATUS

PERMIT PLANS

HALEY WARD
ENGINEERING | ENVIRONMENTAL | SURVEYING
200 Griffin Rd. Unit 14
Portsmouth, New Hampshire 03801
603.430.9282
WWW.HALEYWARD.COM

PROJECT

MIXED USE DEVELOPMENT
1-15 CONGRESS STREET PORTSMOUTH, N.H.

TITLE

PROPOSED PLAN & PROFILE
LADD STREET

STATE OF NEW HAMPSHIRE JOHN R. CHAGNON No. 7851 LICENSED PROFESSIONAL ENGINEER

DATE	SCALE
JULY 2024	1" = 10'

DRAWN BY	DESIGNED BY	CHECKED BY
PJM	---	JRC

PROJECT No. 5010156.3406

SHEET No. **C203** REV. No. **2**

1 **BASEMENT PB**
1/16" = 1'-0"

ARCOVE ARCHITECTS
3 CONGRESS ST., SUITE1
PORTSMOUTH NH 03801
603.988.0042
www.ARCove.com

1 & 15 Congress Street

1 & 15 CONGRESS STREET
PORTSMOUTH, NH, 03801

PROJECT NO: 1002.1

OWNER
ONE MARKET SQUARE, LLC
10 PLEASANT STREET, SUITE 3
PORTSMOUTH, NH 03801
603.427.0725

CIVIL ENGINEERING
AMBIT ENGINEERING; A DIVISION OF HALEY WARD
200 GRIFFIN ROAD, UNIT 3
PORTSMOUTH, NH 03801
603.430.9282
https://www.haleyward.com/

LANDSCAPE ARCHITECTURE
TERRAFIRMA
163.A Court Street
Portsmouth, NH 03801
603.531.9109
www.terrafirmalandarch.com

JJ NEWBERRIES CONCEPTS

REVISIONS

NO.	DATE	DESCRIPTION

BASEMENT PLAN

4' 16'
0' 8' 32'
N

SCALE: 1/16" = 1'-0"
DATE: 11/18/24
DRAWN: Author
CHECKED: Checker

PBN.A0

COPYRIGHT ©2024

1 **LEVEL 1 pb**
1/16" = 1'-0"

ARCOVE ARCHITECTS
3 CONGRESS ST., SUITE1
PORTSMOUTH NH 03801
603.988.0042
www.ARCove.com

1 & 15 Congress Street

1 & 15 CONGRESS STREET
PORTSMOUTH, NH, 03801

PROJECT NO: 1002.1

OWNER
ONE MARKET SQUARE, LLC
10 PLEASANT STREET, SUITE 3
PORTSMOUTH, NH 03801
603.427.0725

CIVIL ENGINEERING
AMBIT ENGINEERING; A DIVISION OF HALEY WARD
200 GRIFFIN ROAD, UNIT 3
PORTSMOUTH, NH 03801
603.430.9282
https://www.haleyward.com/

LANDSCAPE ARCHITECTURE
TERRAFIRMA
163.A Court Street
Portsmouth, NH 03801
603.531.9109
www.terrafirmalandarch.com

JJ NEWBERRIES CONCEPTS

REVISIONS

NO.	DATE	DESCRIPTION

LEVEL 1

0' 8' 4' 16' 32'
N

SCALE: 1/16" = 1'-0"
DATE: 11/18/24
DRAWN: HA
CHECKED: TK

PBN.A1

COPYRIGHT ©2024

1 LEVEL 2 pb
1/16" = 1'-0"

ARCOVE ARCHITECTS
3 CONGRESS ST., SUITE1
PORTSMOUTH NH 03801
603.988.0042
www.ARCove.com

1 & 15 Congress Street

1 & 15 CONGRESS STREET
PORTSMOUTH, NH, 03801

PROJECT NO: 1002.1

OWNER
ONE MARKET SQUARE, LLC
10 PLEASANT STREET, SUITE 3
PORTSMOUTH, NH 03801
603.427.0725

CIVIL ENGINEERING
AMBIT ENGINEERING; A DIVISION OF HALEY WARD
200 GRIFFIN ROAD, UNIT 3
PORTSMOUTH, NH 03801
603.430.9282
https://www.haleyward.com/

LANDSCAPE ARCHITECTURE
TERRAFIRMA
163.A Court Street
Portsmouth, NH 03801
603.531.9109
www.terrafirmalandarch.com

JJ NEWBERRIES CONCEPTS

REVISIONS

NO.	DATE	DESCRIPTION

LEVEL 2

4' 16'
0' 8' 32'
N

SCALE: 1/16" = 1'-0"
DATE: 11/18/24
DRAWN: Author
CHECKED: Checker

PBN.A2

COPYRIGHT ©2024

1 **LEVEL 3 pb**
1/16" = 1'-0"

ARCOVE ARCHITECTS

3 CONGRESS ST., SUITE1
PORTSMOUTH NH 03801
603.988.0042
www.ARCove.com

1 & 15 Congress Street

1 & 15 CONGRESS STREET
PORTSMOUTH, NH, 03801

PROJECT NO: 1002.1

OWNER
ONE MARKET SQUARE, LLC
10 PLEASANT STREET, SUITE 3
PORTSMOUTH, NH 03801
603.427.0725

CIVIL ENGINEERING
AMBIT ENGINEERING; A DIVISION OF HALEY WARD
200 GRIFFIN ROAD, UNIT 3
PORTSMOUTH, NH 03801
603.430.9282
https://www.haleyward.com/

LANDSCAPE ARCHITECTURE
TERRAFIRMA
163.A Court Street
Portsmouth, NH 03801
603.531.9109
www.terrafirmalandarch.com

JJ NEWBERRIES CONCEPTS

REVISIONS

NO.	DATE	DESCRIPTION

LEVEL 3

4' 16'
0' 8' 32'
N

SCALE: 1/16" = 1'-0"

DATE: 11/18/24
DRAWN: Author
CHECKED: Checker

PBN.A3

COPYRIGHT ©2024

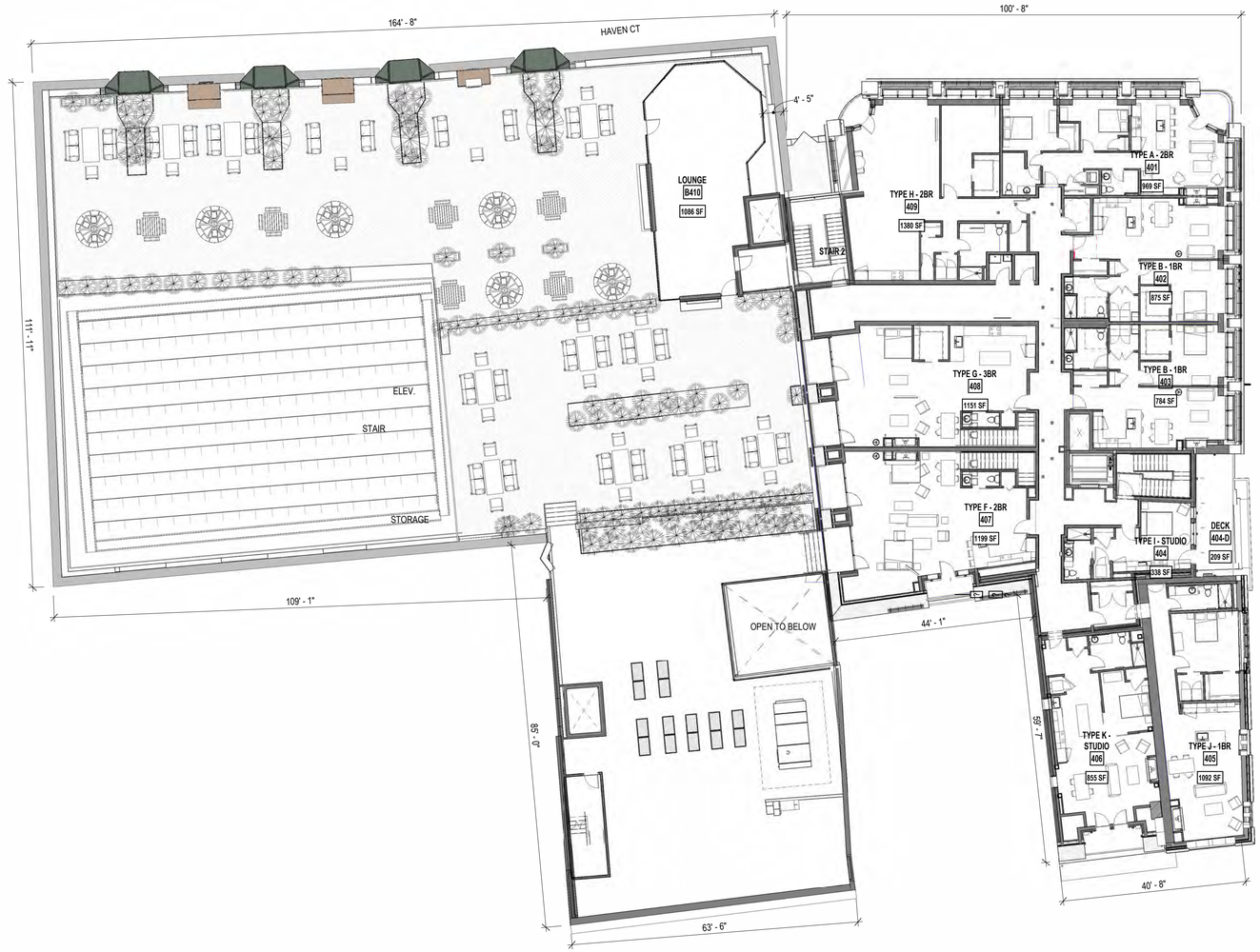

1 **PENTHOUSE - ATTIC pb**
1/16" = 1'-0"

ARCOVE ARCHITECTS

3 CONGRESS ST., SUITE1
PORTSMOUTH NH 03801
603.988.0042
www.ARCove.com

1 & 15 Congress Street

1 & 15 CONGRESS STREET
PORTSMOUTH, NH, 03801

PROJECT NO: 1002.1

OWNER
ONE MARKET SQUARE, LLC
10 PLEASANT STREET, SUITE 3
PORTSMOUTH, NH 03801
603.427.0725

CIVIL ENGINEERING
AMBIT ENGINEERING; A DIVISION OF HALEY WARD
200 GRIFFIN ROAD, UNIT 3
PORTSMOUTH, NH 03801
603.430.9282
https://www.haleyward.com/

LANDSCAPE ARCHITECTURE
TERRAFIRMA
163.A Court Street
Portsmouth, NH 03801
603.531.9109
www.terrafirmalandarch.com

JJ NEWBERRIES CONCEPTS

REVISIONS

NO.	DATE	DESCRIPTION

PENTHOUSE-ATTIC LEVEL

4' 16'
0' 8' 32'
N

SCALE: 1/16" = 1'-0"

DATE: 11/18/24
DRAWN: Author
CHECKED: Checker

PBN.A4

COPYRIGHT ©2024

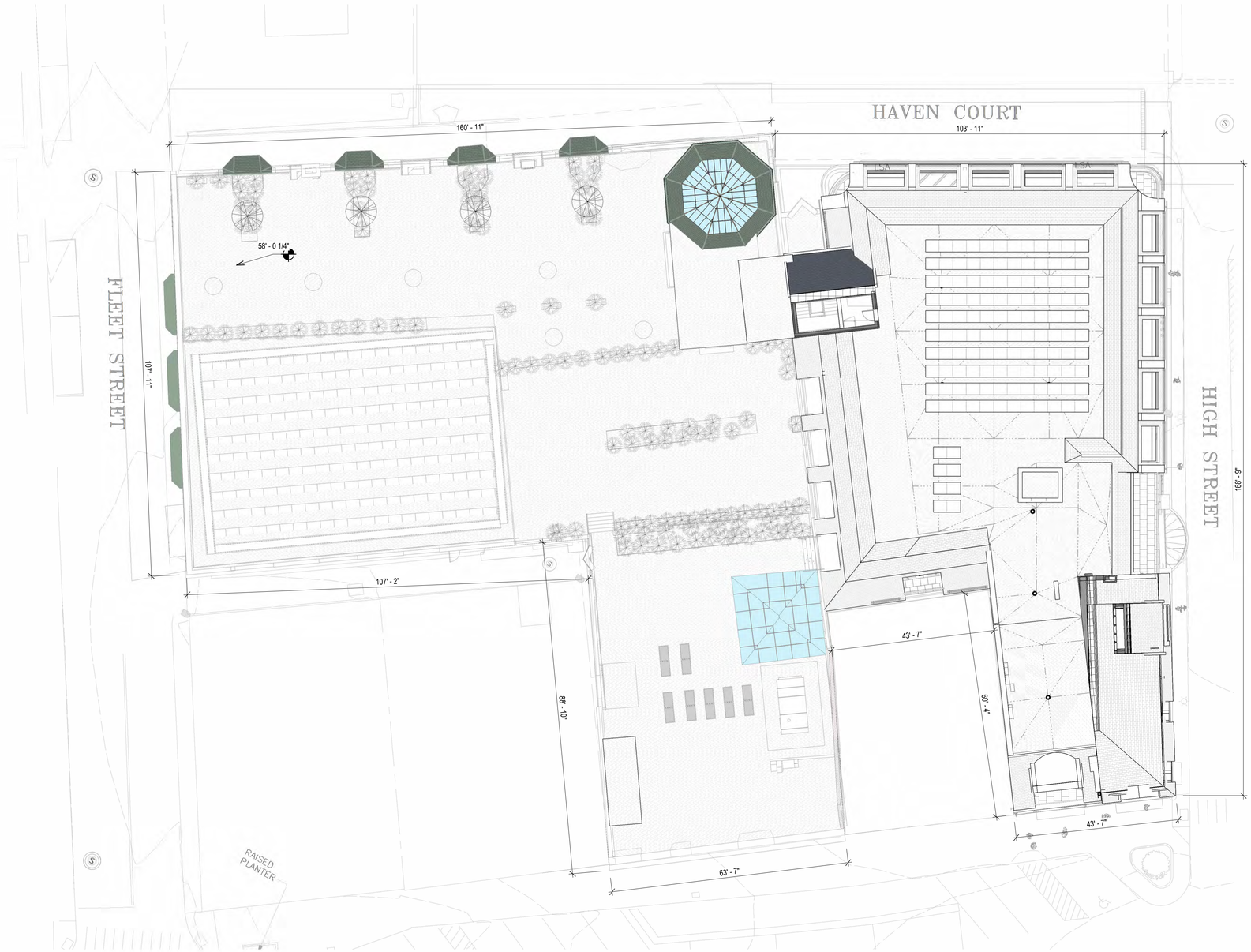

1 **ROOF PLAN**
1/16" = 1'-0"

ARCOVE ARCHITECTS
3 CONGRESS ST., SUITE1
PORTSMOUTH NH 03801
603.988.0042
www.ARCove.com

1 & 15 Congress Street

1 & 15 CONGRESS STREET
PORTSMOUTH, NH, 03801

PROJECT NO: 1002.1

OWNER
ONE MARKET SQUARE, LLC
10 PLEASANT STREET, SUITE 3
PORTSMOUTH, NH 03801
603.427.0725

CIVIL ENGINEERING
AMBIT ENGINEERING; A DIVISION OF HALEY WARD
200 GRIFFIN ROAD, UNIT 3
PORTSMOUTH, NH 03801
603.430.9282
https://www.haleyward.com/

LANDSCAPE ARCHITECTURE
TERRAFIRMA
163 A Court Street
Portsmouth, NH 03801
603.531.9109
www.terrafirmalandarch.com

JJ NEWBERRIES CONCEPTS

REVISIONS

NO.	DATE	DESCRIPTION

ROOF PLAN

GRAPHIC SCALE: 1/16" = 1'-0"
0' 8' 16' 32'

N

SCALE: 1/16" = 1'-0"
DATE: 11/18/24
DRAWN: Author
CHECKED: Checker

PBN.A5

COPYRIGHT ©2024

1 (CONGRESS STREET)
1/8" = 1'-0"

2 SOUTH ELEVATION (FLEET STREET)
1/8" = 1'-0"

ARCOVE ARCHITECTS
3 CONGRESS ST., SUITE1
PORTSMOUTH NH 03801
603.988.0042
www.ARCove.com

1 & 15 Congress Street

1 & 15 CONGRESS STREET
PORTSMOUTH, NH, 03801

PROJECT NO: 1002.1

OWNER
ONE MARKET SQUARE, LLC
10 PLEASANT STREET, SUITE 3
PORTSMOUTH, NH 03801
603.427.0725

CIVIL ENGINEERING
AMBIT ENGINEERING; A DIVISION OF HALEY WARD
200 GRIFFIN ROAD, UNIT 3
PORTSMOUTH, NH 03801
603.430.9282
https://www.haleyward.com/

LANDSCAPE ARCHITECTURE
TERRAFIRMA
163.A Court Street
Portsmouth, NH 03801
603.531.9109
www.terrafirmalandarch.com

JJ NEWBERRIES CONCEPTS

REVISIONS

NO.	DATE	DESCRIPTION

ELEVATIONS

SCALE: 1/8" = 1'-0"
DATE: 11/18/24
DRAWN: Author
CHECKED: Checker

PBN.A6

COPYRIGHT ©2024

2 **(NEWBERRY WAY)**
1/16" = 1'-0"

1 **HIGH STREET**
1/16" = 1'-0"

ARCOVE ARCHITECTS

3 CONGRESS ST., SUITE1
PORTSMOUTH NH 03801
603.988.0042
www.ARCove.com

1 & 15 Congress Street

1 & 15 CONGRESS STREET
PORTSMOUTH, NH, 03801

PROJECT NO: 1002.1

OWNER
ONE MARKET SQUARE, LLC
10 PLEASANT STREET, SUITE 3
PORTSMOUTH, NH 03801
603.427.0725

CIVIL ENGINEERING
AMBIT ENGINEERING; A DIVISION OF HALEY WARD
200 GRIFFIN ROAD, UNIT 3
PORTSMOUTH, NH 03801
603.430.9282
https://www.haleyward.com/

LANDSCAPE ARCHITECTURE
TERRAFIRMA
163.A Court Street
Portsmouth, NH 03801
603.531.9109
www.terrafirmalandarch.com

JJ NEWBERRIES CONCEPTS

REVISIONS

NO.	DATE	DESCRIPTION

ELEVATIONS

SCALE: 1/16" = 1'-0"
DATE: 11/18/24
DRAWN: Author
CHECKED: Checker

PBN.A7

COPYRIGHT ©2024

ARCOVE ARCHITECTS
3 CONGRESS ST., SUITE1
PORTSMOUTH NH 03801
603.988.0042
www.ARCove.com

1 & 15 Congress Street

1 & 15 CONGRESS STREET
PORTSMOUTH, NH, 03801

PROJECT NO: 1002.1

OWNER
ONE MARKET SQUARE, LLC
10 PLEASANT STREET, SUITE 3
PORTSMOUTH, NH 03801
603.427.0725

CIVIL ENGINEERING
AMBIT ENGINEERING; A DIVISION OF HALEY WARD
200 GRIFFIN ROAD, UNIT 3
PORTSMOUTH, NH 03801
603.430.9282
https://www.haleyward.com/

LANDSCAPE ARCHITECTURE
TERRAFIRMA
163.A Court Street
Portsmouth, NH 03801
603.531.9109
www.terrafirmalandarch.com

JJ NEWBERRIES CONCEPTS

REVISIONS

NO.	DATE	DESCRIPTION

3D VIEW - BIRDSEYE

SCALE:

DATE: 11/18/24
DRAWN: Author
CHECKED: Checker

PBN.A8

COPYRIGHT ©2024

ARCOVE
ARCHITECTS

3 CONGRESS ST., SUITE1
PORTSMOUTH NH 03801
603.988.0042
www.ARCove.com

1 & 15 Congress Street

1 & 15 CONGRESS STREET
PORTSMOUTH, NH, 03801

PROJECT NO: 1002.1

OWNER
ONE MARKET SQUARE, LLC
10 PLEASANT STREET, SUITE 3
PORTSMOUTH, NH 03801
603.427.0725

CIVIL ENGINEERING
AMBIT ENGINEERING; A DIVISION OF HALEY WARD
200 GRIFFIN ROAD, UNIT 3
PORTSMOUTH, NH 03801
603.430.9282
https://www.haleyward.com/

LANDSCAPE ARCHITECTURE
TERRAFIRMA
163.A Court Street
Portsmouth, NH 03801
603.531.9109
www.terrafirmalandarch.com

JJ NEWBERRIES CONCEPTS

REVISIONS

NO.	DATE	DESCRIPTION

3D VIEWS - STREET LEVEL

SCALE:

DATE: 11/18/24
DRAWN: Author
CHECKED: Checker

PBN.A9

COPYRIGHT ©2024

LANDSCAPE NOTES:

1. THE CONTRACTOR SHALL LOCATE AND VERIFY THE EXISTENCE OF ALL UTILITIES PRIOR TO STARTING WORK.
2. THE CONTRACTOR SHALL SUPPLY ALL PLANT MATERIALS IN QUANTITIES SUFFICIENT TO COMPLETE THE PLANTINGS SHOWN ON THE DRAWINGS.
3. ALL MATERIAL SHALL CONFORM TO THE GUIDELINES ESTABLISHED BY THE CURRENT AMERICAN STANDARD FOR NURSERY STOCK PUBLISHED BY THE AMERICAN ASSOCIATION OF NURSERYMEN.
4. ALL PLANT SUBSTITUTIONS MUST BE APPROVED BY THE LANDSCAPE ARCHITECT.
5. ALL PLANT MATERIALS SHALL BE EXACTLY AS SPECIFIED BY THE LANDSCAPE ARCHITECT. IF PLANT SPECIES CULTIVARS ARE FOUND TO VARY FROM THAT SPECIFIED AT ANY TIME DURING THE GUARANTEE PERIOD, THE LANDSCAPE ARCHITECT RESERVES THE RIGHT TO HAVE THE CONTRACTOR REPLACE THAT PLANT MATERIAL. THE LANDSCAPE ARCHITECT RESERVES THE RIGHT TO REJECT ANY PLANT DELIVERED TO THE SITE FOR AESTHETIC REASONS BEFORE PLANTING. THE LANDSCAPE CONTRACTOR IS RESPONSIBLE FOR THE QUALITY FOR ALL THE PLANTS.
6. PLANTS SHALL BE SUBJECT TO INSPECTION AND APPROVAL AT THE PLACE OF GROWTH, UPON DELIVERY OR AT THE JOB SITE WHILE WORK IS ON-GOING TO CONFORMITY TO SPECIFIED QUALITY, SIZE AND VARIETY.
7. PLANTS FURNISHED IN CONTAINERS SHALL HAVE THE ROOTS WELL ESTABLISHED IN THE SOIL MASS AND SHALL HAVE AT LEAST ONE (1) GROWING SEASON. ROOT-BOUND PLANTS OR INADEQUATELY SIZED CONTAINERS TO SUPPORT THE PLANT MAY BE DEEMED UNACCEPTABLE.
8. NO PLANT SHALL BE PUT IN THE GROUND BEFORE GRADING HAS BEEN FINISHED AND APPROVED BY THE LANDSCAPE ARCHITECT.
9. ALL PLANTS SHALL BE INSTALLED AND DETAILED PER PROJECT SPECIFICATIONS.
10. ALL PLANTS SHALL BE WATERED THOROUGHLY TWICE DURING THE FIRST 24-HOUR PERIOD AFTER PLANTING. ALL PLANTS SHALL BE WATERED WEEKLY, OR MORE OFTEN IF NECESSARY, DURING THE FIRST GROWING SEASON.
11. ALL PLANTS SHALL BE GUARANTEED BY THE CONTRACTOR FOR NOT LESS THAN ONE FULL YEAR FROM THE TIME OF PROVISIONAL ACCEPTANCE. DURING THIS TIME, THE OWNER SHALL MAINTAIN ALL PLANT MATERIALS IN THE ABOVE MANNER. IT IS THE CONTRACTOR'S RESPONSIBILITY TO INSPECT THE PLANTS TO ENSURE PROPER CARE. IF THE CONTRACTOR IS DISSATISFIED WITH THE CARE GIVEN, HE SHALL IMMEDIATELY, AND IN SUFFICIENT TIME TO PERMIT THE CONDITION TO BE RECTIFIED, NOTIFY THE LANDSCAPE ARCHITECT IN WRITING OR OTHERWISE FORFEIT HIS CLAIM. LANDSCAPE CONTRACTOR SHALL PRUNE PLANTINGS OF DEAD LIMBS OR TWIGS DURING THE FIRST YEAR OF GROWTH.
12. FINAL ACCEPTANCE BY THE LANDSCAPE ARCHITECT WILL BE MADE UPON THE CONTRACTOR'S REQUEST AFTER ALL CORRECTIVE WORK HAS BEEN COMPLETED.
13. LANDSCAPE CONTRACTOR SHOULD REPLACE DEAD PLANTINGS IMMEDIATELY UPON OWNER DIRECTION WITHIN THE WARRANTY PERIOD AND AGAIN AT THE END OF THE GUARANTEE PERIOD, THE CONTRACTOR SHALL HAVE REPLACED ANY PLANT MATERIAL THAT IS MISSING, NOT TRUE TO SIZE AS SPECIFIED, THAT HAVE DIED, THAT HAVE LOST THEIR NATURAL SHAPE DUE TO DEAD BRANCHES, EXCESSIVE PRUNING OR INADEQUATE OR IMPROPER CARE, OR THAT ARE, IN THE OPINION OF THE LANDSCAPE ARCHITECT, IN UNHEALTHY OR UNSIGHTLY CONDITION.
14. ALL LANDSCAPE AREAS TO BE GRASS COMMON TO REGION EXCEPT FOR INTERIOR LANDSCAPED ISLANDS OR WHERE OTHER PLANT MATERIAL IS CALLED FOR.
15. ALL TREES AND SHRUBS TO BE PLANTED IN MULCH BEDS WITH DEFINED AND CUT EDGES TO SEPARATE TURF GRASS AREAS.
16. FOR ANY LANDSCAPE AREA SO DESIGNATED TO REMAIN, WHETHER ON OR OFF-SITE, REMOVE WEEDS, ROCKS, CONSTRUCTION ITEMS, ETC., THEN APPLY GRASS SEED OR PINE BARK MULCH AS DEPICTED ON PLANS.
17. LANDSCAPE CONTRACTOR SHALL FEED AND PRUNE EX. TREES, ON OR JUST OFF SITE, THAT HAVE EXPERIENCED ROOT BASE INTRUSION OR DAMAGE DURING CONSTRUCTION IMMEDIATELY AND FOR THE DURATION OF THE WARRANTY PERIOD AT THE DIRECTION OF THE LANDSCAPE ARCHITECT.
18. EXISTING TREES TO REMAIN SHALL BE PROTECTED WITH TEMPORARY SNOW FENCING AT THE EDGE OF THE EX. TREE CANOPY THE CONTRACTOR SHALL NOT STORE VEHICLES OR MATERIALS WITHIN THE LANDSCAPED AREAS. ANY DAMAGE TO EXISTING TREES, SHRUBS OR LAWN SHALL BE REPAIRED BY THE CONTRACTOR AT NO ADDITIONAL COST TO THE OWNER.
19. ALL MULCH AREAS SHALL RECEIVE A 2" LAYER OF SHREDDED PINE BARK MULCH.
20. ALL WORK SHALL BE DONE IN STRICT ACCORDANCE WITH PROJECT SPECIFICATIONS.

PLEASE NOTE: THIS SHEET IS SCALED FOR 22 BY 34 PAPER, DO NOT REDUCE OR ENLARGE. .

terra firma
landscape architecture
163.a court street · portsmouth, nh 03801
office 603.430.8388 | terrence@terrafirmalandarch.com

No.	Date	By	Revision Notes

No.	Date	Issue Notes
F	10/11/2024	PLANTING UPDATE
E	9/30/2024	CATENARY LIGHT ADJUSTMENT
D	8/12/2024	SITE AMENTITIES AND MATERIALS UPDATED
C	8/2/2024	ALLEY DOOR LOCATION UPDATES
B	7/31/2024	SHEET UPDATES
A	7/24/2024	SOUTH ALLEY UPDATES

Design Firm: terra firma landscape architecture
163.a Court Street
Portsmouth, NH 03801

Consultant:

Project Title: NEWBERRY WAY

Sheet Title: LANDSCAPE PLAN

Project Manager	Project ID: NEWBERRY WAY
Drawn By: TC	Scale: 1"=20'-0"
Reviewed By: TP	Sheet No. L-01 of 1
Date: 7/18/2024	
CAD File Name: newberry101025.vwx	

PLEASE NOTE: THIS SHEET IS SCALED FOR 22 BY 34 PAPER, DO NOT REDUCE OR ENLARGE. .

terra firma
landscape architecture
163.a court street · portsmouth, nh 03801
office 603.430.8388 | terrence@terrafirmalandarch.com

No.	Date	By	Revision Notes
F	10/11/2024		PLANTING UPDATE
E	9/30/2024		CATENARY LIGHT ADJUSTMENT
D	8/12/2024		SITE AMENTITIES AND MATERIALS UPDATED
C	8/2/2024		ALLEY DOOR LOCATION UPDATES
B	7/31/2024		SHEET UPDATES
A	7/24/2024		SOUTH ALLEY UPDATES

No.	Date	Issue Notes

Design Firm: terra firma landscape architecture, 163.a Court Street, Portsmouth, NH 03801

Consultant:

Project Title: NEWBERRY WAY

Sheet Title: LANDSCAPE PLAN

Project Manager: TC	Project ID: NEWBERRY WAY
Drawn By: TC	Scale: 1"=10'-0"
Reviewed By: TP	Sheet No. L-01A of 1
Date: 7/18/2024	
CAD File name: newberry101025.vwx	

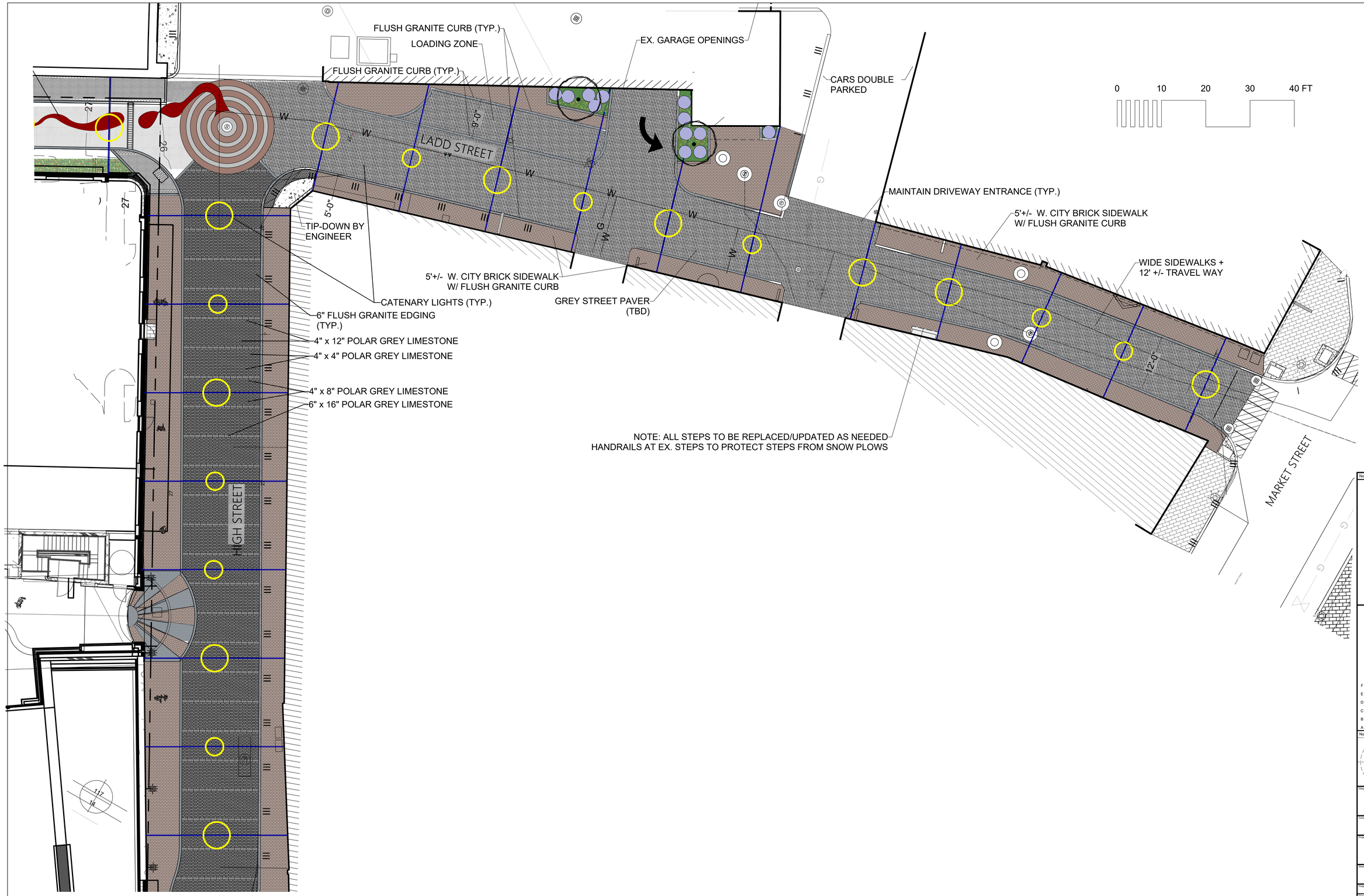

PLEASE NOTE: THIS SHEET IS SCALED FOR 22 BY 34 PAPER, DO NOT REDUCE OR ENLARGE. .

terra firma
landscape architecture
163.a court street · portsmouth, nh 03801
office: 603.430.8388 | terrence@terrafirmalandarch.com

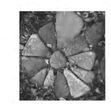

No.	Date	By	Revision Notes
F	10/11/2024		PLANTING UPDATE
E	9/30/2024		CATENARY LIGHT ADJUSTMENT
D	8/12/2024		SITE AMENTITIES AND MATERIALS UPDATED
C	8/2/2024		ALLEY DOOR LOCATION UPDATES
B	7/31/2024		SHEET UPDATES
A	7/24/2024		SOUTH ALLEY UPDATES

No.	Date	Issue Notes

Design Firm
terra firma landscape architecture
163.a Court Street
Portsmouth, NH 03801

Consultant

Project Title
NEWBERRY WAY

Sheet Title
LANDSCAPE PLAN

Project Manager	Project ID: NEWBERRY WAY
Drawn By: TC	Scale: 1"=10'-0"
Reviewed By: TP	Sheet No. L-01B
Date: 7/18/2024	of
CAD File name: newberry101025.vwx	1

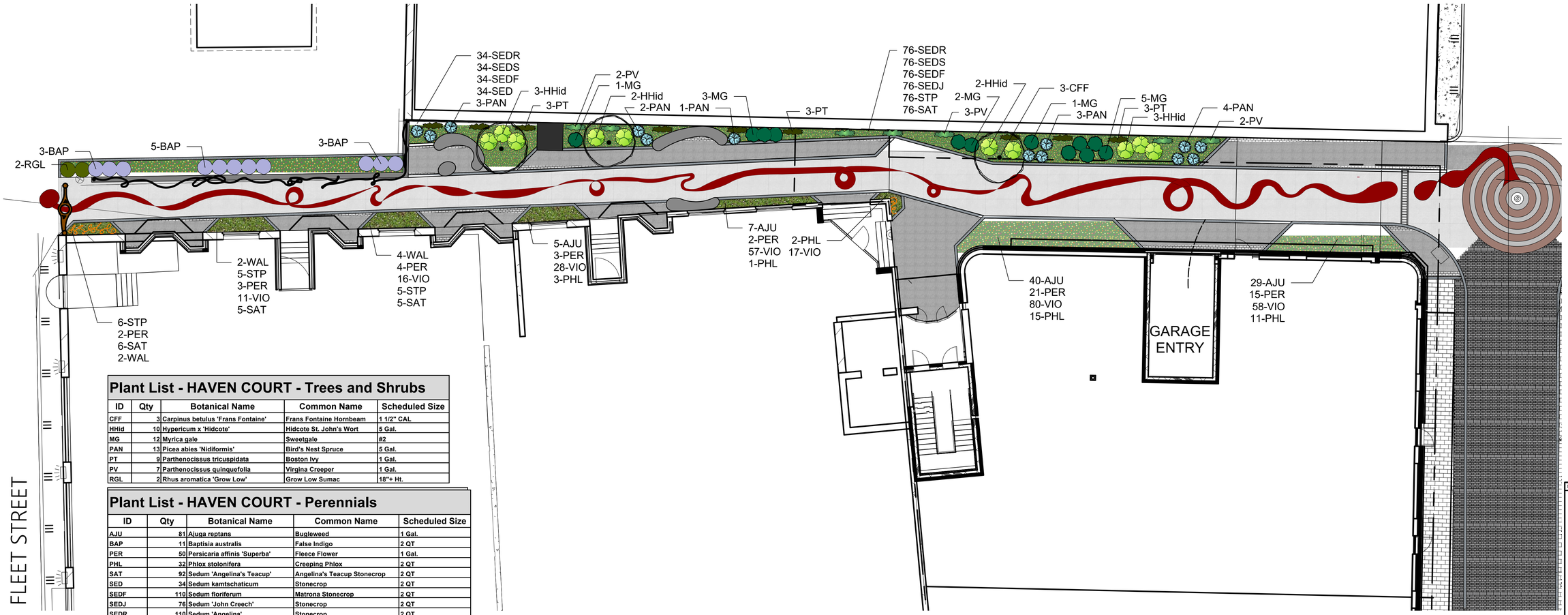

Plant List - HAVEN COURT - Trees and Shrubs

ID	Qty	Botanical Name	Common Name	Scheduled Size
CFF	3	Carpinus betulus 'Frans Fontaine'	Frans Fontaine Hornbeam	1 1/2" CAL
HHid	10	Hypericum x 'Hidcote'	Hidcote St. John's Wort	5 Gal.
MG	12	Myrica gale	Sweetgale	#2
PAN	13	Picea abies 'Nidiformis'	Bird's Nest Spruce	5 Gal.
PT	9	Parthenocissus tricuspidata	Boston Ivy	1 Gal.
PV	7	Parthenocissus quinquefolia	Virgina Creeper	1 Gal.
RGL	2	Rhus aromatica 'Grow Low'	Grow Low Sumac	18"+ Ht.

Plant List - HAVEN COURT - Perennials

ID	Qty	Botanical Name	Common Name	Scheduled Size
AJU	81	Ajuga reptans	Bugleweed	1 Gal.
BAP	11	Baptisia australis	False Indigo	2 QT
PER	50	Persicaria affinis 'Superba'	Fleece Flower	1 Gal.
PHL	32	Phlox stolonifera	Creeping Phlox	2 QT
SAT	92	Sedum 'Angelina's Teacup'	Angelina's Teacup Stonecrop	2 QT
SED	34	Sedum kamtschaticum	Stonecrop	2 QT
SEDF	110	Sedum floriferum	Matrona Stonecrop	2 QT
SEDJ	76	Sedum 'John Creech'	Stonecrop	2 QT
SEDR	110	Sedum 'Angelina'	Stonecrop	2 QT
SEDS	110	Sedum sexangulare	Stonecrop	2 QT
STP	92	Sedum ternatum 'Larinem Park'	Stonecrop	2 QT
VIO	267	Viola pedata	Bird's Foot Violet	1 Quart
WAL	8	Waldsteinia ternata	Siberian Barren Strawberry	2 QT

HAVEN COURT PLANTING

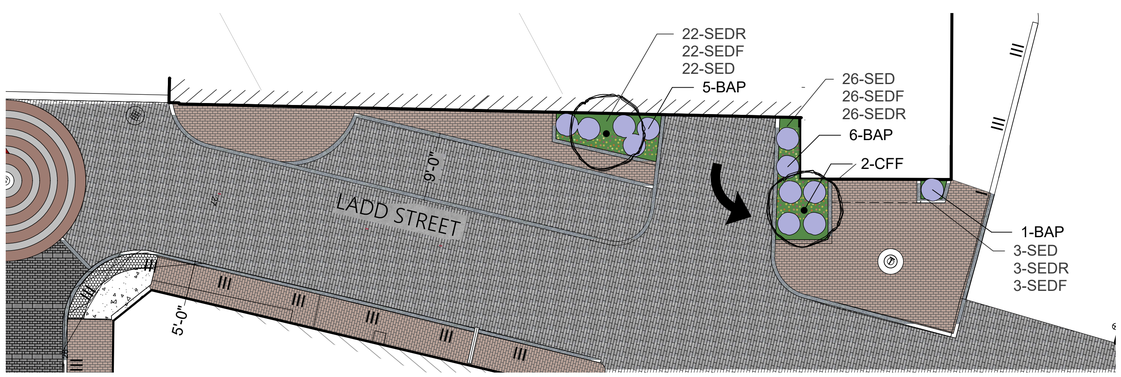

Plant List - LADD STREET - Trees and Shrubs

ID	Qty	Botanical Name	Common Name	Scheduled Size
CFF	2	Carpinus betulus 'Frans Fontaine'	Frans Fontaine Hornbeam	2 1/2" CAL

Plant List - LADD STREET - Perennials

ID	Qty	Botanical Name	Common Name	Scheduled Size
BAP	12	Baptisia australis	False Indigo	2 QT
SED	51	Sedum kamtschaticum	Stonecrop	2 QT
SEDF	51	Sedum floriferum	Matrona Stonecrop	2 QT
SEDR	51	Sedum 'Angelina'	Stonecrop	2 QT

LADD STREET PLANTING

0 10 20 30 40 FT

PLEASE NOTE: THIS SHEET IS SCALED FOR 22 BY 34 PAPER, DO NOT REDUCE OR ENLARGE. .

terra firma
landscape architecture
163.a court street · portsmouth, nh 03801
office 603.430.8388 | terrence@terrafirmalandarch.com

No.	Date	By	Revision Notes

No.	Date	Issue Notes
F	10/11/2024	PLANTING UPDATE
E	9/30/2024	CATENARY LIGHT ADJUSTMENT
D	8/12/2024	SITE AMENTITIES AND MATERIALS UPDATED
C	8/2/2024	ALLEY DOOR LOCATION UPDATES
B	7/31/2024	SHEET UPDATES
A	7/24/2024	SOUTH ALLEY UPDATES

Design Firm: terra firma landscape architecture
163.a Court Street
Portsmouth, NH 03801

Consultant:

Project Title: NEWBERRY WAY

Sheet Title: LANDSCAPE PLAN - PLANTING

Project Manager: TC	Project ID: NEWBERRY WAY
Drawn By: TC	Scale: 1/4"=1'-0"
Reviewed By: TP	Sheet No. L-02
Date: 1/11/2023	of 1
CAD File Name: newberry101025.vwx	

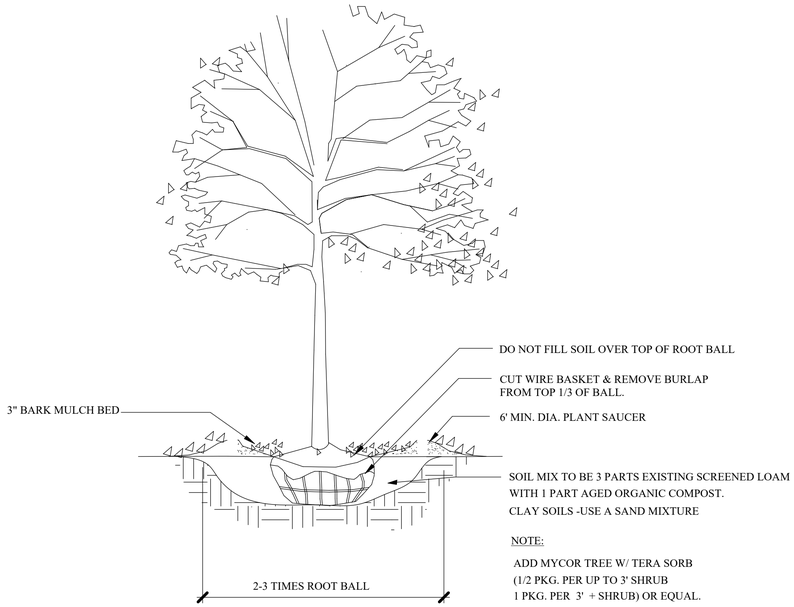

1 / L-3 TREE PLANTING - 2"+ CAL.
SCALE: NTS

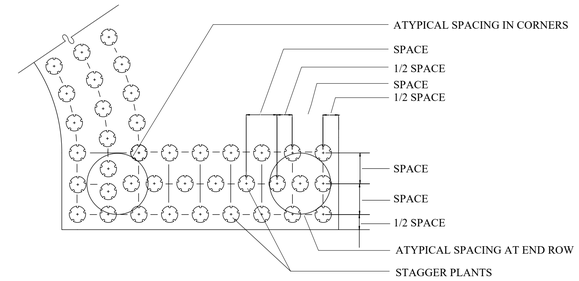

NOTES:

1. PLACE PLANTS IN BED AS SHOWN, SPACING AS SPECIFIED IN PLANT SCHEDULE.
2. GROUNDCOVER SHALL BE TRIANGULAR SPACED IN ROWS PARALLEL TO STRAIGHT EDGES AND SHALL BE EVENLY SPACED IN ROWS PARALLEL TO CURVE EDGES.

4 / L-3 GROUND COVER SPACING DETAIL
SCALE: NTS

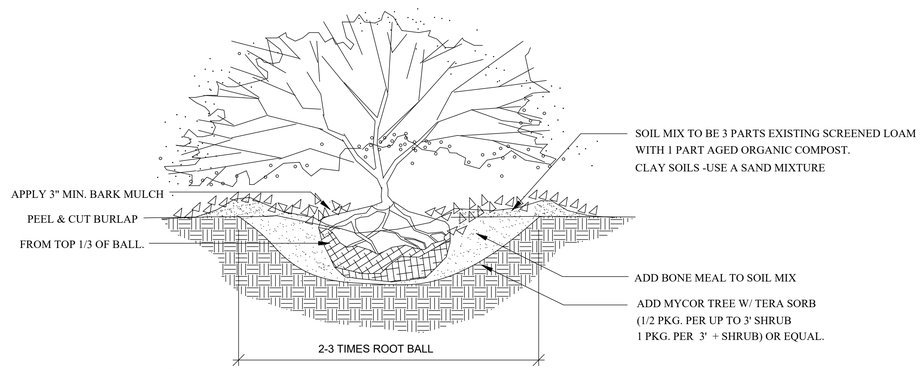

3 / L-3 B&B SHRUB PLANTING
SCALE: NTS

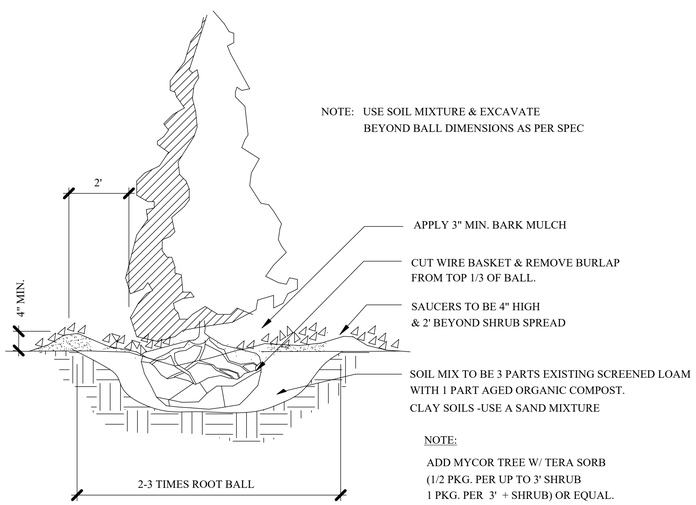

2 / L-3 PYRAMIDAL EVERGREEN TREE PLANTING
SCALE: NTS

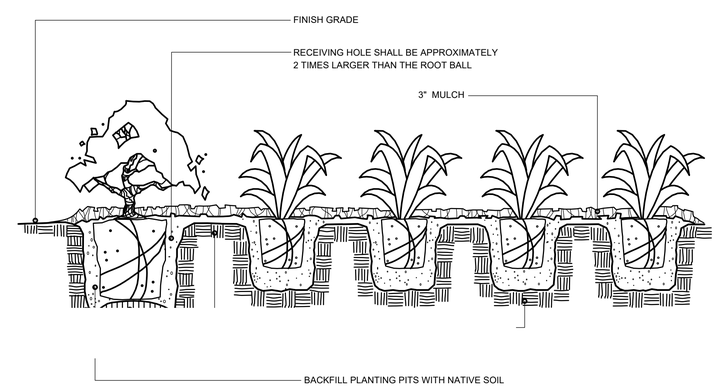

NOTE: SHRUBS SHALL BE PLANTED A MINIMUM OF 1" & NO MORE THAN 2" ABOVE FINISH GRADE, DEPENDING UPON SITE CONDITIONS.

5 / L-3 SHRUB/GROUND COVER PLANTING DETAIL
SCALE: NTS

PLEASE NOTE: THIS SHEET IS SCALED FOR 22 BY 34 PAPER, DO NOT REDUCE OR ENLARGE.

terra firma
landscape architecture
163.a court street | portsmouth, nh 03801
office 603.430.8388 | terrence@terrafirmalandarch.com

No.	Date	By	Revision Notes

No.	Date	Issue Notes
F	10/11/2024	PLANTING UPDATE
E	9/30/2024	CATENARY LIGHT ADJUSTMENT
D	8/12/2024	SITE AMENTITIES AND MATERIALS UPDATED
C	8/2/2024	ALLEY DOOR LOCATION UPDATES
B	7/31/2024	SHEET UPDATES
A	7/24/2024	SOUTH ALLEY UPDATES

Design Firm: terra firma landscape architecture
163.a Court Street
Portsmouth, NH 03801

Consultant:

Project Title: NEWBERRY WAY

Sheet Title: LANDSCAPE DETAILS

Project Manager	Project ID: NEWBERRY WAY
Drawn By: TC	Scale: AS NOTED
Reviewed By: TP	Sheet No. L-03
Date: 1/11/2023	of 1
CAD File Name: newberry101025.vwx	

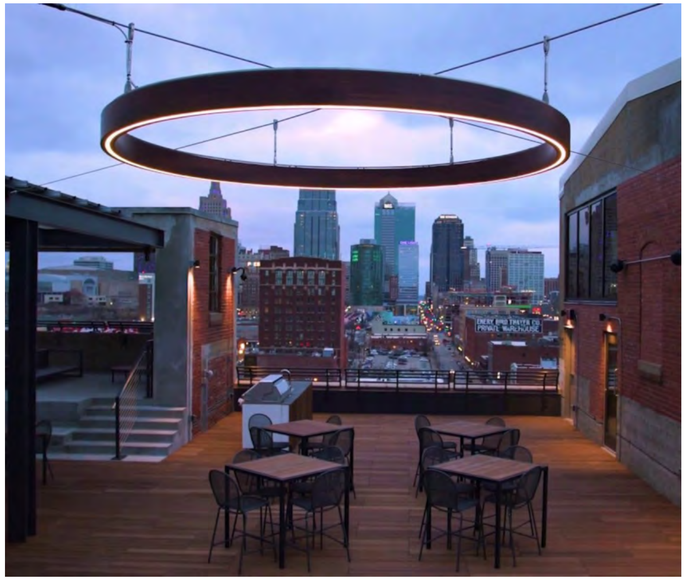

STRUCTURA
9635 Widmer Rd.
Lenexa, KS 66215
projects@structura.com
(913) 390-8787
https://structura.com/

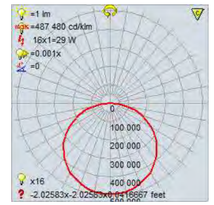

2' DIA. SINGLE LAMP PHOTOMETRIC

Volta OR EQUAL

structura

Catenary Cable Installation Instructions

Warnings

CAUTION—risk of fire and this product must be installed in accordance with the applicable installation code by a person familiar with the construction and operation of the product and the hazards involved.

Suitable for wet locations.

Mounting orientation must have light source facing down.

Electrical service must be disconnected during installation.

Proper grounding is required to protect against shock and proper operation.

Tools Required

9/64" Allen wrench for 8-32 socket cap screws.
7/16" wrench for jam nuts and coupling nuts.
4' level

Installation

Step 1: Install exterior power supply at remote location up to 40' away.

Step 2: Place clamp assembly in the top of the ring with the carriage bolt in the built-in fixture track. Slide assembly to approximate mounting location.

Step 3: Mount fixture to cables in approximate desired location by placing the cable clamp around the catenary cable. Position power cable from luminaire to nearest point of power supply along steel cable.

Step 4: Move fixture to final desired position. Ensure that clamp arm is perpendicular to cable and fixture. Fully tighten coupling nut and cable clamp screws to torque spec of 8ft-lbs.

Step 5: Adjust turnbuckles to level the fixture horizontally. Turnbuckles have 3" of adjustment length.

Step 6: Tighten jam nuts to secure turnbuckles using 7/16" wrench and metal pin through turnbuckle. Tighten jam nuts to 8ft-lbs.

Step 7: Connect exterior connector from fixture to wire whip. Connect whip to 24V side of power supply. Secure wire to cable with standard cable ties.

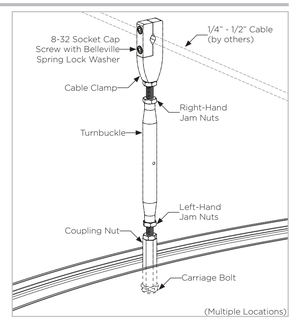

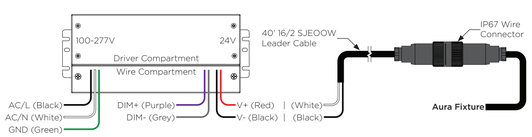

Suitable for indoor or outdoor use. Horizontal or vertical mounting. End and side knockout locations of 7/8" (1/2" trade size"). When installing multiple power supplies, separate the enclosures by at least 3" of space from edge to edge to prevent a rise of ambient temperature between the power supplies.

Structura, Inc. | 9635 Widmer Rd., Lenexa, KS 66215 | 913.390.8787 | www.structura.com

DESIGN INFORMATION

When designing catenary systems, each site has unique information that needs to be provided to ensure the proper sizing of the system components. The below information needs to be supplied before we can begin preliminary engineering or the quoting process.

Critical Information

- All span lengths (B)
- Cable sag (if greater than 5%) (C)
- Minimum fixture height (D)
- Cable angles (E)
- Luminaire center location from the pole (Fx)
- Spec of Structura luminaires (size/shape) (G)
- Geographic location of installation for wind and ice loading
- Any additional loading (fixtures, elevation, etc).
- AutoCAD file is preferred
- Elevation (if above ground level)
- Weight/foot of string lights

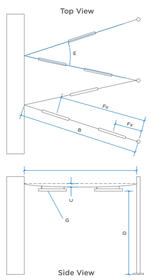

After all of the critical information is obtained by Structura:

1-2 Weeks:

- Preliminary Engineering – Approximate sizing for poles and cables without full analysis.
- Layout Drawings – Visual representation of Structura's interpretation of the critical information.
- Bill of Materials – List of what will and will not be provided by Structura.
- Budget Quote – Pricing for everything Structura will provide in the BOM as well as the Engineering Fee.

After Engineering Fee is paid or Purchase Order placed:

3-4 Weeks:

- Final Engineering – Post-analysis sizing for cables and poles. Includes reaction forces. PRICING AND SIZING ARE SUBJECT TO CHANGE UNTIL FINAL ENGINEERING IS COMPLETED.
- Final Quote – Pricing for everything Structura will provide based on Final Engineering.
- Approval Drawings – Layout, pole, and/or luminaire drawings that must be approved and reviewed prior to release.

After Approval Drawings are returned and deposit (50% of order) is received:

< 1 Week:

- Production – Structura can begin production for all ordered materials.
- Cables – 2-4 Weeks
- Luminaires – 8-10 Weeks
- Poles – 10+ Weeks (Depends on size, quantity, shop capacity, etc.)

Volta Ring - Direct Lighting

structura

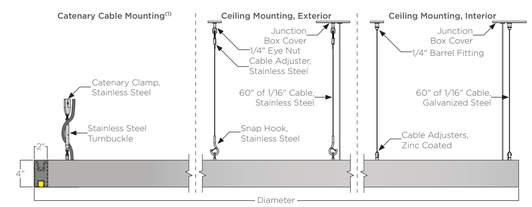

	Standard Output		Medium Output		High Output			
Dia.	Lumens(2)	Watts	Lumens(2)	Watts	Lumens(2)	Watts	Weight(3)	EPA(3)
2'	627	9	1139	18	1593	29	16lbs.	.69ft²
4'	1299	18	2360	36	3301	60	32lbs.	1.24ft²
6'	1980	28	3597	55	5032	91	49lbs.	1.81ft²
8'	2671	37	4851	74	6787	123	64lbs.	2.36ft²

Candela - Direct

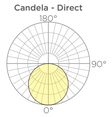

ORDERING GUIDE: EXAMPLE: VOLTA-RNG-D-6-L27MO-S14-CA-STD

Wet Location C US

VOLTA	RNG	D	2	L30 HO	JET BLACK	CA	STD
1	2	3	4	5	6	7	8	9

1	**Series**	4	**Diameter(4)**	6	**Output**	8	**Mounting**
VOLTA	Volta	**2**	2'	**SO**	Standard Output	**CA**	Catenary Cable
		4	4'	**MO**	Medium Output	**CE/E**	Ceiling Canopy, Exterior
2	**Series**	**6**	6'	**HO**	High Output	**CE/I**	Ceiling Canopy, Interior
RNG	Ring	**8**	8'				
				7	**Metal Finish**	9	**Special**
3	**Lighting**	5	**CCT**	**C***	See color options on finishes technical sheet	**STD**	Standard
D	Direct	**L27**	2700K			**MOD**	Modified
		L30	3000K	**CSM**	Custom Color		
		L35	3500K				
		L40	4000K				

1. Catenary cable designed and provided separately.
2. Lumen output based upon 3000K CCT.
3. Weight and EPA based off of catenary mounting option.
4. Consult factory for sizes above 8'.

Product specification sheets subject to change.

©2022 STRUCTURA, INC.

1
L-4

CATENARY LIGHT DETAIL
SCALE: NTS

NOTE: CONSULT MANUFACTURER'S DESIGN SPECIALISTS AND INSTALL ACCORDING TO MANUFACTURER'S INSTRUCTIONS.

PLEASE NOTE: THIS SHEET IS SCALED FOR 22 BY 34 PAPER, DO NOT REDUCE OR ENLARGE. .

terra firma
landscape architecture
163.a court street · portsmouth, nh 03801
office 603.430.8388 | terrence@terrafirmalandarch.com

No.	Date	By	Revision Notes
F	10/11/2024		PLANTING UPDATE
E	9/30/2024		CATENARY LIGHT ADJUSTMENT
D	8/12/2024		SITE AMENTITIES AND MATERIALS UPDATED
C	8/2/2024		ALLEY DOOR LOCATION UPDATES
B	7/31/2024		SHEET UPDATES
A	7/24/2024		SOUTH ALLEY UPDATES

No.	Date	Issue Notes

Design Firm
terra firma landscape architecture
163.a Court Street
Portsmouth, NH 03801

Consultant

Project Title
NEWBERRY WAY

Sheet Title
LANDSCAPE DETAILS

Project Manager	Project ID NEWBERRY WAY
Drawn By TC	Scale AS NOTED
Reviewed By TP	Sheet No. L-04
Date 1/11/2023	of 1
CAD File Name newberry101025.vwx	

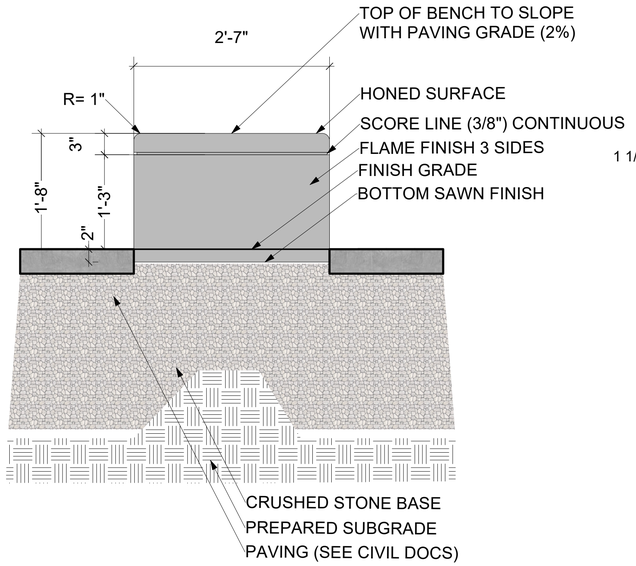

1
L-5

SITTING STONES DETAIL
SCALE: 1"=1'-0"

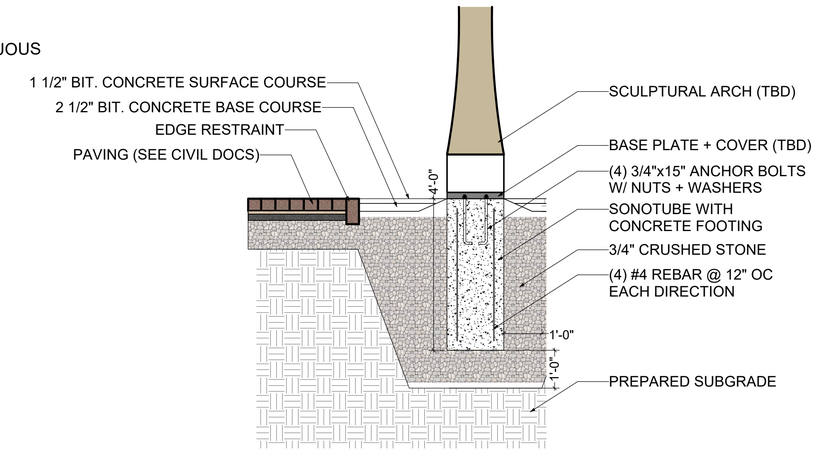

2
L-5

LIGHT POST ARCH FOOTING DETAIL
SCALE: 1/2" = 1'-0"

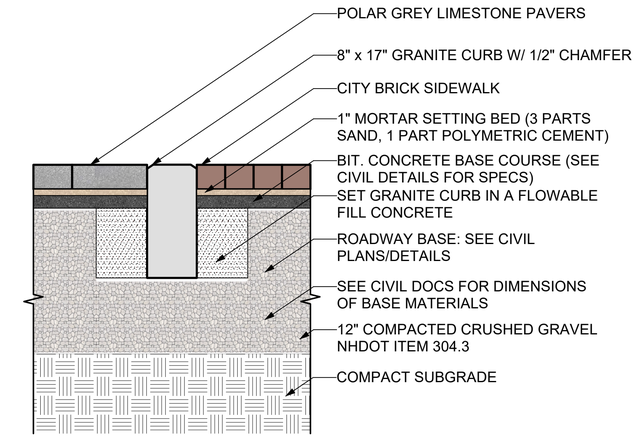

3
L-5

LADD + HIGH STREET PAVING DETAIL
SCALE: 1"=1'-0"

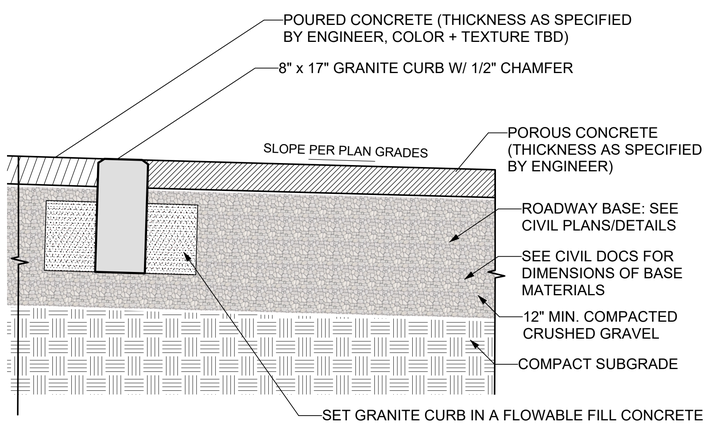

NOTE: CONTRACTOR SHALL SUBMIT SIEVE ANALYSIS FOR EACH COURSE MATERIAL
TO PROJECT LANDSCAPE ARCHITECT FOR APPROVAL PRIOR TO PLACEMENT.

4
L-5

POROUS CONCRETE DETAIL
SCALE: 1"=1'-0"

PLEASE NOTE: THIS SHEET IS SCALED FOR 22 BY 34 PAPER, DO NOT REDUCE OR ENLARGE. .

terra firma
landscape architecture
163.a court street · portsmouth, nh 03801
office 603.430.8388 | terrence@terrafirmalandarch.com

No.	Date	By	Revision Notes

No.	Date	Issue Notes
F	10/11/2024	PLANTING UPDATE
E	9/30/2024	CATENARY LIGHT ADJUSTMENT
D	8/12/2024	SITE AMENTITIES AND MATERIALS UPDATED
C	8/2/2024	ALLEY DOOR LOCATION UPDATES
B	7/31/2024	SHEET UPDATES
A	7/24/2024	SOUTH ALLEY UPDATES

Design Firm: terra firma landscape architecture
163.a Court Street
Portsmouth, NH 03801

Consultant:

Project Title: NEWBERRY WAY

Sheet Title: LANDSCAPE DETAILS

Project Manager	Project ID: NEWBERRY WAY
Drawn By: TC	Scale: AS NOTED
Reviewed By: TP	Sheet No: L-05
Date: 1/11/2023	of
CAD File Name: newberry101025.vwx	1

EROSION CONTROL NOTES

CONSTRUCTION SEQUENCE

DO NOT BEGIN CONSTRUCTION UNTIL ALL LOCAL, STATE AND FEDERAL PERMITS HAVE BEEN APPLIED FOR AND RECEIVED.

IF REQUIRED THE CONTRACTOR SHALL OBTAIN AN NPDES PHASE II STORMWATER PERMIT AND SUBMIT A NOTICE OF INTENT (N.O.I) BEFORE BEGINNING CONSTRUCTION AND SHALL HAVE ON SITE A STORMWATER POLLUTION PREVENTION PLAN (S.W.P.P.P.) AVAILABLE FOR INSPECTION BY THE PERMITTING AUTHORITY DURING THE CONSTRUCTION. THE CONTRACTOR SHALL BE RESPONSIBLE FOR CARRYING OUT THE S.W.P.P.P. AND INSPECTING AND MAINTAINING ALL BMP'S CALLED FOR BY THE PLAN. THE CONTRACTOR SHALL SUBMIT A NOTICE OF TERMINATION (N.O.T.) FORM TO THE REGIONAL EPA OFFICE WITHIN 30 DAYS OF FINAL STABILIZATION OF THE ENTIRE SITE OR TURNING OVER CONTROL OF THE SITE TO ANOTHER OPERATOR.

THE FOLLOWING REPRESENTS THE GENERAL OBSERVATION AND REPORTING PRACTICES THAT SHALL BE FOLLOWED AS PART OF THIS PROJECT:

1. OBSERVATIONS OF THE PROJECT FOR COMPLIANCE WITH THE SWPPP SHALL BE MADE BY THE CONTRACTOR AT LEAST ONCE A WEEK OR WITHIN 24 HOURS OF A STORM 0.25 INCHES OR GREATER;
2. AN OBSERVATION REPORT SHALL BE MADE AFTER EACH OBSERVATION AND DISTRIBUTED TO THE ENGINEER, THE OWNER, AND THE CONTRACTOR;
3. A REPRESENTATIVE OF THE SITE CONTRACTOR SHALL BE RESPONSIBLE FOR MAINTENANCE AND REPAIR ACTIVITIES;
4. IF A REPAIR IS NECESSARY, IT SHALL BE INITIATED WITHIN 24 HOURS OF REPORT.

INSTALL PERIMETER CONTROLS, i.e., SILTSOXX AND CATCH BASIN PROTECTION AROUND THE LIMITS OF DISTURBANCE BEFORE ANY EARTH MOVING OPERATIONS. THE USE OF HAYBALES IS NOT ALLOWED.

THE CONTRACTOR SHALL CONSTRUCT STABILIZED CONSTRUCTION ENTRANCE(S) PRIOR TO ANY EXCAVATION ACTIVITIES. PLACE FODS AS NEEDED.

CUT AND GRUB ALL TREES, SHRUBS, SAPLINGS, BRUSH, VINES AND REMOVE OTHER DEBRIS AND RUBBISH AS REQUIRED. DEMOLISH BUILDINGS AND FENCES AS NEEDED. REMOVE WALL AND STORE.

ROUGH GRADE SITE.

LAYOUT AND INSTALL ALL BURIED UTILITIES AND SERVICES UP TO 10' OF THE PROPOSED BUILDING FOUNDATIONS. CAP AND MARK TERMINATIONS OR LOG SWING TIES.

CONSTRUCT BUILDING.

CONNECT UTILITIES.

PLACE BINDER LAYER OF PAVEMENT FOR SIDEWALKS.

PLANT LANDSCAPING IN AREAS OUT OF WAY OF BUILDING CONSTRUCTION. PREPARE AND STABILIZE FINAL SITE GRADING BY ADDING TOPSOIL, SEED, MULCH AND FERTILIZER.

AFTER BUILDINGS ARE COMPLETED, FINISH ALL REMAINING LANDSCAPED WORK.

CONSTRUCT SIDEWALKS.

REMOVE TRAPPED SEDIMENTS FROM COLLECTION DEVICES AS APPROPRIATE, AND THEN REMOVE TEMPORARY EROSION CONTROL MEASURES UPON COMPLETION OF FINAL STABILIZATION OF THE SITE.

PROJECT DESCRIPTION

THE PROJECT CONSISTS OF A BUILDING REDEVELOPMENT WITH ASSOCIATED UTILITIES AND PARKING.

THE TOTAL AREA TO BE DISTURBED IS APPROXIMATELY 0.620 ACRES.

BASED ON THE USCS WEB SOIL SURVEY THE SOILS ON SITE CONSIST OF URBAN LAND WHICH HAS AN UNSPECIFIED HYDROLOGIC SOIL GROUP RATING, ASSUMED D.

THE STORMWATER RUNOFF FROM THE SITE WILL BE DISCHARGED VIA A CLOSED DRAINAGE SYSTEM TO THE CITY OF PORTSMOUTH CLOSED DRAINAGE SYSTEM WHICH ULTIMATELY FLOWS TO THE PISCATAQUA RIVER.

GENERAL CONSTRUCTION NOTES

THE EROSION CONTROL PROCEDURES SHALL CONFORM TO SECTION 645 OF THE "STANDARD SPECIFICATION FOR ROAD AND BRIDGE CONSTRUCTION" OF THE NHDOT, AND "STORM WATER MANAGEMENT AND EROSION AND SEDIMENT CONTROL HANDBOOK FOR URBAN AND DEVELOPING AREAS IN NEW HAMPSHIRE". THE PROJECT IS TO BE MANAGED IN A MANNER THAT MEETS THE REQUIREMENTS AND INTENT OF RSA 430:53 AND CHAPTER AGR 3800 RELATIVE TO INVASIVE SPECIES.

DURING CONSTRUCTION AND THEREAFTER, EROSION CONTROL MEASURES ARE TO BE IMPLEMENTED AS NOTED. THE SMALLEST PRACTICAL AREA OF LAND SHOULD BE EXPOSED AT ANY ONE TIME DURING DEVELOPMENT. NO DISTURBED AREA SHALL BE LEFT UNSTABILIZED FOR MORE THAN 45 DAYS.

ANY DISTURBED AREAS WHICH ARE TO BE LEFT TEMPORARILY, AND WHICH WILL BE REGRADED LATER DURING CONSTRUCTION SHALL BE MACHINE HAY MULCHED AND SEEDED WITH RYE GRASS TO PREVENT EROSION.

THE PROJECT IS TO BE MANAGED IN A MANNER THAT MEETS THE REQUIREMENTS AND INTENT OF RSA 430:53 AND CHAPTER AGR 3800 RELATIVE TO INVASIVE SPECIES.

DUST CONTROL: DUST CONTROL MEASURES SHALL INCLUDE BUT ARE NOT LIMITED TO SPRINKLING WATER ON EXPOSED AREAS, COVERING LOADED DUMP TRUCKS LEAVING THE SITE, AND TEMPORARY MULCHING.
DUST CONTROL MEASURES SHALL BE UTILIZED SO AS TO PREVENT THE MIGRATION OF DUST FROM THE SITE TO ABUTTING AREAS.
IF TEMPORARY STABILIZATION PRACTICES, SUCH AS TEMPORARY VEGETATION AND MULCHING, DO NOT ADEQUATELY REDUCE DUST GENERATION, APPLICATION OF WATER OR CALCIUM CHLORIDE SHALL BE APPLIED IN ACCORDANCE WITH BEST MANAGEMENT PRACTICES.

SILTSOXX SHALL BE PERIODICALLY INSPECTED DURING THE LIFE OF THE PROJECT AND AFTER EACH STORM. ALL DAMAGED SILTSOXX SHALL BE REPAIRED. SEDIMENT DEPOSITS SHALL PERIODICALLY BE REMOVED AND DISPOSED IN A SECURED LOCATION.

ALL FILLS SHALL BE PLACED AND COMPACTED TO REDUCE EROSION, SLIPPAGE, SETTLEMENT, SUBSIDENCE OR OTHER RELATED PROBLEMS.

ALL NON-STRUCTURAL, SITE-FILL SHALL BE PLACED AND COMPACTED TO 90% MODIFIED PROCTOR DENSITY IN LAYERS NOT EXCEEDING 18 INCHES IN THICKNESS UNLESS OTHERWISE NOTED.

FROZEN MATERIAL OR SOFT, MUCKY OR HIGHLY COMPRESSIBLE MATERIAL, TRASH, WOODY DEBRIS, LEAVES, BRUSH OR ANY DELETERIOUS MATTER SHALL NOT BE INCORPORATED INTO FILLS.

FILL MATERIAL SHALL NOT BE PLACED ON FROZEN FOUNDATION SUBGRADE.

DURING CONSTRUCTION AND UNTIL ALL DEVELOPED AREAS ARE FULLY STABILIZED, ALL EROSION CONTROL MEASURES SHALL BE INSPECTED WEEKLY AND AFTER EACH ONE HALF INCH OF RAINFALL.

THE CONTRACTOR SHALL MODIFY OR ADD EROSION CONTROL MEASURES AS NECESSARY TO ACCOMMODATE PROJECT CONSTRUCTION.

ALL ROADWAYS AND PARKING AREAS SHALL BE STABILIZED WITHIN 72 HOURS OF ACHIEVING FINISHED GRADE. ALL CUT AND FILL SLOPES SHALL BE SEEDED/LOAMED WITHIN 72 HOURS OF ACHIEVING FINISHED GRADE.

AN AREA SHALL BE CONSIDERED STABLE IF ONE OF THE FOLLOWING HAS OCCURRED:

- BASE COURSE GRAVELS HAVE BEEN INSTALLED ON AREAS TO BE PAVED
- A MINIMUM OF 85% VEGETATED GROWTH HAS BEEN ESTABLISHED
- A MINIMUM OF 3 INCHES OF NON-EROSIVE MATERIAL SUCH AS STONE OR RIPRAP HAS BEEN INSTALLED
- EROSION CONTROL BLANKETS HAVE BEEN INSTALLED.
- IN AREAS TO BE PAVED, "STABLE" MEANS THAT BASE COURSE GRAVELS MEETING THE REQUIREMENTS OF NHDOT STANDARD FOR ROAD AND BRIDGE CONSTRUCTION, 2016, ITEM 304.2 HAVE BEEN INSTALLED.

STABILIZATION SHALL BE INITIATED ON ALL LOAM STOCKPILES, AND DISTURBED AREAS, WHERE CONSTRUCTION ACTIVITY SHALL NOT OCCUR FOR MORE THAN TWENTY-ONE (21) CALENDAR DAYS BY THE FOURTEENTH (14TH) DAY AFTER CONSTRUCTION ACTIVITY HAS PERMANENTLY OR TEMPORARILY CEASED IN THAT AREA.

STABILIZATION MEASURES TO BE USED INCLUDE:

- TEMPORARY SEEDING;
- MULCHING.

1. ALL AREAS SHALL BE STABILIZED WITHIN 45 DAYS OF INITIAL DISTURBANCE.
2. WHEN CONSTRUCTION ACTIVITY PERMANENTLY OR TEMPORARILY CEASES WITHIN 100 FEET OF NEARBY SURFACE WATERS OR DELINEATED WETLANDS, THE AREA SHALL BE STABILIZED WITHIN SEVEN (7) DAYS OR PRIOR TO A RAIN EVENT. ONCE CONSTRUCTION ACTIVITY CEASES PERMANENTLY IN THESE AREAS, SILTSOXX, MULCH BERMS, HAY BALE BARRIERS AND ANY EARTH/DIKES SHALL BE REMOVED ONCE PERMANENT MEASURES ARE ESTABLISHED.
3. DURING CONSTRUCTION, RUNOFF WILL BE DIVERTED AROUND THE SITE WITH EARTH DIKES, PIPING OR STABILIZED CHANNELS WHERE POSSIBLE. SHEET RUNOFF FROM THE SITE WILL BE FILTERED THROUGH SILTSOXX, MULCH BERMS, HAY BALE BARRIERS, OR SILT SOCKS. ALL STORM DRAIN BASIN INLETS SHALL BE PROVIDED WITH FLARED END SECTIONS AND TRASH RACKS. THE SITE SHALL BE STABILIZED FOR THE WINTER BY OCTOBER 15.

MAINTENANCE AND PROTECTION

THE SILTSOXX BARRIER SHALL BE CHECKED AFTER EACH RAINFALL AND AT LEAST DAILY DURING PROLONGED RAINFALL.

SILTSOXX SHALL BE REMOVED ONCE SITE IS STABILIZED, AND DISTURBED AREAS RESULTING FROM SILTSOXX REMOVAL SHALL BE PERMANENTLY SEEDED.

THE CATCH BASIN INLET BASKET SHALL BE INSPECTED WITHIN 24 HOURS AFTER EACH RAINFALL OR DAILY DURING EXTENDED PERIODS OF PRECIPITATION. REPAIRS SHALL BE MADE IMMEDIATELY, AS NECESSARY, TO PREVENT PARTICLES FROM REACHING THE DRAINAGE SYSTEM AND/OR CAUSING SURFACE FLOODING. SEDIMENT DEPOSITS SHALL BE REMOVED AFTER EACH STORM EVENT, OR MORE OFTEN IF THE FABRIC BECOMES CLOGGED.

WINTER NOTES

ALL PROPOSED VEGETATED AREAS THAT DO NOT EXHIBIT A MINIMUM OF 85% VEGETATED GROWTH BY OCTOBER 15, OR WHICH ARE DISTURBED AFTER OCTOBER 15, SHALL BE STABILIZED BY SEEDING AND INSTALLING EROSION CONTROL BLANKETS ON SLOPES GREATER THAN 3:1, AND SEEDING AND PLACING 3 TO 4 TONS OF MULCH PER ACRE, SECURED WITH ANCHORED NETTING, ELSEWHERE. THE INSTALLATION OF EROSION CONTROL BLANKETS OR MULCH AND NETTING SHALL NOT OCCUR OVER ACCUMULATED SNOW OR ON FROZEN GROUND AND SHALL BE COMPLETED IN ADVANCE OF THAW OR SPRING MELT EVENTS.

ALL DITCHES OR SWALES WHICH DO NOT EXHIBIT A MINIMUM OF 85 PERCENT VEGETATIVE GROWTH BY OCTOBER 15, OR WHICH ARE DISTURBED AFTER OCTOBER 15, SHALL BE STABILIZED TEMPORARILY WITH STONE OR EROSION CONTROL BLANKETS APPROPRIATE FOR THE DESIGN FLOW CONDITIONS;

AFTER OCTOBER 15, INCOMPLETE ROAD OR PARKING SURFACES, WHERE WORK HAS STOPPED FOR THE WINTER SEASON, SHALL BE PROTECTED WITH A MINIMUM OF 3 INCHES OF CRUSHED GRAVEL PER NHDOT ITEM 304.3, OR IF CONSTRUCTION IS TO CONTINUE THROUGH THE WINTER SEASON BE CLEARED OF ANY ACCUMULATED SNOW AFTER EACH STORM EVENT;

STOCKPILES

1. LOCATE STOCKPILES A MINIMUM OF 50 FEET AWAY FROM CATCH BASINS, SWALES, AND CULVERTS.
2. ALL STOCKPILES SHOULD BE SURROUNDED WITH TEMPORARY EROSION CONTROL MEASURES PRIOR TO THE ONSET OF PRECIPITATION.
3. PERIMETER BARRIERS SHOULD BE MAINTAINED AT ALL TIMES, AND ADJUSTED AS NEEDED TO ACCOMMODATE THE DELIVERY AND REMOVAL OF MATERIALS FROM THE STOCKPILE. THE INTEGRITY OF THE BARRIER SHOULD BE INSPECTED AT THE END OF EACH WORKING DAY.
4. PROTECT ALL STOCKPILES FROM STORMWATER RUN-OFF USING TEMPORARY EROSION CONTROL MEASURES SUCH AS BERMS, SILT SOCK, OR OTHER APPROVED PRACTICE TO PREVENT MIGRATION OF MATERIAL BEYOND THE IMMEDIATE CONFINES OF THE STOCKPILES.

CONCRETE WASHOUT AREA

THE FOLLOWING ARE THE ONLY NON-STORMWATER DISCHARGES ALLOWED. ALL OTHER NON-STORMWATER DISCHARGES ARE PROHIBITED ON SITE:

1. THE CONCRETE DELIVERY TRUCKS SHALL, WHENEVER POSSIBLE, USE WASHOUT FACILITIES AT THEIR OWN PLANT OR DISPATCH FAILITY;
2. IF IT IS NECESSARY, SITE CONTRACTOR SHALL DESIGNATE SPECIFIC WASHOUT AREAS AND DESIGN FACILITIES TO HANDLE ANTICIPATED WASHOUT WATER;
3. CONTRACTOR SHALL LOCATE WASHOUT AREAS AT LEAST 150 FEET AWAY FROM STORM DRAINS, SWALES AND SURFACE WATERS OR DELINEATED WETLANDS;
4. INSPECT WASHOUT FACILITIES DAILY TO DETECT LEAKS OR TEARS AND TO IDENTIFY WHEN MATERIALS NEED TO BE REMOVED.

ALLOWABLE NON-STORMWATER DISCHARGES

1. FIRE-FIGHTING ACTIVITIES;
2. FIRE HYDRANT FLUSHING;
3. WATERS USED TO WASH VEHICLES WHERE DETERGENTS ARE NOT USED;
4. WATER USED TO CONTROL DUST;
5. POTABLE WATER INCLUDING UNCONTAMINATED WATER LINE FLUSHING;
6. ROUTINE EXTERNAL BUILDING WASH DOWN WHERE DETERGENTS ARE NOT USED;
7. PAVEMENT WASH WATERS WHERE DETERGENTS ARE NOT USED;
8. UNCONTAMINATED AIR CONDITIONING/COMPRESSOR CONDENSATION;
9. UNCONTAMINATED GROUND WATER OR SPRING WATER;
10. FOUNDATION OR FOOTING DRAINS WHICH ARE UNCONTAMINATED;
11. UNCONTAMINATED EXCAVATION DEWATERING;
12. LANDSCAPE IRRIGATION.

WASTE DISPOSAL

1. WASTE MATERIAL
   - ALL WASTE MATERIALS SHALL BE COLLECTED AND STORED IN SECURELY LIDDED RECEPTACLES. ALL TRASH AND CONSTRUCTION DEBRIS FROM THE SITE SHALL BE DEPOSITED IN A DUMPSTER;
   - NO CONSTRUCTION WASTE MATERIALS SHALL BE BURIED ON SITE;
   - ALL PERSONNEL SHALL BE INSTRUCTED REGARDING THE CORRECT PROCEDURE FOR WASTE DISPOSAL BY THE SUPERINTENDENT.
2. HAZARDOUS WASTE
   - ALL HAZARDOUS WASTE MATERIALS SHALL BE DISPOSED OF IN THE MANNER SPECIFIED BY LOCAL OR STATE REGULATION OR BY THE MANUFACTURER;
   - SITE PERSONNEL SHALL BE INSTRUCTED IN THESE PRACTICES BY THE SUPERINTENDENT.
3. SANITARY WASTE
   - ALL SANITARY WASTE SHALL BE COLLECTED FROM THE PORTABLE UNITS A MINIMUM OF ONCE PER WEEK BY A LICENSED SANITARY WASTE MANAGEMENT CONTRACTOR.

BLASTING NOTES

CONTRACTOR SHALL CONTACT THE NHDES AND/OR LOCAL JURISDICTION PRIOR TO COMMENCING ANY BLASTING ACTIVITIES.
FOR ANY PROJECT FOR WHICH BLASTING OF BEDROCK IS ANTICIPATED, THE APPLICANT SHALL SUBMIT A BLASTING PLAN THAT IDENTIFIES:

- WHERE THE BLASTING ACTIVITIES ARE ANTICIPATED TO OCCUR;
- THE ESTIMATED QUANTITY OF BLAST ROCK IN CUBIC YARDS; AND
- SITE-SPECIFIC BLASTING BEST MANAGEMENT PRACTICES.

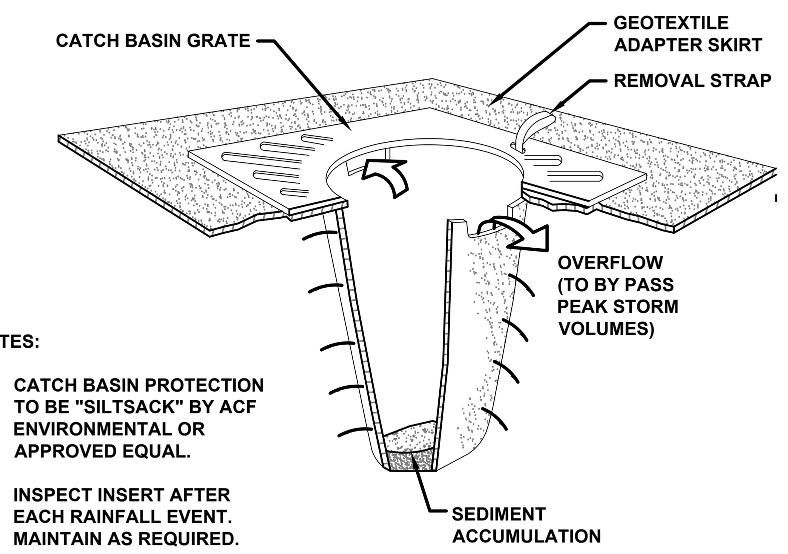

NOTES:

1. CATCH BASIN PROTECTION TO BE "SILTSACK" BY ACF ENVIRONMENTAL OR APPROVED EQUAL.
2. INSPECT INSERT AFTER EACH RAINFALL EVENT. MAINTAIN AS REQUIRED.
3. SEDIMENT WITHIN INSERT SHALL BE EMPTIED WHEN 1/2 FULL.

SEDIMENT SACK INLET PROTECTION DETAIL

NTS

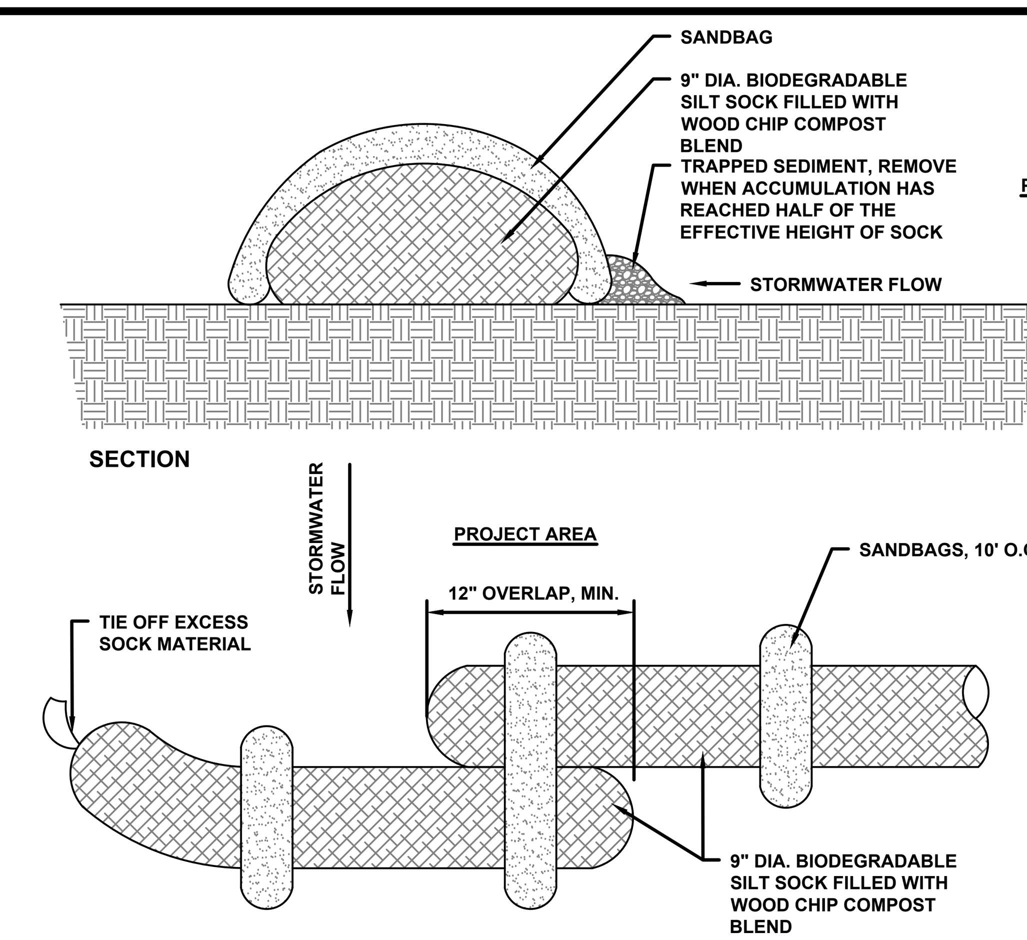

SILT SOCK DETAIL

SLOTDRAIN

9000 SERIES SLOT DRAIN®
SPECIFICATION SHEET

SPECIFICATIONS

GENERAL:
The surface drainage system shall be 9000 Series Slot Drain complete with slotted linear trench opening as manufactured by Slot Drain Systems.

MATERIALS:
T304 Stainless Steel, T316 Stainless Steel, Galvanized Steel, Fiberglass

DESIGN OPTIONS:
Slot Opening (#): ½" (0), 1" (1), 1 ¼" (5)
End (*): Open (0), End Cap (1), Flush Nipple (5)
Section Lengths: Full 9'8", Half 4'10"
Typical runs start with 102 or 102B (Half Section).

LOAD CLASS:
Load Class F (10,000 lbs.)

FLOW RATE:
½" 11 gpm (per foot of drain)
1 18 gpm (per foot of drain)
1 ¼" 27 gpm (per foot of drain)

ACCESSORIES:
Cleaning paddle, Cleaning Brush, Flush Flo, CIP

INSTALLATION:
The 9000 Series Slot Drain System shall be installed in accordance with the manufacturer's installation instructions and recommendations.

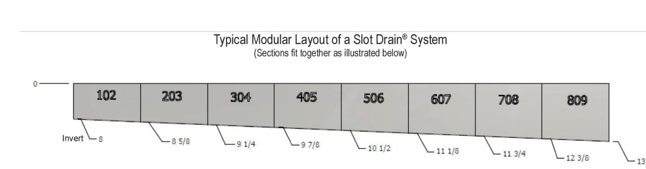

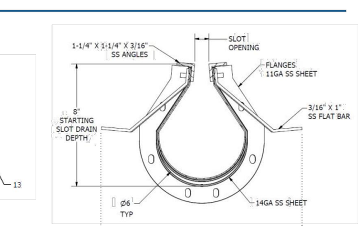

DRAIN CHANNELS

DESCRIPTION	PART NO.	INVERT SHALLOW INCHES	INVERT SHALLOW MM	INVERT DEEP INCHES	INVERT DEEP MM
9000 SERIES SS SLOT 102 HALF	SD95#*-102B	8 5/16	211.137	8 5/8	219.075
9000 SERIES SS SLOT 102	SD95#*-102	8	203.2	8 5/8	219.075
9000 SERIES SS SLOT 203	SD95#*-203	8 5/8	219.075	9 1/4	234.95
9000 SERIES SS SLOT 304	SD95#*-304	9 1/4	234.95	9 7/8	250.825
9000 SERIES SS SLOT 405	SD95#*-405	9 7/8	250.825	10 1/2	266.7
9000 SERIES SS SLOT 505 N	SD95#*-505B	10 1/2	266.7	10 1/2	266.7
9000 SERIES SS SLOT 506	SD95#*-506	10 1/2	266.7	11 1/8	282.575
9000 SERIES SS SLOT 607	SD95#*-607	11 1/8	282.575	11 3/4	298.45
9000 SERIES SS SLOT 708	SD95#*-708	11 3/4	298.45	12 3/8	314.325
9000 SERIES SS SLOT 809	SD95#*-809	12 3/8	314.325	13	330.2
9000 SERIES 90° SS SLOT	-	-	-	-	-
9000 SERIES SS TRANSITION PIT	-	-	-	-	-
	-	-	-	-	-

CATCH BASIN

DESCRIPTION	TOP WIDTH INCHES	TOP WIDTH MM	TOP LENGTH INCHES	TOP LENGTH MM	BOTTOM WIDTH INCHES	BOTTOM WIDTH MM	BOTTOM LENGTH INCHES	BOTTOM LENGTH MM	HEIGHT INCHES	HEIGHT MM	OUTLET HEIGHT INCHES	OUTLET HEIGHT MM	EDGE OF FRAME INCHES	EDGE OF FRAME MM
9000 SS CB	13	304.8	13	304.8	13	304.8	13	304.8	20 1/4	508	4 or 6	101.6 - 152.4	15	381

SPECIFYING ENGINEER IS RESPONSIBLE FOR CONCRETE ENCASEMENT AND REINFORCING BASED UPON APPLICATION AND LOCAL CODES.
SLOT DRAIN SYSTEMS RESERVES THE RIGHT TO CHANGE THE PRODUCT AND SPECIFICATIONS WITHOUT NOTICE

TF 855 . 497 . 7508 F 204 . 775 . 2324 E info@slotdrainsystems.com W slotdrainsystems.com

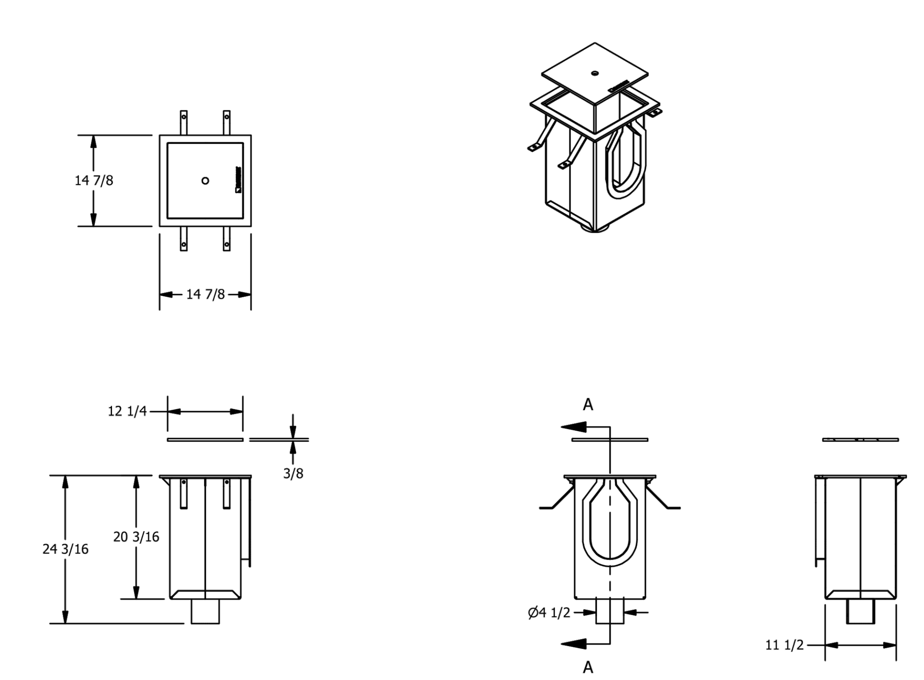

** All drawings are the exclusive property of SLOT DRAIN SYSTEMS,, any reproduction in part or in whole is prohibited without any proper consent.

REVISIONS:

SLOTDRAIN®

TITLE:	CATCH BASIN
PROJECT:	
JOB# / DATE: 3/2/2016 / DRAWN BY: ARIS / SHEET: 1 OF 1 / DWG#: SALES-SD9554-FGPIT	

SLOT DRAIN DETAILS

NTS

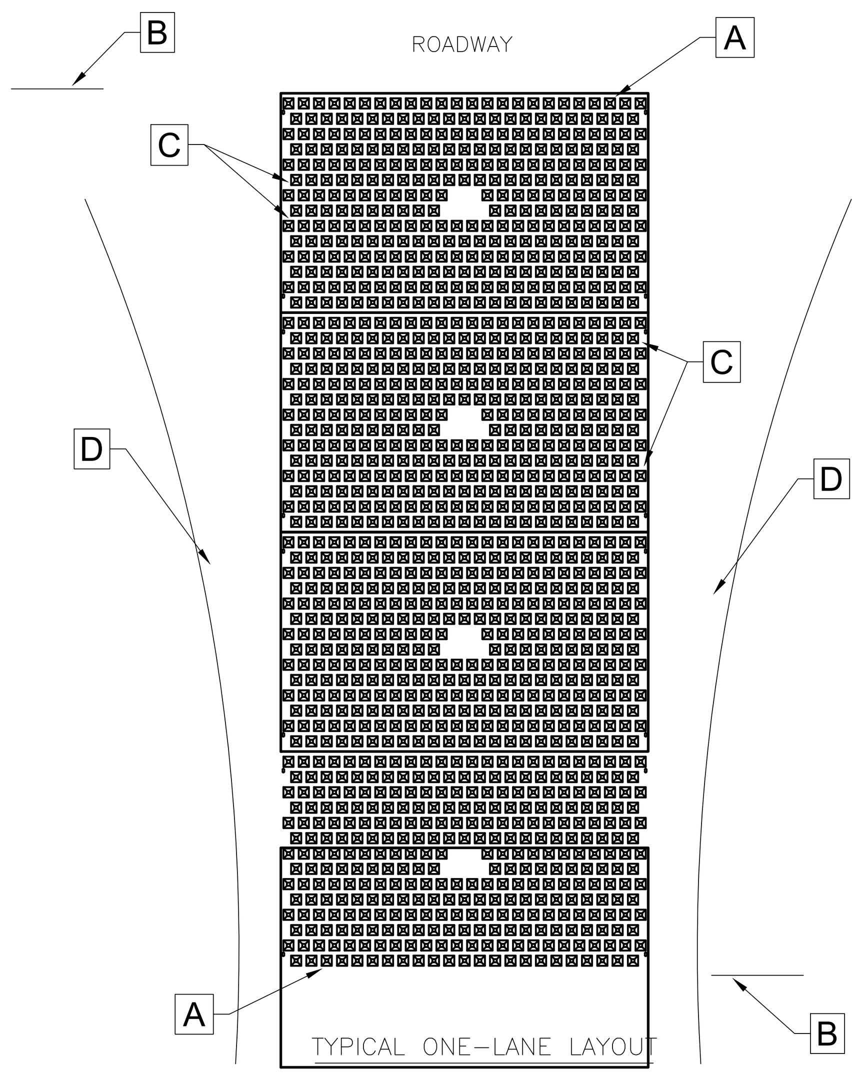

INSTALLATION:

THE PURPOSE AND DESIGN OF THE FODS TRACKOUT CONTROL SYSTEM IS TO EFFECTIVELY REMOVE MOST SEDIMENT FROM VEHICLE TIRES AS THEY EXIT A DISTURBED LAND AREA ONTO A PAVED STREET. THIS MANUAL IS A PLATFORM FROM WHICH TO INSTALL A FODS TRACKOUT CONTROL SYSTEM. (NOTE: THIS IS NOT A ONE SIZE FITS ALL GUIDE.) THE INSTALLATION MAY NEED TO BE MODIFIED TO MEET THE EXISTING CONDITIONS, EXPECTATIONS, OR DEMANDS OF A PARTICULAR SITE. THIS IS A GUIDELINE. ULTIMATELY THE FODS TRACKOUT CONTROL SYSTEM SHOULD BE INSTALLED SAFELY WITH PROPER ANCHORING AND SIGNS PLACED AT THE ENTRANCE AND EXIT TO CAUTION USERS AND OTHERS.

KEY NOTES:

A. FODS TRACKOUT CONTROL SYSTEM MAT.
B. FODS SAFETY SIGN.
C. ANCHOR POINT.
D. SILT OR ORANGE CONSTRUCTION FENCE.

INSTALLATION:

1. THE SITE WHERE THE FODS TRACKOUT CONTROL SYSTEM IS TO BE PLACED SHOULD CORRESPOND TO BEST MANAGEMENT PRACTICES AS MUCH AS POSSIBLE. THE SITE WHERE FODS TRACKOUT CONTROL SYSTEM IS PLACED SHOULD ALSO MEET OR EXCEED THE LOCAL JURISDICTION OR STORM WATER POLLUTION PREVENTION PLAN (SWPPP) REQUIREMENTS.
2. CALL FOR UTILITY LOCATES 3 BUSINESS DAYS IN ADVANCE OF THE OF FODS TRACKOUT CONTROL SYSTEM INSTALLATION FOR THE MARKING OF UNDERGROUND UTILITIES. CALL THE UTILITY NOTIFICATION CENTER AT 811.
3. ONCE THE SITE IS ESTABLISHED WHERE FODS TRACKOUT CONTROL SYSTEM IS TO BE PLACED, ANY EXCESSIVE UNEVEN TERRAIN SHOULD BE LEVELED OUT OR REMOVED SUCH AS LARGE ROCKS, LANDSCAPING MATERIALS, OR SUDDEN ABRUPT CHANGES IN ELEVATION.
4. THE INDIVIDUAL MATS CAN START TO BE PLACED INTO POSITION. THE FIRST MAT SHOULD BE PLACED NEXT TO THE CLOSEST POINT OF EGRESS. THIS WILL ENSURE THAT THE VEHICLE WILL EXIT STRAIGHT FROM THE SITE ONTO THE PAVED SURFACE.
8. AFTER THE FIRST MAT IS PLACED DOWN IN THE PROPER LOCATION, MATS SHOULD BE ANCHORED TO PREVENT THE POTENTIAL MOVEMENT WHILE THE ADJOINING MATS ARE INSTALLED. ANCHORS SHOULD BE PLACED AT EVERY ANCHOR POINT (IF FEASIBLE) TO HELP MAINTAIN THE MAT IN ITS CURRENT POSITION.
9. AFTER THE FIRST MAT IS ANCHORED IN ITS PROPER PLACE, AN H BRACKET SHOULD BE PLACED AT THE END OF THE FIRST MAT BEFORE ANOTHER MAT IS PLACED ADJACENT TO THE FIRST MAT.
10. ONCE THE SECOND MAT IS PLACED ADJACENT TO THE FIRST MAT, MAKE SURE THE H BRACKET IS CORRECTLY SITUATED BETWEEN THE TWO MATS, AND SLIDE MATS TOGETHER.
11. NEXT THE CONNECTOR STRAPS SHOULD BE INSTALLED TO CONNECT THE TWO MATS TOGETHER.
12. UPON PLACEMENT OF EACH NEW MAT IN THE SYSTEM, THAT MAT SHOULD BE ANCHORED AT EVERY ANCHOR POINT TO HELP STABILIZE THE MAT AND ENSURE THE SYSTEM IS CONTINUOUS WITH NO GAPS IN BETWEEN THE MATS.
13. SUCCESSIVE MATS CAN THEN BE PLACED TO CREATE THE FODS TRACKOUT CONTROL SYSTEM REPEATING THE ABOVE STEPS.

USE AND MAINTENANCE

1. VEHICLES SHOULD TRAVEL DOWN THE LENGTH OF THE TRACKOUT CONTROL SYSTEM AND NOT CUT ACROSS THE MATS.
2. DRIVERS SHOULD TURN THE WHEEL OF THEIR VEHICLES SUCH THAT THE VEHICLE WILL MAKE A SHALLOW S-TURN ROUTE DOWN THE LENGTH OF THE FODS TRACKOUT CONTROL SYSTEM.
3. MATS SHOULD BE CLEANED ONCE THE VOIDS BETWEEN THE PYRAMIDS BECOME FULL OF SEDIMENT. TYPICALLY THIS WILL NEED TO BE PERFORMED WITHIN TWO WEEKS AFTER A STORM EVENT. BRUSHING IS THE PREFERRED METHOD OF CLEANING, EITHER MANUALLY OR MECHANICALLY.
4. THE USE OF ICE MELT, ROCK SALT, SNOW MELT, DE-ICER, ETC. SHOULD BE UTILIZED AS NECESSARY DURING THE WINTER MONTHS AND AFTER A SNOW EVENT TO PREVENT ICE BUILDUP.

REMOVAL

1. REMOVAL OF FODS TRACKOUT CONTROL SYSTEM IS REVERSE ORDER OF INSTALLATION.
2. STARTING WITH THE LAST MAT, THE MAT THAT IS PLACED AT THE INNERMOST POINT OF THE SITE OR THE MAT FURTHEST FROM THE EXIT OR PAVED SURFACE SHOULD BE REMOVED FIRST.
3. THE ANCHORS SHOULD BE REMOVED.
4. THE CONNECTOR STRAPS SHOULD BE UNBOLTED AT ALL LOCATIONS IN THE FODS TRACKOUT CONTROL SYSTEM.
5. STARTING WITH THE LAST MAT IN THE SYSTEM, EACH SUCCESSIVE MAT SHOULD THEN BE MOVED AND STACKED FOR LOADING BY FORKLIFT OR EXCAVATOR ONTO A TRUCK FOR REMOVAL FROM THE SITE.

FODS SEDIMENT TRACKING SYSTEM DETAIL

NTS

REV.	DATE	DESCRIPTION	BY	CHK.
2	2024.11.18	ISSUED FOR SITE PLAN REVIEW	PJM	JRC
1	2024.11.05	ISSUED FOR COMMENTS	PJM	JRC

DRAWING ISSUE STATUS

PERMIT PLANS

HALEY WARD
ENGINEERING | ENVIRONMENTAL | SURVEYING
200 Griffin Rd. Unit 14
Portsmouth, New Hampshire 03801
603.430.9282
WWW.HALEYWARD.COM

PROJECT

MIXED USE DEVELOPMENT
1-15 CONGRESS STREET PORTSMOUTH, N.H.

TITLE

SITE DETAILS

STATE OF NEW HAMPSHIRE · JOHN R. CHAGNON No. 7651 · LICENSED · PROFESSIONAL ENGINEER

DATE	SCALE
JULY 2024	NTS

DRAWN BY	DESIGNED BY	CHECKED BY
PJM	---	JRC

PROJECT No. 5010156.3406

SHEET No. **C501** REV No. **2**

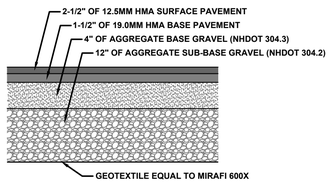

ROADWAY BUILDUP

TYPICAL ROADWAY BUILDUP DETAIL

NTS

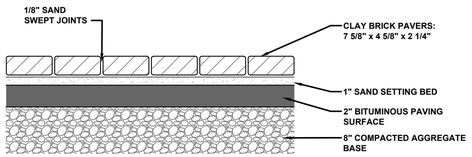

TYPICAL BRICK SIDEWALK DETAIL

NTS

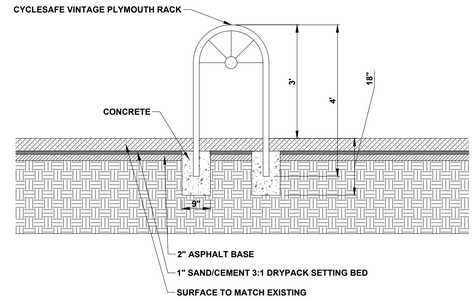

BIKE RACK DETAIL

NTS

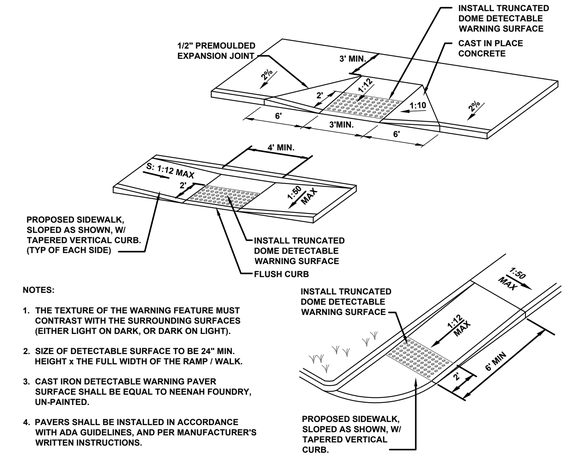

NOTES:

1. THE TEXTURE OF THE WARNING FEATURE MUST CONTRAST WITH THE SURROUNDING SURFACES (EITHER LIGHT ON DARK, OR DARK ON LIGHT).
2. SIZE OF DETECTABLE SURFACE TO BE 24" MIN. HEIGHT x THE FULL WIDTH OF THE RAMP / WALK.
3. CAST IRON DETECTABLE WARNING PAVER SURFACE SHALL BE EQUAL TO NEENAH FOUNDRY, UN-PAINTED.
4. PAVERS SHALL BE INSTALLED IN ACCORDANCE WITH ADA GUIDELINES, AND PER MANUFACTURER'S WRITTEN INSTRUCTIONS.

TYPICAL HANDICAP CURB RAMP DETAILS

NTS

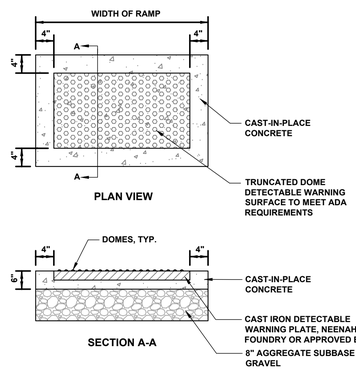

NOTES:

1. DETECTABLE WARNINGS SHALL BE AN INTEGRAL PART OF THE RAMP AND COMPLY WITH ALL SECTIONS OF THE ADA ACCESSIBILITY GUIDELINES AND ALL SECTIONS OF THE ADA STANDARDS FOR ACCESSIBLE DESIGN.
2. ALL DETECTABLE WARNING AREAS SHALL START 6-10" FROM THE FLOW LINE OF THE CURB, BE 24" IN DEPTH AND COVER THE COMPLETE WIDTH OF THE RAMP AREA ONLY. MATCH ROADWAY RADIUS, TYP.

TYPICAL DETECTABLE WARNING SURFACE DETAIL

NTS

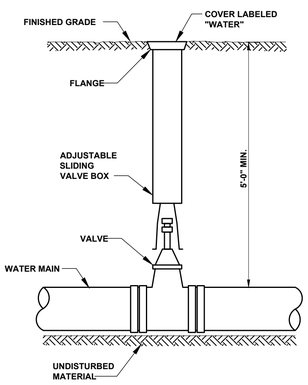

NOTES:
1. GATE VALVE TO BE LOCATED WITHIN ROADWAY PAVEMENT WHERE POSSIBLE.

2. PROPER SIZE VALVE BOX SHALL BE INSTALLED WHERE GATE VALVES ARE SHOWN ON PLANS.

TYPICAL VALVE AND BOX DETAIL

NTS

HORIZONTAL ANCHOR DIMENSIONS FOR PIPE INSTALLATION IN ROCK												
UP TO 150 P.S.I. WORKING PRESSURE												
PIPE SIZE	TEE OR TAP SLEEVE		90° BEND		45° BEND		22 1/2° BEND		11 1/4° BEND			
	H	L	H	L	H	L	H	L	H	L		
* 4"	0'-9"	1'-0"	0'-9"	1'-0"	0'-9"	1'-0"	0'-9"	1'-0"	0'-9"	1'-0"		
6"	0'-9"	1'-0"	0'-9"	1'-0"	0'-9"	1'-0"	0'-9"	1'-0"	0'-9"	1'-0"		
8"	1'-2"	1'-2"	1'-2"	1'-2"	1'-0"	1'-0"	0'-9"	1'-0"	0'-9"	1'-0"		
10"	1'-4"	1'-4"	1'-4"	1'-4"	1'-0"	1'-0"	0'-9"	1'-0"	0'-9"	1'-0'		
12"	1'-8"	1'-8"	1'-8"	1'-8"	1'-3"	1'-3"	1'-0"	1'-0"	0'-9"	1'-0"		

* - FOR 3" AND SMALLER PIPES

HORIZONTAL ANCHOR DIMENSIONS FOR AVERAGE SOIL CONDITIONS										
UP TO 150 P.S.I. WORKING PRESSURE										
PIPE SIZE	TEE OR TAP SLEEVE		90° BEND		45° BEND		22 1/2° BEND		11 1/4° BEND	
	H	L	H	L	H	L	H	L	H	L
* 4"	1'-0"	2'-0"	1'-0"	2'-0"	1'-0"	1'-4"	0'-9"	1'-0"	0'-6"	1'-0"
6"	1'-0"	2'-0"	1'-0"	2'-0"	1'-0"	1'-4"	0'-9"	1'-0"	0'-6"	1'-0"
8"	1'-4"	2'-8"	1'-4"	2'-8"	1'-4"	1'-6"	1'-0"	1'-0"	0'-9"	1'-0"
10"	1'-8"	3'-4"	1'-8"	3'-4"	1'-8"	2'-0"	1'-3"	1'-3"	1'-0"	1'-0'
12"	2'-0"	4'-0"	2'-0"	4'-0"	2'-0"	2'-2"	1'-6"	1'-6"	1'-3"	1'-3"

* - FOR 3" AND SMALLER PIPES

NOTES:
1) TABLES ARE BASED ON AN ALLOWABLE SOIL PRESSURE OF 3000 PSF ON UNDISTURBED EARTH BEHIND THE ANCHOR BLOCK. WHERE SOIL HAS BEEN DISTURBED BY ADJACENT EXCAVATIONS OR WHERE SOIL CANNOT WITHSTAND SUCH A PRESSURE, THE TABLE DOES NOT APPLY.

2) WHERE ENTIRE DEPTH OF PIPE IS BELOW THE TOP SURFACE OF SOUND ROCK, USE "HORIZONTAL ANCHOR DIMENSIONS FOR PIPE INSTALLATION IN ROCK" TABLE.

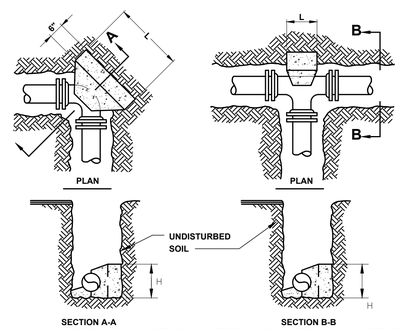

ALL HORIZONTAL BENDS TEE OR TAPPING SLEEVE

HORIZONTAL ANCHORING

VERTICAL ANCHOR DIMENSIONS															
UP TO 150 P.S.I. WORKING PRESSURE															
PIPE SIZE	45° BEND				22 1/2° BEND				11 1/4° BEND						
	DIMENSION			ROD DIA.	DIMENSION			ROD DIA.	DIMENSION			ROD DIA.			
	a	b	c		a	b	c		a	b	c				
4"	3'-0"	3'-0"	2'-0"	3/4"	2'-6"	2'-3"	1'-6"	3/4"	2'-0"	2'-0"	1'-6"				
6"	3'-0"	3'-0"	2'-0"	3/4"	2'-6"	2'-3"	1'-6"	3/4"	2'-0"	2'-0"	1'-6"	3/4"			
8"	3'-6"	3'-6"	2'-6"	3/4"	3'-0"	3'-0"	1'-9"	3/4"	2'-6"	2'-6"	1'-3"	3/4"			
10"	4'-3"	4'-0"	3'-0"	3/4"	3'-6"	3'-3"	2'-0"	3/4"	2'-9"	2'-9"	1'-6"	3/4"			
12"	4'-9"	4'-6"	3'-3"	3/4"	4'-0"	3'-9"	2'-6"	3/4"	3'-3"	3'-3"	1'-9"	3/4"			

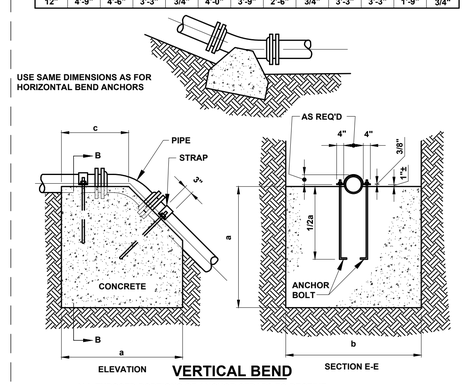

VERTICAL BEND

ALL EXPOSED PORTIONS OF ANCHOR STRAPS TO RECEIVE TWO FIELD COATS (MIN.) OF BITUMASTIC MATERIAL

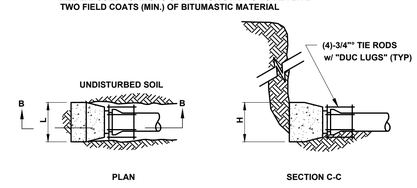

RESTRAINED PLUG OR CAP

NOTE: SEE CHART "HORIZONTAL ANCHOR DIMENSIONS" TIE RODS TO BE PROVIDED IN LIEU OF THRUST BLOCK

VERTICAL ANCHORING

NOTES:
1) THE CONTRACTOR SHALL NOTIFY DIG SAFE AT 1-888-DIG-SAFE (1-888-344-7233) AT LEAST 72 HOURS PRIOR TO COMMENCING ANY EXCAVATION ON PUBLIC OR PRIVATE PROPERTY.

2) UNDERGROUND UTILITY LOCATIONS ARE BASED UPON BEST AVAILABLE EVIDENCE AND ARE NOT FIELD VERIFIED. LOCATING AND PROTECTING ANY ABOVEGROUND OR UNDERGROUND UTILITIES IS THE SOLE RESPONSIBILITY OF THE CONTRACTOR AND/OR THE OWNER. UTILITY CONFLICTS SHOULD BE REPORTED AT ONCE TO THE DESIGN ENGINEER.

3) CONTRACTOR SHALL INSTALL AND MAINTAIN EROSION CONTROL MEASURES IN ACCORDANCE WITH THE "NEW HAMPSHIRE STORMWATER MANUAL, VOLUME 3, EROSION AND SEDIMENT CONTROLS DURING CONSTRUCTION. (NHDES DECEMBER 2008).

4) CATCH BASIN POLYETHYLENE LINER NOTES:

POLYETHYLENE LINER (ITEM 604.0007) SHALL BE FABRICATED AT THE SHOP. DOWNSPOUT SHALL BE EXTRUSION FILLET WELDED TO THE POLYETHYLENE SHEET.

PLACE A CONTINUOUS BEAD OF AN APPROVED SILICONE SEALANT (SUBSIDIARY TO ITEM 604.0007) BETWEEN FRAME AND POLYETHYLENE SHEET.

PLACE CLASS AA CONCRETE TO 2" BELOW THE TOP OF THE GRATE ELEVATION (SUBSIDIARY TO DRAINAGE STRUCTURE).

USE ON DRAINAGE STRUCTURES 4' MIN. DIAMETER ONLY.

TRIM POLYETHYLENE SHEET A MAXIMUM OF 4" OUTSIDE THE FLANGE ON THE FRAME FOR THE CATCH BASIN BEFORE PLACING CONCRETE (EXCEPT AS SHOWN WHEN USED WITH 3-FLANGE FRAME AND CURB).

THE CENTER OF THE GRATE & FRAME MAY BE SHIFTED A MAXIMUM OF 6" FROM THE CENTER OF THE DOWNSPOUT IN ANY DIRECTION.

PLACED ONLY IN DRAINAGE STRUCTURES IN PAVEMENT.

SEE NHDOT DR-04, "DI-DB, UNDERDRAIN FLUSHING BASIN AND POLYETHYLENE LINER DETAILS," FOR ADDITIONAL INFORMATION.

CATCHBASINS WITHIN CITY RIGHT OF WAY SHALL HAVE A POLYETHYLENE LINER.

5) ALL WATER MAIN & CONNECTIONS SHALL BE INSTALLED PER CITY OF PORTSMOUTH CONSTRUCTION STANDARDS.

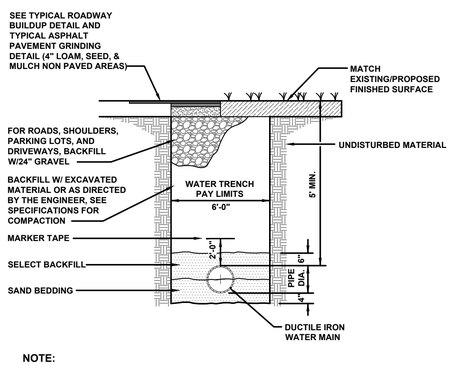

NOTE:

1. MATCH EXISTING SURFACE FINISH, EXCEPT WHERE NOTED. IN LAWN AREAS INSTALL 4" OF LOAM AND SEED AND MULCH.

TYPICAL TRENCH DETAIL - DUCTILE IRON WATER MAIN

NTS

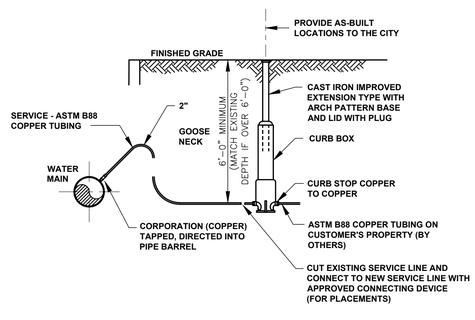

TYPICAL WATER SERVICE CONNECTION DETAIL

NTS

TYPICAL WATER MAIN ANCHORING DETAILS

NTS

REV.	DATE	DESCRIPTION	BY	CHK.
2	2024.11.18	ISSUED FOR SITE PLAN REVIEW	PJM	JRC
1	2024.11.05	ISSUED FOR COMMENTS	PJM	JRC

DRAWING ISSUE STATUS

PERMIT PLANS

HALEY WARD
ENGINEERING | ENVIRONMENTAL | SURVEYING
200 Griffin Rd, Unit 14
Portsmouth, New Hampshire 03801
603.430.9282
WWW.HALEYWARD.COM

PROJECT

MIXED USE DEVELOPMENT
1-15 CONGRESS STREET PORTSMOUTH, N.H.

TITLE

SITE DETAILS

STATE OF NEW HAMPSHIRE JOHN R. CHAGNON No. 9651 LICENSED PROFESSIONAL ENGINEER

DATE	SCALE
JULY 2024	NTS

DRAWN BY	DESIGNED BY	CHECKED BY
PJM	---	JRC

PROJECT No. 5010156.3406

SHEET No. C502

REV No. 2

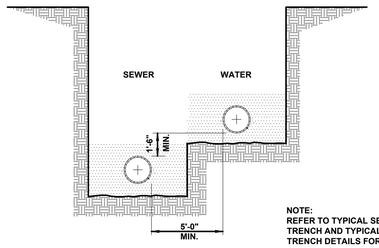

NOTE:
REFER TO TYPICAL SEWER TRENCH AND TYPICAL WATER TRENCH DETAILS FOR ADDITIONAL INFORMATION.

TYPICAL SEWER / WATER SEPARATION DETAIL

NTS

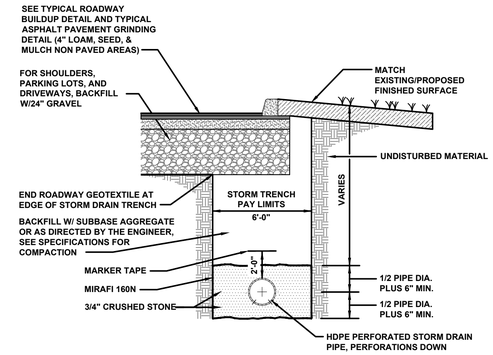

NOTE:

1. STORM DRAIN PIPE TO BE USED FOR UNDERDRAIN SHALL BE PERFORATED IN ACCORDANCE WITH THE APPLICABLE PERFORATION REQUIREMENTS OF AASHTO M294 CLASS I PERFORATIONS.

TYPICAL PERFORATED STORM DRAIN TRENCH DETAIL

NTS

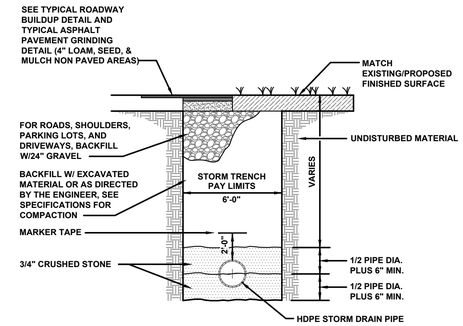

NOTE:

1. MATCH EXISTING SURFACE FINISH, EXCEPT WHERE NOTED. IN LAWN AREAS INSTALL 4" OF LOAM AND SEED AND MULCH.

TYPICAL STORM DRAIN TRENCH DETAIL

NTS

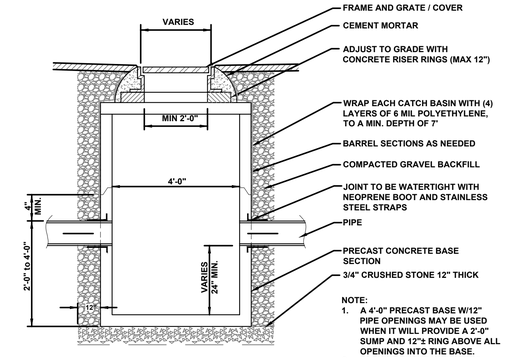

NOTE:
1. A 4'-0" PRECAST BASE W/12" PIPE OPENINGS MAY BE USED WHEN IT WILL PROVIDE A 2'-0" SUMP AND 12"± RING ABOVE ALL OPENINGS INTO THE BASE.
2. PROVIDE THE "ELIMINATOR" CATCH BASIN OIL TRAP.

TYPICAL CATCH BASIN DETAIL

NTS

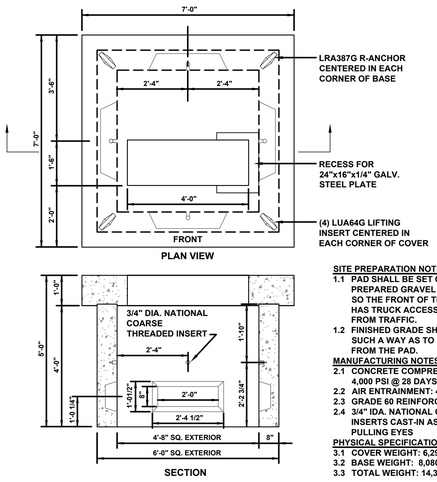

SITE PREPARATION NOTES:
1.1 PAD SHALL BE SET ON A PROPERLY PREPARED GRAVEL BASE AND ORIENTED SO THE FRONT OF THE TRANSFORMER HAS TRUCK ACCESS AND IS PROTECTED FROM TRAFFIC.
1.2 FINISHED GRADE SHALL BE PREPARED IN SUCH A WAY AS TO SHED WATER AWAY FROM THE PAD.

MANUFACTURING NOTES:
2.1 CONCRETE COMPRESSIVE STRENGTH: 4,000 PSI @ 28 DAYS.
2.2 AIR ENTRAINMENT: 4%-6%
2.3 GRADE 60 REINFORCEMENT
2.4 3/4" IDA. NATIONAL COURSE THREADED INSERTS CAST-IN AS SHOWN FOR PULLING EYES

PHYSICAL SPECIFICATIONS
3.1 COVER WEIGHT: 6,290 LBS
3.2 BASE WEIGHT: 8,080 LBS
3.3 TOTAL WEIGHT: 14,370 LBS

*FRONT DENOTES THE SIDE ON WHICH THE ACCESS DOORS ARE LOCATED

3 PHASE TRANSFORMER PAD DETAIL

NTS

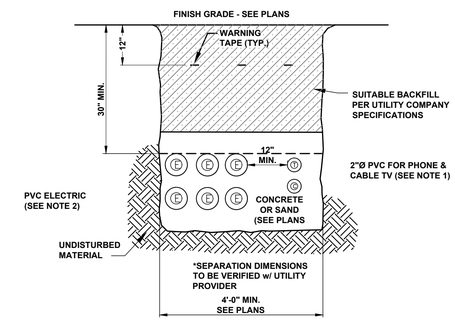

NOTES:
1) ALL CONDUIT TO BE U.L. LISTED, SCH. 80 UNDER ALL TRAVEL WAYS, & SCHED. 40 FOR THE REMAINDER.

2) NORMAL CONDUIT SIZES FOR PSNH ARE 3 INCH FOR SINGLE PHASE PRIMARY AND SECONDARY VOLTAGE CABLES, 4 INCH FOR THREE PHASE SECONDARY, AND 5 INCH FOR THREE PHASE PRIMARY.

3) ALL WORK TO CONFORM TO THE NATIONAL ELECTRICAL CODE (LATEST REVISION)

4) INSTALL A 200# PULL ROPE FOR EACH CONDUIT

5) VERIFY ALL CONDUIT SPECIFICATIONS WITH UTILITY COMPANY'S PRIOR TO ANY CONSTRUCTION.

TYPICAL UNDERGROUND UTILITY TRENCH DETAIL

NTS

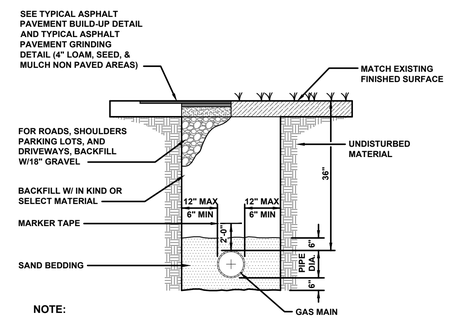

NOTE:

1. COMPACT ALL GRANULAR MATERIAL AND BACKFILL TO 95%.
2. SIDE CLEARANCE APPLICABLE TO BACKHOE OPERATIONS.

TYPICAL GAS TRENCH DETAIL

NTS

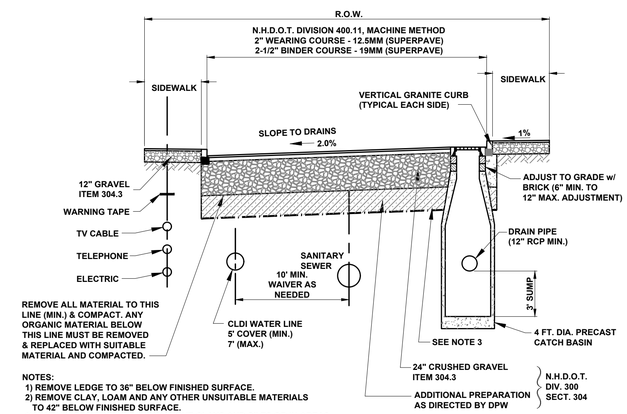

NOTES:
1) REMOVE LEDGE TO 36" BELOW FINISHED SURFACE.
2) REMOVE CLAY, LOAM AND ANY OTHER UNSUITABLE MATERIALS TO 42" BELOW FINISHED SURFACE.
3) INSTALL GEOTEXTILE FABRIC ABOVE CLAYS AND SILTS OR IN AREAS WHERE EXCAVATION IS BELOW THE SEASONAL HIGH WATER TABLE.
4) SIDEWALKS SUBJECT TO REVIEW AND APPROVAL BY CITY.

HIGH STREET ROADWAY CROSS SECTION

NTS

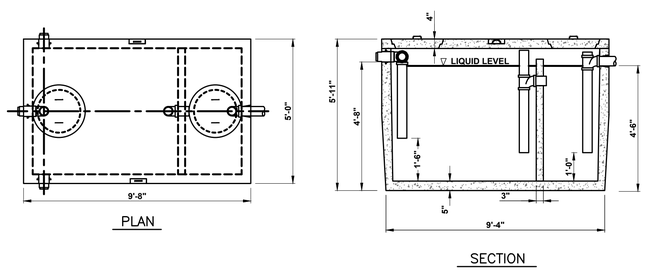

GENERAL NOTES:

CONCRETE SPECIFICATIONS:
1) 4000 PSI @ 28 DAYS.
2) 4%-6% ENTRAINED AIR.
3) TANK PENETRATIONS ARE INTEGRALLY CAST.
4) ALL JOINTS SEALED WITH BUTYL RESIN.
5) EXTERIOR TO BE COATED.

GREASE TRAP INFORMATION:
1) TANKS SHOULD BE PUMPED AS NEEDED.
2) ACCESS COVERS SHOULD HAVE RISERS TO BRING COVER ACCESS TO GRADE.
3) TANKS CAN BE VACUUM TESTED AT AN ADDITIONAL COST.

SHEA CONCRETE - 1000 GALLON 2 COMP. GREASE TRAP DETAIL

NTS

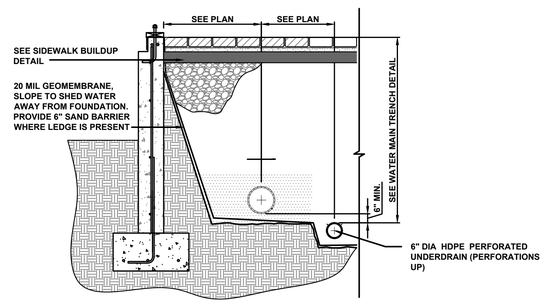

UNDERDRAINED WATER TRENCH DETAIL

N.T.S.

REV.	DATE	DESCRIPTION	BY	CHK.
2	2024.11.18	ISSUED FOR SITE PLAN REVIEW	PJM	JRC
1	2024.11.05	ISSUED FOR COMMENTS	PJM	JRC

DRAWING ISSUE STATUS

PERMIT PLANS

HALEY WARD
ENGINEERING | ENVIRONMENTAL | SURVEYING
200 Griffin Rd. Unit 14
Portsmouth, New Hampshire 03801
603.430.9282
WWW.HALEYWARD.COM

PROJECT

MIXED USE DEVELOPMENT
1-15 CONGRESS STREET PORTSMOUTH, N.H.

TITLE

SITE DETAILS

STATE OF NEW HAMPSHIRE JOHN R. CHAGNON No. 9651 LICENSED PROFESSIONAL ENGINEER

DATE	SCALE
JULY 2024	NTS

DRAWN BY	DESIGNED BY	CHECKED BY
PJM	---	JRC

PROJECT No. 5010156.3406

SHEET No. C503

REV No. 2

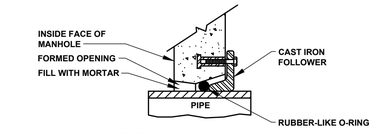

RES-SEAL

(OR ACCEPTABLE SUBSTITUTE)

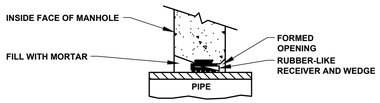

PRESS-WEDGE II

(OR ACCEPTABLE SUBSTITUTE)

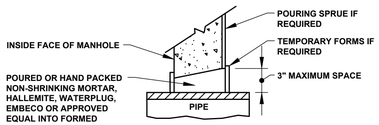

NON-SHRINKING MORTAR

(OR ACCEPTABLE SUBSTITUTE)

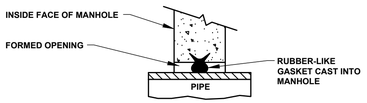

A-LOK

(OR ACCEPTABLE SUBSTITUTE)

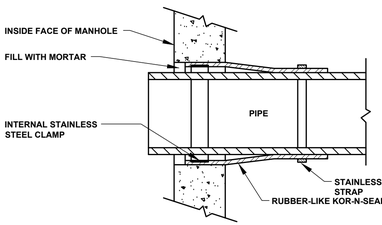

KOR-N-SEAL JOINT SLEEVE

(OR ACCEPTABLE SUBSTITUTE)

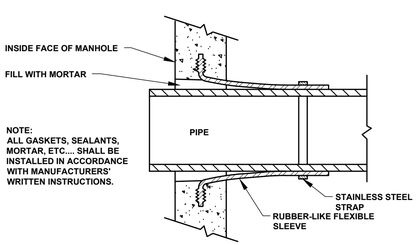

NOTE:
ALL GASKETS, SEALANTS, MORTAR, ETC.... SHALL BE INSTALLED IN ACCORDANCE WITH MANUFACTURERS' WRITTEN INSTRUCTIONS.

LOCK-JOINT FLEXIBLE MANHOLE SLEEVE

(OR ACCEPTABLE SUBSTITUTE)

DETAIL ``A" - PIPE TO MANHOLE JOINTS

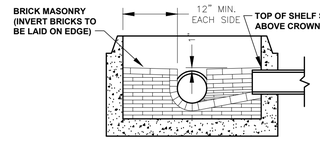

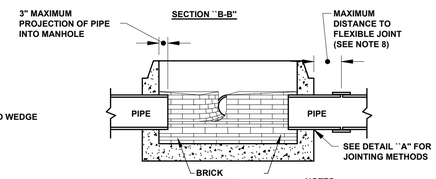

SECTION ``A-A"

NOTES:

A) INVERT AND SHELF TO BE PLACED AFTER LEAKAGE TEST.

B) CARE SHALL BE TAKEN TO INSURE THAT THE BRICK INVERT IS A SMOOTH CONTINUATION OF THE SEWER INVERT. INVERT BRICKS SHALL BE LAID ON EDGE.

C) BASE SECTION TO BE FULL WALL THICKNESS AND MONOLITHIC TO A POINT 6 INCHES ABOVE THE PIPE CROWN.

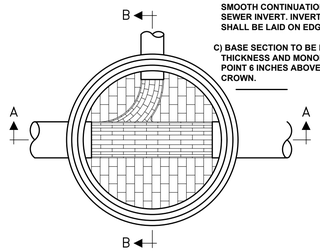

TYPICAL MANHOLE - PLAN VIEW

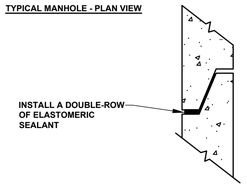

ELASTOMERIC SEALANT

NOTE:
ALL GASKETS AND SEALANTS SHALL BE INSTALLED IN ACCORDANCE WITH MANUFACTURERS' WRITTEN INSTRUCTIONS.

DETAIL ``B" - HORIZONTAL JOINTS

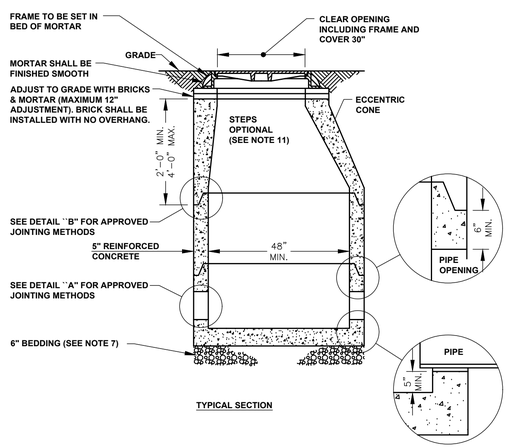

TYPICAL SECTION

GENERAL NOTES

1) IT IS THE INTENTION THAT THE MANHOLE, INCLUDING ALL COMPONENT PARTS, HAVE ADEQUATE SPACE, STRENGTH AND LEAK PROOF QUALITIES CONSIDERED NECESSARY FOR THE INTENDED SERVICE. SPACE REQUIREMENTS AND CONFIGURATIONS, SHALL BE AS SHOWN ON THE DRAWING. MANHOLES SHALL BE AN ASSEMBLY OF PRECAST SECTIONS, WITH STEEL REINFORCEMENT, WITH ADEQUATE JOINTING, OR CONCRETE CAST MONOLITHICALLY IN PLACE WITH REINFORCEMENT. IN ANY APPROVED MANHOLE, THE COMPLETE STRUCTURE SHALL BE OF SUCH MATERIAL AND QUALITY AS TO WITHSTAND LOADS OF 8 TONS (H-20 LOADING) WITHOUT FAILURE AND PREVENT LEAKAGE IN EXCESS OF ONE GALLON PER DAY PER VERTICAL FOOT OF MANHOLE, CONTINUOUSLY FOR THE LIFE OF THE STRUCTURE. A PERIOD GENERALLY IN EXCESS OF 25 YEARS IS TO BE UNDERSTOOD IN BOTH CASES.

2) BARRELS AND CONE SECTIONS SHALL BE PRECAST REINFORCED CONCRETE, OR POURED IN PLACE REINFORCED CONCRETE IF POURED AS A COMPLETE MANHOLE.

3) PRECAST CONCRETE BARREL SECTIONS, CONES AND BASES SHALL CONFORM TO ASTM C478.

4) LEAKAGE TEST MAY NOT BE FEASIBLE, BUT SHALL CONFORM TO ENV-WQ 704.17.

5) INVERTS AND SHELVES: MANHOLES SHALL HAVE A BRICK PAVED SHELF AND INVERT, CONSTRUCTED TO CONFORM TO THE SIZE OF THE PIPE AND FLOW. AT CHANGES IN DIRECTIONS, THE INVERTS SHALL BE LAID OUT IN CURVES OF THE LONGEST RADIUS POSSIBLE AND TANGENT TO THE CENTERLINE OF THE SEWER PIPES. SHELVES SHALL BE CONSTRUCTED TO THE ELEVATION OF THE HIGHEST PIPE CROWN AND SLOPED TO DRAIN TOWARD FLOWING THROUGH CHANNEL. UNDERLAYMENT OF INVERT AND SHELF SHALL CONSIST OF BRICK MASONRY.

6) FRAMES AND COVERS: MANHOLE FRAMES AND COVERS SHALL BE OF HEAVY DUTY DESIGN AND PROVIDE A 30-INCH CLEAR OPENING. A THREE INCH (MINIMUM HEIGHT) WORD ``SEWER" FOR SEWERS AND ``DRAIN" FOR DRAINS SHALL BE PLAINLY CAST INTO THE CENTER OF EACH COVER. CASTINGS SHALL CONFORM TO CLASS 30, ASTM A48.

7) BEDDING: SCREENED GRAVEL AND/OR CRUSHED STONE, FREE FROM CLAY, LOAM, ORGANIC MATTER AND MEETING ASTM C33 STONE SIZE NO. 67.

100% PASSING 1 INCH SCREEN
90%-100% PASSING 3/4 INCH SCREEN
20%- 55% PASSING 3/8 INCH SCREEN
0%- 10% PASSING #4 SIEVE
0%- 5% PASSING #8 SIEVE

WHEN ORDERED BY THE ENGINEER TO STABILIZE THE BASE, SCREENED GRAVEL OR CRUSHED STONE 1/2 INCH TO 1-1/2 INCH SHALL BE USED.

8) FLEXIBLE JOINT: A FLEXIBLE JOINT SHALL BE PROVIDED WITHIN THE FOLLOWING DISTANCES:
RCP & CI PIPE - ALL SIZES - 48"

9) SHALLOW MANHOLE: IN LIEU OF A CONE SECTION, WHEN MANHOLE DEPTH IS LESS THAN 6 FEET, A REINFORCED CONCRETE SLAB COVER MAY BE USED HAVING AN ECCENTRIC ENTRANCE OPENING AND CAPABLE OF SUPPORTING H-20 LOADS.

10) MANHOLE STEPS MAY BE PERMITTED UPON REQUEST BY THE OWNER AS SECONDARY ADDITIONAL SAFETY FEATURE SUPPLEMENTARY TO THE PRIMARY PORTABLE LADDER ENTRY AND WHEN INSTALLED UNDER THE FOLLOWING CONDITIONS:

1. THE STEPS SHALL BE MANUFACTURED OF 5/8ths INCH ROUND STAINLESS STEEL, PLASTIC COVERED STEEL OR PLASTIC. THEY SHALL BE SHAPED SO THAT THEY CANNOT BE PULLED OUT OF THE CONCRETE WALL IN WHICH THEY ARE EMBEDDED.

2. THE STEPS SHALL BE EMBEDDED IN THE CONCRETE BY THE MANUFACTURER DURING MANUFACTURE OR IMMEDIATELY FOLLOWING REMOVAL OF FORMS. SECURING THE STEPS WITH MORTAR IN DRILLED OR CAST HOLES, WILL NOT BE ACCEPTABLE.

3. THE STEPS SHALL BE OF THE DROP TYPE WITH A DEPRESSED SECTION FOR HANDHOLD. APPROXIMATELY 14" x 10" IN DIMENSION.

11) HORIZONTAL JOINTS BETWEEN SECTIONS OF PRECAST CONCRETE BARRELS SHALL BE OF A TYPE APPROVED BY THE ENGINEER, WHICH TYPE SHALL, IN GENERAL, DEPEND FOR WATER TIGHTNESS UPON AN ELASTOMERIC OR MASTIC-LIKE GASKET, IN 2 ROWS.

12) PIPE TO MANHOLE JOINTS SHALL BE ONLY AS APPROVED BY THE ENGINEER AND IN GENERAL, WILL DEPEND FOR WATERTIGHTNESS UPON EITHER AN APPROVED NON-SHRINKING MORTAR OR ELASTOMERIC SEALANT.

13) THE PURPOSE OF THIS PLAN IS TO SHOW STANDARDS FOR SEWER CONSTRUCTION.

14) ALL WORK SHALL BE IN COMPLIANCE WITH NHDES CODE OF ADMINISTRATIVE RULES PART ENV-WQ 704 DESIGN OF SEWERAGE.

15) BASE SECTIONS SHALL BE OF MONOLITHIC CONSTRUCTION TO A POINT AT LEAST 6 INCHES ABOVE THE CROWN OF THE LARGEST INCOMING PIPE.

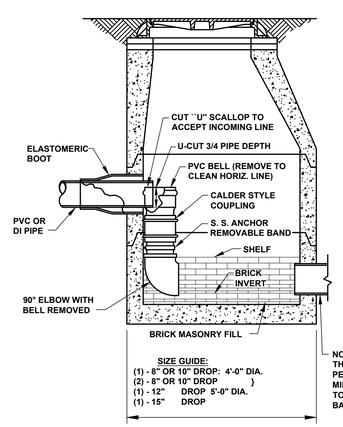

SIZE GUIDE:
(1) - 8" OR 10" DROP: 4'-0" DIA.
(2) - 8" OR 10" DROP }
(1) - 12" DROP 5'-0" DIA.
(1) - 15" DROP

INSIDE DROP MANHOLE

GENERAL NOTES

1) MINIMUM PIPE SIZE FOR HOUSE SERVICE SHALL BE FOUR INCHES.

2) PIPE AND JOINT MATERIALS:

A. PLASTIC SEWER PIPE

1. PIPE AND FITTINGS SHALL CONFORM TO THE FOLLOWING ASTM STANDARDS:

ASTM STANDARDS	GENERIC PIPE MATERIAL	SIZES APPROVED
D3034	*PVC (SOLID WALL)	8" THROUGH 15" (SDR 35)
F679	PVC (SOLID WALL)	18" THROUGH 27" (T-1 & T-2)
F794	PVC (RIBBED WALL)	8" THROUGH 36"
AWWA C900	PVC (SOLID WALL)	8" THROUGH 18"

*PVC: POLYVINYL CHLORIDE

2. JOINT SEALS FOR PVC PIPE SHALL BE OIL RESISTANT COMPRESSION RINGS OF ELASTOMERIC MATERIAL CONFORMING TO ASTM D-3212 AND SHALL BE PUSH-ON BELL AND SPIGOT TYPE.

3) DAMAGED PIPE SHALL BE REJECTED AND REMOVED FROM THE JOB SITE.

4) JOINTS SHALL BE DEPENDENT UPON A NEOPRENE OR ELASTOMERIC GASKET FOR WATER TIGHTNESS. ALL JOINTS SHALL BE PROPERLY MATCHED WITH THE PIPE MATERIALS USED. WHERE DIFFERING MATERIALS ARE TO BE CONNECTED, AS AT THE STREET SEWER WYE OR AT THE FOUNDATION WALL, APPROPRIATE MANUFACTURED ADAPTERS SHALL BE USED.

5) HOUSE SEWER INSTALLATION: THE PIPE SHALL BE HANDLED, PLACED AND JOINTED IN ACCORDANCE WITH INSTALLATION GUIDES OF THE APPROPRIATE MANUFACTURER. IT SHALL BE CAREFULLY BEDDED ON A 4 INCH LAYER OF CRUSHED STONE AND/OR GRAVEL AS SPECIFIED IN NOTE 10. BEDDING AND REFILL FOR DEPTH OF 12 INCHES ABOVE THE TOP OF THE PIPE SHALL BE CAREFULLY AND THOROUGHLY TAMPED BY HAND OR WITH APPROPRIATE MECHANICAL DEVICES.

6) THE PIPE SHALL BE LAID AT A CONTINUOUS AND CONSTANT GRADE FROM THE STREET SEWER CONNECTION TO THE FOUNDATION AT A GRADE OF NOT LESS THAN 1/4 INCH PER FOOT. PIPE JOINTS MUST BE MADE UNDER DRY CONDITIONS. IF WATER IS PRESENT, ALL NECESSARY STEPS SHALL BE TAKEN TO DEWATER THE TRENCH.

7) TESTING: WHEN REQUIRED BY THE GOVERNING AUTHORITY, TESTING SHALL CONFORM TO ENV-WQ 704.09.

8) ILLEGAL CONNECTIONS: NOTHING BUT SANITARY WASTE FLOW FROM HOUSE TOILETS, SINKS, LAUNDRY ETC. SHALL BE PERMITTED. ROOF LEADERS, FOOTING DRAINS, SUMP PUMPS OR OTHER SIMILAR CONNECTIONS CARRYING RAIN WATER, DRAINAGE OR GROUND WATER SHALL NOT BE PERMITTED.

9) HOUSE WATER SERVICE SHALL NOT BE LAID IN SAME TRENCH AS SEWER SERVICE, UNLESS IT IS ON A SHELF 12" HIGHER, AND 18" APART.

10) BEDDING: SCREENED GRAVEL AND/OR CRUSHED STONE, FREE FROM CLAY, LOAM, ORGANIC MATTER AND MEETING ASTM C33 STONE SIZE NO. 67.

100% PASSING 1 INCH SCREEN
90%-100% PASSING 3/4 INCH SCREEN
20%- 55% PASSING 3/8 INCH SCREEN
0%- 10% PASSING #4 SIEVE
0%- 5% PASSING #8 SIEVE

WHERE ORDERED BY THE ENGINEER, OVEREXCAVATE UNSTABLE TRENCH BOTTOM AND BACKFILL WITH CRUSHED STONE.

11) LOCATION: THE LOCATION OF THE TEE OR WYE SHALL BE RECORDED AND FILED IN THE MUNICIPAL RECORDS. IN ADDITION, A FERROUS METAL ROD OR PIPE SHALL BE PLACED OVER THE TEE OR WYE AS DESCRIBED IN THE TYPICAL ``CHIMNEY" DETAIL, TO AID IN LOCATING THE BURIED PIPE WITH A DIP NEEDLE OR PIPE FINDER.

12) CAST-IN-PLACE CONCRETE: SHALL CONFORM TO THE REQUIREMENTS FOR CLASS A (3000 PSI) CONCRETE OF THE NEW HAMPSHIRE DEPARTMENT OF TRANSPORTATION STANDARD SPECIFICATIONS AS FOLLOWS:

CEMENT: 6.0 BAGS PER CUBIC YARD
WATER: 5.75 GALLONS PER BAG OF CEMENT
MAXIMUM AGGREGATE SIZE: 3/4 INCH

13) BACKFILL UP TO SUBBASE GRAVEL SHALL BE WITH EXCAVATED SOIL FROM TRENCHING OPERATIONS. COMPACT IN 8" LIFTS WITH VIBRATORY PLATE COMPACTORS TO 90% OF MODIFIED PROCTOR DENSITY. IF FINE-GRAINED, COMPACT WITH POGO STICKS OR SHEEPSFOOT ROLLERS. PLACE NO LARGE ROCKS WITHIN 24" OF PIPE. TRENCHES THAT ARE NOT ADEQUATELY COMPACTED SHALL BE RE-EXCAVATED AND BACKFILLED UNDER THE SUPERVISION OF THE DESIGN ENGINEER OR GOVERNING BODY. UNSUITABLE BACKFILL MATERIAL INCLUDES CHUNKS OF PAVEMENT, TOPSOIL, ROCKS OVER 6" IN SIZE, MUCK, PEAT OR PIECES OF PAVEMENT.

14) THE CONTRACTOR IS SOLELY RESPONSIBLE FOR JOB-SITE SAFETY AND COMPLIANCE WITH GOVERNING REGULATIONS.

15) ORDERED EXCAVATION OF UNSUITABLE MATERIAL BELOW GRADE. REFILL WITH BEDDING MATERIAL. FOR TRENCH WIDTH SEE TRENCH DETAIL.

16) SAND BLANKET: CLEAN SAND, FREE FROM ORGANIC MATTER, SO GRADED THAT 90% - 100% PASSES A 1/2 INCH SIEVE AND NOT MORE THAN 15% WILL PASS A #200 SIEVE. BLANKET MAY BE OMITTED FOR DUCTILE IRON AND REINFORCED CONCRETE PIPE PROVIDED THAT NO STONE LARGER THAN 2 INCHES IS IN CONTACT WITH THE PIPE.

17) BASE COURSE GRAVEL, IF ORDERED BY THE ENGINEER, SHALL MEET THE REQUIREMENTS OF DIVISION 300 OF THE LATEST EDITION OF THE:

STANDARD SPECIFICATIONS FOR ROAD AND BRIDGE CONSTRUCTION
OF THE STATE OF NEW HAMPSHIRE, DEPARTMENT OF TRANSPORTATION.

18) IF FULL ENCASEMENT IS UTILIZED, DEPTH OF CONCRETE BELOW PIPE SHALL BE 1/4 I.D. (4" MIN.) BLOCK SUPPORT SHALL BE SOLID CONCRETE BLOCKS.

19) THE CONTRACTOR SHALL NOTIFY DIG SAFE AT 1-888-DIG-SAFE (1-888-344-7233) AT LEAST 72 HOURS PRIOR TO COMMENCING ANY EXCAVATION.

20) THE PURPOSE OF THIS PLAN IS TO SHOW STANDARDS FOR SEWER CONSTRUCTION.

21) ALL WORK SHALL BE IN COMPLIANCE WITH NHDES CODE OF ADMINISTRATIVE RULES PART ENV-WQ 704 DESIGN OF SEWERAGE.

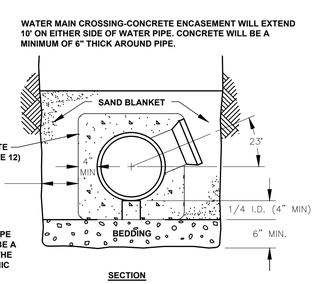

SECTION

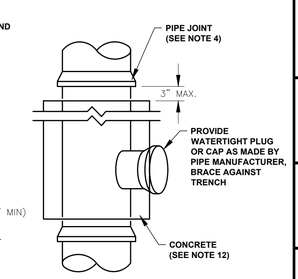

PLAN

CONCRETE FULL ENCASEMENT

NOT TO SCALE

NOTES:

1) THE CONTRACTOR SHALL NOTIFY DIG SAFE AT 1-888-DIG-SAFE (1-888-344-7233) AT LEAST 72 HOURS PRIOR TO COMMENCING ANY EXCAVATION ON PUBLIC OR PRIVATE PROPERTY.

2) UNDERGROUND UTILITY LOCATIONS ARE BASED UPON BEST AVAILABLE EVIDENCE AND ARE NOT FIELD VERIFIED. LOCATING AND PROTECTING ANY ABOVEGROUND OR UNDERGROUND UTILITIES IS THE SOLE RESPONSIBILITY OF THE CONTRACTOR AND/OR THE OWNER. UTILITY CONFLICTS SHOULD BE REPORTED AT ONCE TO THE DESIGN ENGINEER.

3) CONTRACTOR SHALL INSTALL AND MAINTAIN EROSION CONTROL MEASURES IN ACCORDANCE WITH THE "NEW HAMPSHIRE STORMWATER MANUAL, VOLUME 3, EROSION AND SEDIMENT CONTROLS DURING CONSTRUCTION. (NHDES DECEMBER 2008).

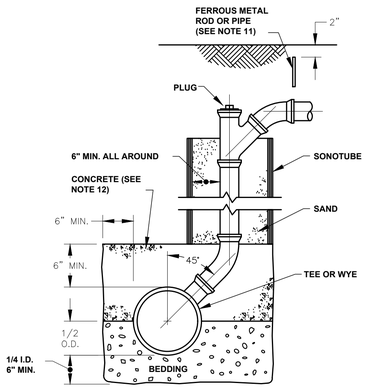

NO BACKFILLING BEFORE CONCRETE HAS TAKEN INITIAL SET (7 HRS. MIN.). BACKFILLING TO BE BROUGHT UP EVENLY ON ALL SIDES.

CHIMNEY (SEE NOTE)

NOT TO SCALE

APPROVED BY THE PORTSMOUTH PLANNING BOARD

CHAIRMAN

DATE

SEWER MANHOLE DETAILS

INSTALL PER PORTSMOUTH REQUIREMENTS NTS

REV.	DATE	DESCRIPTION	BY	CHK.
2	2024.11.18	ISSUED FOR SITE PLAN REVIEW	PJM	JRC
1	2024.11.05	ISSUED FOR COMMENTS	PJM	JRC

DRAWING ISSUE STATUS

PERMIT PLANS

HALEY WARD
ENGINEERING | ENVIRONMENTAL | SURVEYING
WWW.HALEYWARD.COM
200 Griffin Rd. Unit 14
Portsmouth, New Hampshire 03801
603.430.9282

PROJECT

MIXED USE DEVELOPMENT
1-15 CONGRESS STREET PORTSMOUTH, N.H.

TITLE

SITE DETAILS

STATE OF NEW HAMPSHIRE JOHN R. CHAGNON No. 3651 LICENSED PROFESSIONAL ENGINEER

DATE	SCALE
JULY 2024	NTS

DRAWN BY	DESIGNED BY	CHECKED BY
PJM	---	JRC

PROJECT No. 5010156.3406

SHEET No. C504

REV No. 2

OVERVIEW

The Bio Clean Downspout Filter is the industry's leading solution for treatment of roof runoff. This technology is used to treat commercial and industrial rooftops along with highrise buildings, parking structures, and residential buildings.

Available in 3 sizes, this filter can easily adapt to downspouts 2" to 12" in diameter. The filter comes standard with rubber boots that allow for easy installation to the downspout.

Proven since 2003, the Downspout Filter has been used on hundreds of installations throughout the United States. All internal components are constructed of stainless steel.

The sleek in-line design allows the filter to be used in tight spaces. Approved by the IAPMO, this filter can meet all your needs.

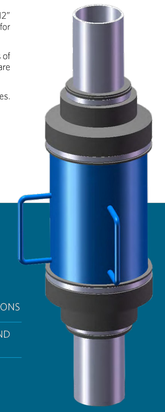

PERFORMANCE

93% REMOVAL OF TSS

87% REMOVAL OF HYDROCARBONS

- EFFECTIVE AT REMOVING METALS, NUTRIENTS, AND BACTERIA (MEDIA TYPE)

ADVANTAGES

- 1-YEAR WARRANTY
- NO NETS OR GEOFABRICS
- SLEEK IN-LINE DESIGN
- HIGH TREATMENT FLOW RATE
- HIGH BYPASS FLOW RATE
- LOW COST

SERVICE MANUAL
(Cleaning Procedures)

Bio Clean DOWNSPOUT FILTER
Screen Type With Hydrocarbon Boom

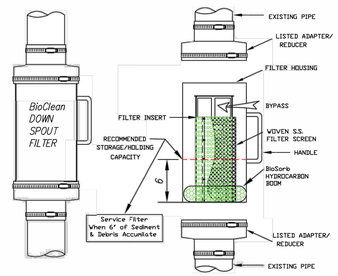

DETAIL OF PARTS

TOOLS AND EQUIPMENT NEEDED:

1. Medium size flat scred driver
2. BioSorb hydrocarbon boom. 25-1/2" X 2" dia. (Call Bio Clean to order)
3. Trash container or bag
4. Wooden dowel approx. 3' x 1/2' dia.

Bio Clean
A Forterra Company
P.O. BOX 869, Oceanside, Ca. 92049
(760) 433-7640 Fax (760) 433-3176
www.biocleanenvironmental.net

REMOVING FILTER

Bio Clean
A Forterra Company
P.O. BOX 869, Oceanside, Ca. 92049
(760) 433-7640 Fax (760) 433-3176
www.biocleanenvironmental.net

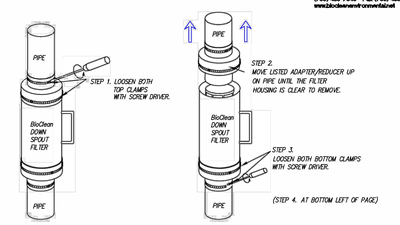

CLEANING FILTER

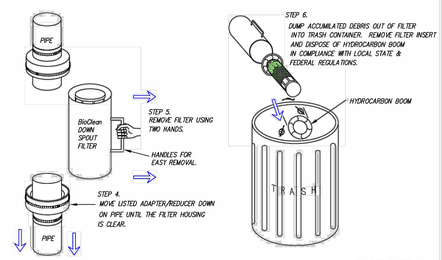

Bio Clean
A Forterra Company
P.O. BOX 869, Oceanside, Ca. 92049
(760) 433-7640 Fax (760) 433-3176
www.biocleanenvironmental.net

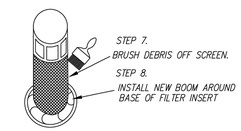

REPLACING FILTER INSERT

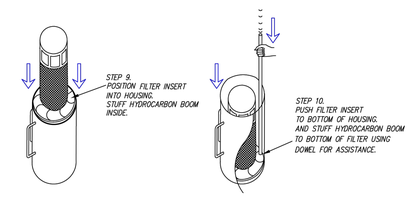

REPLACING FILTER

Bio Clean
A Forterra Company
P.O. BOX 869, Oceanside, Ca. 92049
(760) 433-7640 Fax (760) 433-3176
www.biocleanenvironmental.net

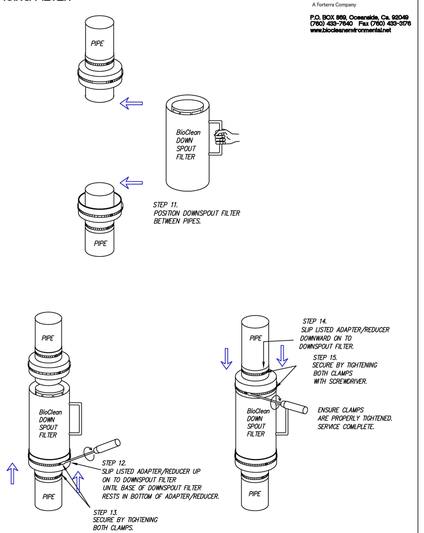

APPROPRIATE INSTALLATION

FILTER CENTERED BETWEEN PIPES WITH EVEN GAPS ON TOP AND BOTTOM

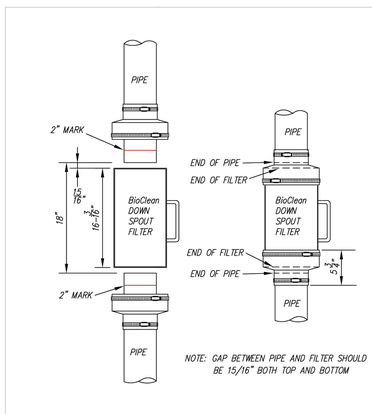

Bio Clean
A Forterra Company
P.O. BOX 869, Oceanside, Ca. 92049
(760) 433-7640 Fax (760) 433-3176
www.biocleanenvironmental.net

OPERATION

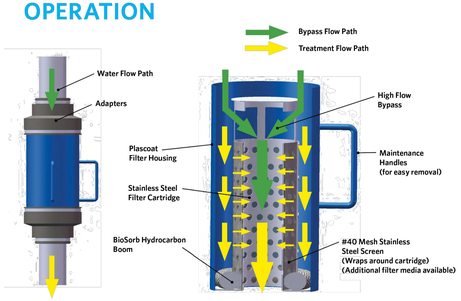

APPROVALS

IAPMO Testing & Approval Listing

SPECIFICATIONS

MODEL #	INLET ID (dia., in.)	FILTER OD (dia., in.)	STORAGE CAP. (cu. ft.)	FILTERED FLOW (gpm)	BYPASS FLOW (gpm)
BC-DF4	4	6.625	0.09	249	566
BC-DF6	6	8.625	0.21	509	1006
BC-DF8	8	8.625	0.21	509	1006
BC-DF10	10	12.75	0.77	1145	2264
BC-DF12	12	12.75	0.77	1145	2264

DOWNSPOUT FILTER

MAINTENANCE:

THE FILTER IS DESIGNED TO ALLOW FOR THE USE OF MANUAL OR VACUUM REMOVAL OF CAPTURED MATERIALS IN THE FILTER

STRUCTURE. FILTERS CAN BE CLEANED EASILY BY SIMPLY LOOSENING THE METAL CLAMPS AND REMOVING THE FILTER. THE HYDROCARBON

ADSORBENT MEDIA THEN IS REMOVED AND THE TRASH AND DEBRIS CAN BE REMOVED FROM THE STRUCTURE. AT EACH CLEANING, NEW

HYDROCARBON ADSORBENT MEDIA SHOULD BE REINSTALLED.

MAINTENANCE NOTES:

1. BIO CLEAN ENVIRONMENTAL SERVICES, INC. RECOMMENDS CLEANING AND DEBRIS REMOVAL MAINTENANCE A MINIMUM OF TWO TO FOUR TIMES PER YEAR, AND REPLACEMENT OF MEDIA BOOMS A MINIMUM OF TWICE A YEAR.
2. THE DOWNSPOUT FILTER CAN BE CLEANED BY LOOSING THE METAL CLAMPS AT BOTTOM AND TOP OF RUBBER BOOTS. REMOVE

THE FILTER BY GRASPING THE HANDLES, SLIDE DOWN THE BOTTOM BOOT OVER THE OUTFLOW PIPE AND SLIDE UP THE TOP BOOT OVER

INFLOW PIPE. PLACE THE FILTER ON THE GROUND. DISPOSE OF ANY TRASH AND SEDIMENTS COLLECTED IN FILTER.

3. ONCE THE FILTER IS FREE, REMOVE THE INTERIOR INSERT. REMOVE THE HYDROCARBON ADSORBENT MEDIA BY UNWRAPPING IT

FROM THE INTERIOR INSERT AND REPLACING WITH A NEW MEDIA, WRAPPING IT THE SAME WAY.

4. PLACE THE INTERIOR INSERT BACK INTO THE FILTER.
5. PLACE THE FILTER BACK IN LINE WITH THE PIPE AND SLIDE BACK THE TOP AND BOTTOM BOOTS IN PLACE AND TIGHTEN THE METAL CLAMPS SECURELY.
6. EVALUATION OF THE HYDROCARBON MEDIA SHALL BE PERFORMED AT EACH CLEANING. IF THE MEDIA IS FILLED WITH

HYDROCARBONS AND OILS IT SHOULD BE REPLACED.

7. TRANSPORT ALL DEBRIS, TRASH, ORGANICS AND SEDIMENTS TO APPROVED FACILITY FOR DISPOSAL IN ACCORDANCE WITH LOCAL AND STATE REQUIREMENTS.
8. THE HYDROCARBON MEDIA WITH ABSORBED HYDROCARBONS IS CONSIDERED HAZARDOUS WASTE AND NEEDS TO BE HANDLED

AND DISPOSED OF AS HAZARDOUS MATERIAL. PLEASE REFER TO STATE AND LOCAL REGULATIONS FOR THE PROPER DISPOSAL OF USED MOTOR OIL/FILTERS.

9. FOLLOWING MAINTENANCE AND/OR INSPECTION, THE MAINTENANCE OPERATOR SHALL PREPARE A MAINTENANCE/INSPECTION RECORD. THE RECORD SHALL INCLUDE ANY MAINTENANCE ACTIVITIES PERFORMED, AMOUNT AND DESCRIPTION OF DEBRIS COLLECTED, AND CONDITION OF FILTER.
10. THE OWNER SHALL RETAIN THE MAINTENANCE/INSPECTION RECORD FOR A MINIMUM OF FIVE YEARS FROM THE DATE OF MAINTENANCE. THESE RECORDS SHALL BE MADE AVAILABLE TO THE GOVERNING MUNICIPALITY FOR INSPECTION UPON REQUEST AT ANY TIME.
11. ANY TOXIC SUBSTANCE OR ITEM FOUND IN THE FILTER IS CONSIDERED AS HAZARDOUS MATERIAL AND CAN ONLY BE HANDLED BY A CERTIFIED HAZARDOUS WASTE TRAINED PERSON (MINIMUM 24-HOUR HAZWOPER).

REV.	DATE	DESCRIPTION	BY	CHK.
2	2024.11.18	ISSUED FOR SITE PLAN REVIEW	PJM	JRC
1	2024.11.05	ISSUED FOR COMMENTS	PJM	JRC

DRAWING ISSUE STATUS

PERMIT PLANS

HALEY WARD
ENGINEERING | ENVIRONMENTAL | SURVEYING
200 Griffin Rd. Unit 14
Portsmouth, New Hampshire 03801
603.430.9282
WWW.HALEYWARD.COM

PROJECT

MIXED USE DEVELOPMENT
1-15 CONGRESS STREET PORTSMOUTH, N.H.

TITLE

SITE DETAILS

STATE OF NEW HAMPSHIRE JOHN R. CHAGNON No. 3851 LICENSED PROFESSIONAL ENGINEER

DATE	SCALE
JULY 2024	NTS

DRAWN BY	DESIGNED BY	CHECKED BY
PJM	---	JRC

PROJECT No. 5010156.3406

SHEET No. **C505** REV No. **2**

November 18, 2024

NEX-2400328.00

Mr. Rick Chellman, Planning Board Chair
City of Portsmouth
1 Junkins Avenue
Portsmouth, NH 03801

SUBJECT: Application for Parking Conditional Use Permit (CUP) Approval
Tax Map 117, Lots 12 – 15, #1 & 15 Congress Street

Dear Mr. Chellman and Planning Board members:

On behalf of One Market Square, LLC, Greenman-Pedersen Inc. (GPI) hereby applies for a Parking Conditional Use Permit (CUP) for the redevelopment of the site at #1 & #15 Congress Street. The existing mixed-used use buildings are proposed for redevelopment to provide a total of ±8,430 square feet (SF) of office space, ±24,320 SF of retail space, ±9,140 SF of restaurant space, and 40 residential apartment units. As the site is located within the City's Downtown Overlay District, parking for the proposed office, restaurant, and retail spaces is anticipated to occur within on-street parking spaces and in area public parking garages and lots. Parking for the proposed residential units will be provided in a basement-level parking garage to contain a total of 21 vehicle parking spaces and 36 bicycle parking spaces.

The Applicant has made best efforts to renovate and retrofit the existing buildings on the site. As such, the number of on-site parking spaces that can be provided within the below-ground parking garage is limited by the size of the existing surface lot on Parcel 14 and foundations for the existing buildings on site. The Applicant has maximized the number of vehicle parking spaces to be provided within the underground lot with the introduction of a vehicle elevator. Areas of the underground garage that cannot accommodate vehicle turning maneuvers are proposed for bicycle parking to offset the deficit in vehicle parking spaces within the garage. The site is located in a dense multi-use urban area with immediate access to numerous multi-modal travel opportunities, including walking, biking, and public transit services. In addition, the site is located in close proximity to other land uses for employment, shopping, and entertainment for residents of the proposed apartments, reducing the need to own a vehicle. The provision of 36 bicycle parking spaces within secured, weather-protected parking areas will further reduce the need for residents to own vehicles.

The City's zoning ordinance requires a total of 53 parking spaces on the site to accommodate the proposed 40 residential units, resulting in a deficit of 32 parking spaces. Since 21 vehicle parking spaces are being provided on the site, this request is to provide twenty-one (21) parking spaces where fifty-three (53) are required. A detailed parking demand assessment was performed as part of the *Traffic Impact Assessment* (TIA)[1] that is attached to this letter for reference.

We submit that the application conforms to the Portsmouth Ordinance Sections, repeated below with comments in **bold** text, as follows:

> <u>Section 10.1112.141:</u> An application for a conditional use permit under this section shall include a parking demand analysis demonstrating that the proposed number of off-street parking spaces is sufficient for the proposed use. **The parking demand assessment contained in the attached *Traffic Impact Assessment* indicates that the proposed residential units are anticipated to generate a peak parking demand of 28 parking spaces based on Institute of Transportation Engineers (ITE) parking demand generation rates for similar uses in dense multi-use urban settings. The provision of 36 bicycle parking spaces is anticipated to decrease the vehicle parking demand to 22 parking spaces, resulting in deficit of**

[1] *Traffic Impact Assessment, #1 & 15 Congress Street – Portsmouth, New Hampshire*; prepared by Greenman-Pedersen, Inc.; dated November 18, 2024.

only one parking space on-site for the proposed residential uses. This additional vehicle can easily be accommodated within one of the seven (7) public parking lots and garages that are located within 2,000 feet (10-minute walk) of the site.

Section 10.1112.142: An application for a conditional use permit under this section shall identify permanent evidence-based measures to reduce parking demand, including but not limited to provision of rideshare/micro transit services or bike share station(s) servicing the property, proximity to public transit, car/van-pool incentives, alternative transit subsidies, provisions for teleworking, and shared parking on a separate lot subject to the requirements of 10.1112.62. **The location of the proposed residential units is within a dense urban core and in close proximity to numerous opportunities for employment, shopping, and entertainment within walking distance. In addition, the site is located approximately 200 feet from the Hanover Station where bus transportation is provided along seven (7) bus routes by COAST (Cooperative Alliance for Seacoast Transportation). A stop is also provided on Congress Street at Market Square, less than 100 feet from the building entrance, for COAST Bus Routes 4, 40, and 41. The Applicant will provide 36 bicycle parking spaces within the on-site underground parking garage for secure, weather-protected bicycle parking for residents to further promote alternative travel.**

Section 10.1112.143: The Planning Board may grant a conditional use permit only if it finds that the number of off-street parking spaces required or allowed by the permit will be adequate and appropriate for the proposed use of the property. In making this determination, the Board may accept, modify or reject the findings of the applicant's parking demand analysis. **The parking analysis provided in the *Traffic Impact Assessment* indicates that the proposed development will generate a peak parking demand of 28 parking spaces based on ITE parking demand generation rates. The provision of 36 bicycle parking spaces may reduce this parking demand by up to six spaces, resulting in a peak parking demand of 22 vehicle parking spaces. The proposed on-site parking garage will provide 21 vehicle parking spaces, resulting in a deficit of only one parking space based on ITE data. This additional vehicle can be accommodated within the adjacent Hanover Garage or within one of the other six public parking facilities located within 2,000 feet (10-minute walk) of the site. Further, the Applicant plans to market the proposed residential units to residents desiring a downtown location, close to amenities and public transit services. As such, many of the residents may not own vehicles, thus further reducing the anticipated parking demand.**

Section 10.1112.144: At its discretion, the Planning Board may require more off-street parking spaces than the minimum number requested by the applicant or may allow fewer spaces than the maximum number requested by the applicant. **The application requests approval as presented; the maximum available given the existing site configuration.**

Sincerely,

GREENMAN-PEDERSEN, INC.

Rebecca L. Brown, P.E.
Senior Project Manager
116 South River Road, Building B, Suite 1, Bedford, NH 03110

Enclosure(s)

cc: Mark McNabb, McNabb Properties
Tracy Kozak, Arcove Architects
John Chagnon, Ambit Engineering

TECHNICAL MEMORANDUM

REF: NEX-2200015.00

DATE: November 18, 2024

TO: Mr. Mark A. McNabb
McNabb Properties
3 Pleasant Street, Suite 400
Portsmouth, New Hampshire 03801

FROM: Ms. Rebecca L. Brown, P.E., Senior Project Manager

RE: Traffic Impact Assessment
#1 & 15 Congress Street – Portsmouth, New Hampshire

INTRODUCTION

Greenman-Pedersen, Inc. (GPI) has prepared this *Traffic Impact Assessment* (TIA) for a proposed mixed-use redevelopment located at #1 & 15 Congress Street in Portsmouth, New Hampshire. The site is comprised of two lots on Tax Map 117, Parcels 12 - 15. Parcels 12 and 13 (#15 Congress Street) currently contain a mixed-use building with approximately 11,630 square feet (SF) of restaurant space and 3,430 SF of retail space on the first floor and basement levels, and 35,290 SF of office space and two residential apartment unit on the upper levels. Parcel 14 currently contains a 4-story mixed-use building with retail and restaurant space on the first floor and office and apartment space on the upper floors. Parcel 15 contains a private parking locate. Parcels 14 and 15 (#1 Congress Street) were previously approved for a redevelopment project consisting of renovating a portion of the existing building on Parcel 14 and constructing a 4-story addition to encompass the remainder of Parcels 14 and 15, and constructing basement-level parking. Access to the parking lot was proposed to be provided via a driveway on Haven Court to a vehicle elevator for access to the basement level. Upon completion, the Project was proposed to provide ±8,025 SF of retail space on the first floor, ±8,312 SF of office space on the second floor and a total of 18 residential units on the upper floors. The project has since been modified to include the redevelopment of both #1 and #15 Congress Street. As part of the Project, the space within the building at #15 Congress Street will be converted to approximately ±12,785 SF of retail space, ±8,665 SF of restaurant space and 22 residential apartment units. The redevelopment of #1 Congress Street has also been modified to include extending a portion of the building to connect to the existing JJ Newberry building at #15 Congress Street. Upon completion, #1 Congress Street will provide ±8,430 SF of office space, ±475 SF of restaurant space, ±11,535 SF of retail space, and 18 residential apartment units. Access to the underground parking lot will still be provided via a driveway on Haven Court, which will be extended to Fleet Street and converted to a pedestrian walkway.

This TIA provides a preliminary assessment of the potential vehicular traffic and parking demand to be generated by the proposed redevelopment, and a review of the safety of the roadways providing access/egress for the redevelopment.

The site is bounded by Haven Court to the north, Congress Street to the south, High Street to the east, and Fleet Street to the west. The site location in relation to the surrounding roadways is shown on the map on Figure 1.

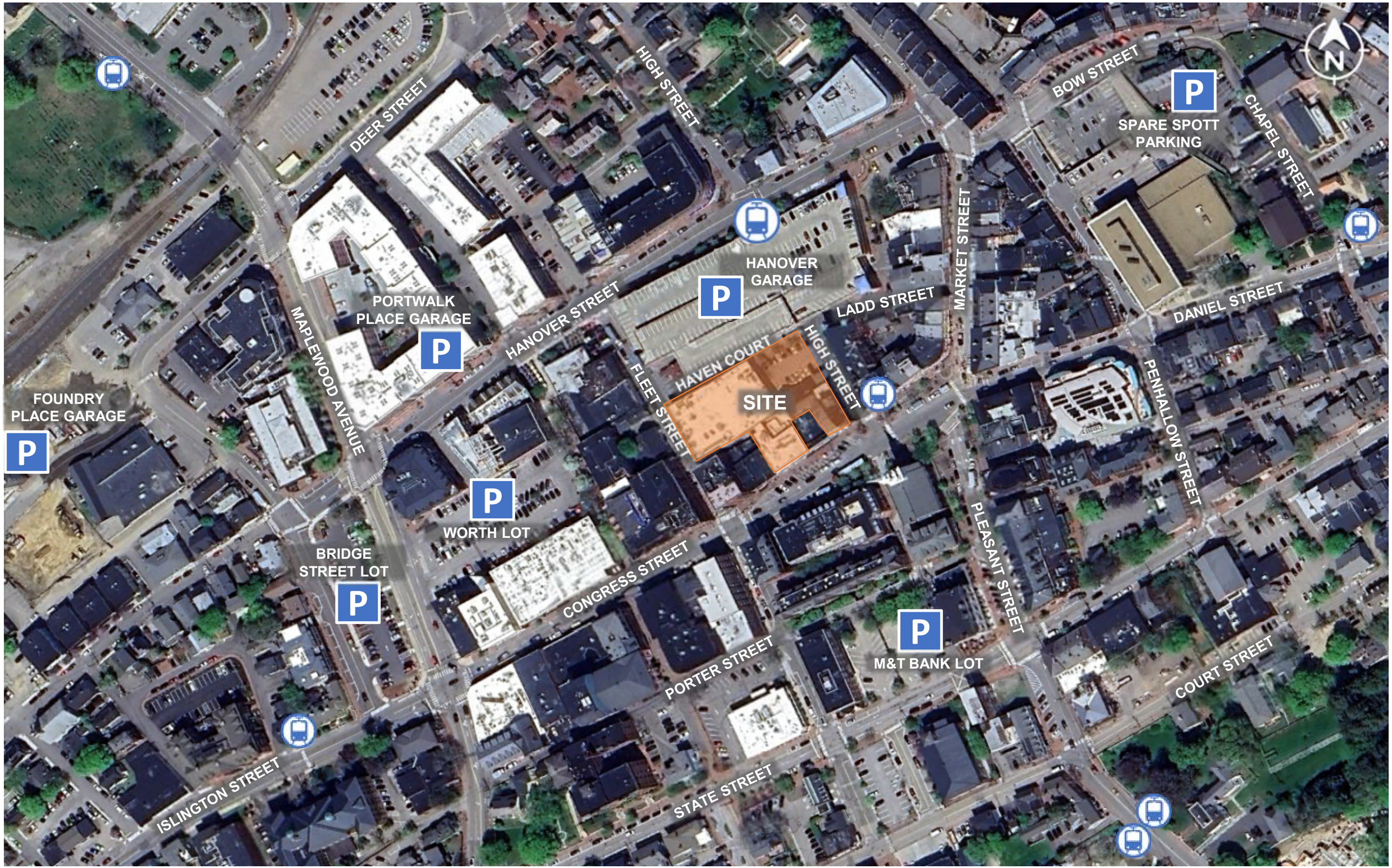

GPI Greenman-Pedersen, Inc. || 181 Ballardvale Street, Suite 202, Wilmington, MA 01887
#1 & 15 MARKET STREET – PORTSMOUTH, NEW HAMPSHIRE

FIGURE 1 – SITE LOCATION MAP

COLLISIONS

Collision data for the section of Congress Street between Market Square and Fleet Street, as well as along High Street, Haven Court, Ladd Street, and Fleet Street, were obtained from NHDOT for the latest complete three years available (2015-2017). A summary of the crashes at this intersection is provided in Table 1. The detailed crash history is provided in the Appendix.

Based on the collision data, the section of Congress Street between Market Square and Fleet Street experienced an average of 5.0 collisions per year over the three-year study period. Of the 15 crashes, three were single-vehicle crashes with a light pole and may have involved vehicles striking the light poles immediately adjacent to the angled parking spaces along the northerly side of Congress Street. Five of the collisions involved a collision with a pedestrian, three of which occurred late at night when visibility of pedestrians in the roadway may have been a factor. Only one of the pedestrian crashes occurred at the intersection with High Street and involved a pedestrian crossing outside of the crosswalk at night.

The section of Fleet Street between Congress Street and Hanover Street experienced an average of 2.0 collisions per year over the three-year study period. One of the collisions occurred with a parked vehicle near the intersection with Congress Street under dark conditions. Two of the collisions occurred late night in front of Gilley's Diner and an additional three collisions occurred in the evening at the driveway with Gilley's Diner. Fleet Street near Gilley's Diner is a narrow two-way roadway with a total 27-foot roadway width consisting of a 7.5-ft parking lane, a 10-ft southbound travel-lane and a 9.5-ft northbound travel-lane. The narrow roadway width, combined with parking along the west side of the roadway makes turning maneuvers in and out of Gilley's Diner parking lot difficult. In addition, the Hanover Street Garage and J.J. Newberry Buildings are located immediately adjacent to the roadway on either side of the parking lot for Gilley's Diner, and block sight lines for vehicles backing out of the parking spaces at Gilley's Diner.

There were no collisions reported along Haven Court, High Street, or Ladd Street over the three-year study period.

TABLE 1
Collision Summary

Location	Number of Collisions		Severity [a]				Collision Type [b]					Percent During	
	Total	Average per Year	PD	PI	F	NR	VEH	PED	FO	SV	U	Commuter Peak [c]	Wet/Icy Conditions [d]
Congress Street from Market Square to Fleet Street	15	5.0	11	4	--	--	7	5	3	--	--	20%	20%
Haven Court	0	0.0	--	--	--	--	--	--	--	--	--	0%	0%
High Street	0	0.0	--	--	--	--	--	--	--	--	--	0%	0%
Ladd Street	0	0.0	--	--	--	--	--	--	--	--	--	0%	0%
Fleet Street from Congress Street to Hanover Street	6	2.0	5	1	--	--	5	--	1	--	--	0%	0%

Source: NHDOT (2015-2017).

[a] PD = property damage only; PI = personal injury; F = fatality, NR = not reported.

[b] VEH = collision with another motor vehicle; PED = pedestrian / bicycle; FO = fixed object; SV = single vehicle; U = unknown.

[c] Percent of vehicle incidents that occurred during the weekday AM (7:00 AM-9:00 AM) and weekday PM (4:00 PM -6:00 PM) commuter peak periods.

[d] Represents the percentage of only “known” collisions occurring during inclement weather conditions.

TRIP GENERATION

The site at #1 Congress Street currently contains approximately 1,180 SF of retail space and 5,500 SF of restaurant space on the first floor, with an additional 2,720 SF of office space and 10 residential units on the upper floors. The site at #15 Congress Street currently contains 11,630 square feet (SF) of restaurant space , 3,430 SF of retail, 35,290 SF of office space and two residential units. Upon completion, the Project will provide a total of ±8,430 SF of office space, ±24,320 SF of retail space, ±9,140 SF of restaurant space, and 40 residential apartment units. GPI utilized trip-generation rates published by the Institute of Transportation Engineers (ITE) *Trip Generation Manual, 11th Edition*[1] for Land Use Code (LUC) 221 (Multi-family Housing (Mid-Rise)), LUC 710 (General Office Building), LUC 822 (Strip Retail Plaza <40k)), and LUC 932 (High Turnover Sit-Down Restaurant) to estimate the trips generated by the proposed uses.

The Project will be located in downtown Portsmouth, in close proximity to multiple retail, restaurant, office, residential, and entertainment uses for sharing of trips between uses. As a result, many of the trips generated by the site will be walking and biking trips. In addition, the site is located in close proximity to multiple bus routes, allowing for easy access to public transportation for access to/from the site. Therefore, the trip rates for the residential (LUC 221), office (LUS 710), and retail (LUC 822) uses were based on Dense Multi-Use Urban settings. ITE does not provide trip generation data within dense multi-use urban settings for restaurant uses, therefore, the trip rates for the restaurant uses were based on General Urban / Suburban settings. The resulting trip generation estimate is summarized in Table 2, and the detailed calculations are provided in the Appendix.

TABLE 2 – Proposed Trip Generation Summary

Time Period/Direction	Residential Trips (LUC 221) [a]	Office Trips (LUC 710) [b]	Retail Trips (LUC 822) [c]	Restaurant Trips (LUC 932) [d]	Total Trips [e]
Weekday Daily	118	56	824	980	**1,978**
Weekday AM Peak Hour:					
Enter	2	6	22	48	**78**
Exit	9	1	14	39	**63**
Total	11	7	36	87	**141**
Weekday PM Peak Hour:					
Enter	7	1	50	51	**109**
Exit	3	6	50	32	**91**
Total	10	7	100	83	**200**
Saturday Daily	78	12	1,648	1,118	**2,856**
Saturday Midday Peak Hour:					
Enter	6	0	64	52	**122**
Exit	5	1	62	50	**118**
Total	11	1	126	102	**240**

[a] ITE LUC 221 (Multi-family Housing (Mid-Rise)) in Dense Multi-Use Urban setting for 41 units.
[b] ITE LUC 710 (General Office Building) in Dense Multi-Use Urban setting for 8,430 SF
[c] ITE LUC 822 (Strip Retail Plaza (<40K)) in Dense Multi-Use Urban setting for 24,320 SF.
[d] ITE LUC 932 (High Turnover Sit-Down Restaurant) in General Urban / Suburban setting for 9,140 SF.
[e] Sum of Residential Trips, Office Trips, and Retail Trips.

[1] *Trip Generation Manual*, 11th Edition; Institute of Transportation Engineers; Washington, DC; September 2021.

As previously noted, the site currently contains a mix of residential, office, retail, and restaurant space that is currently generating traffic. Therefore, not all of the site-generated trips will be new to the area. GPI has estimated the trips generated by the former uses on the site based on ITE trip rates for LUC 221 (Multifamily Housing (Mid-Rise)), LUC 710 (General Office), LUC 822 (Strip Retail Plaza <40k)), LUC 931 (Fine-Dining Restaurant), and LUC 932 (High Turnover Sit-Down Restaurant). The trip rates for the office (LUC 710), retail (LUC 822) and residential (LUC 221) uses were based on Dense Multi-Use Urban settings, while the trip rates for the restaurant (LUC 931 and LUC 932) use were based on General Urban/Suburban settings due to the lack of available trip generation data within dense multi-use urban settings for this use. The resulting trip generation estimate is summarized in Table 3, and the detailed calculations are provided in the Appendix.

TABLE 3 – Existing Trip Generation Summary

Time Period/Direction	Residential Trips (LUC 221) [a]	Office Trips (LUC 710) [b]	Retail Trips (LUC 822) [c]	Restaurant Trips (LUC 931) [d]	Total Trips [e]
Weekday Daily	36	248	156	1,708	**2,148**
Weekday AM Peak Hour:					
Enter	0	28	4	63	**95**
Exit	3	4	2	52	**61**
Total	3	32	6	115	**156**
Weekday PM Peak Hour:					
Enter	2	5	9	93	**109**
Exit	1	28	9	55	**93**
Total	3	33	18	148	**202**
Saturday Daily	24	50	312	1,920	**2,306**
Saturday Midday Peak Hour:					
Enter	2	0	12	101	**115**
Exit	1	6	12	88	**107**
Total	3	6	24	189	**222**

[a] ITE LUC 221 (Multifamily Housing (Mid-Rise)) in Dense Multi-Use Urban setting for 12 dwelling units.
[b] ITE LUC 710 (General Office Building) in Dense Multi-Use Urban setting for 38,010 SF.
[c] ITE LUC 822 (Strip Retail Plaza (<40K)) in Dense Multi-Use Urban setting for 4,610 SF.
[d] Sum of ITE LUC 931 (Fine-Dining Restaurant) in General Urban/Suburban setting for 5,500 SF and ITE LUC 932 (High Turnover Sit-Down Restaurant) in General Urban/Suburban setting for 11,630 SF.
[e] Sum of Residential Trips, Office Trips, Retail Trips, and Restaurant Trips.

Table 4 provides a comparison of the trips generated by the proposed land uses to the trips generated by the former uses on the site.

TABLE 4 – Trip Generation Comparison

Time Period/Direction	Existing Trips [a]	Proposed Trips [b]	Net Increase in Trips [c]
Weekday Daily	2,148	1,978	**-170**
Weekday AM Peak Hour:			
Enter	95	78	**-17**
Exit	61	63	**2**
Total	156	141	**-15**
Weekday PM Peak Hour:			
Enter	109	109	**0**
Exit	93	91	**-2**
Total	202	200	**-2**
Saturday Daily	2,306	2,856	**550**
Saturday Midday Peak Hour:			
Enter	115	122	**7**
Exit	107	118	**11**
Total	222	240	**18**

[a] Total Existing Trips (From Table 3).
[b] Total Proposed Trips (From Table 4).
[c] Proposed Trips minus Existing Trips.

As shown in Table 4, the proposed redevelopment will result in a minimal increase in vehicle trips of 18 additional trips (7 entering and 11 exiting) during the Saturday midday peak hour. These increases in traffic volumes represent less than one additional vehicle every three minutes on downtown roadways and are anticipated to result in negligible impacts to traffic operations downtown. The proposed redevelopment will result in a net reduction in overall weekday daily trips and trips during the weekday AM and PM peak hours.

PARKING

As part of the project, a total of 21 car parking spaces and 36 bicycle parking spaces will be provided in the basement level parking structure for use by the residents. No on-site parking will be provided for the proposed retail and restaurant uses.

The site is located within the Downtown Overlay District, in close proximity to numerous municipal parking garages and on-street public parking. Based on Section 10.1115.21 of the Zoning Ordinance, non-residential uses within the Downtown Overlay District are not required to provide any parking. Therefore, no on-site parking will be provided for the proposed retail and restaurant uses. It is assumed that the office, retail and restaurant employees will walk, bike, or use public transit to work or park in the adjacent Hanover Street parking garage. Similarly, it is assumed that retail and restaurant patrons will either park in one of the municipal parking lots or utilize on-street parking spaces in the area.

Residential Parking

Section 10.1112.311 of the City of Portsmouth Zoning Ordinance requires:

- 0.5 parking spaces per unit for residential dwellings of less than 500 SF;
- 1.0 parking spaces per unit for residential dwellings of between 500 SF and 750 SF; and
- 1.3 parking spaces per unit for residential dwellings of greater than 750 SF.

The Project proposes to include a total of 2 units with 500-750 SF, and 38 units greater than 750 SF. Therefore, a total of 51.4 parking spaces are required to serve the proposed residential units.

In addition, Section 10.1112.312 of the Zoning Ordinance states that:

"In addition to the off-street parking spaces provided in accordance with Sec. 10.1112.311, any dwelling or group of dwellings on a lot containing more than 4 dwelling units shall provide one visitor parking space for every 5 dwelling units or portion thereof."

Therefore, a total of 8.0 visitor parking spaces would be required to meet zoning regulations, which would result in a total of 59.4 parking spaces required for the residential use.

The Project is located within Downtown Overlay District. Section 10.1115.23 of the Zoning Ordinance allows for a 4-space reduction from the requirements of Section 10.1115.21 for any uses located within the Downtown Overlay District. Applying this reduction would result in a total parking requirement of 55.4 parking spaces.

The Zoning Ordinance also allows for a reduction in parking requirements of 1.0 parking spaces for every six (6.0) bicycle parking spaces with a maximum reduction of 5 percent. As 36 bicycle parking spaces are proposed on the site, a reduction of up to six vehicle parking spaces could be applied. However, the reduction is limited to a maximum of 5 percent of the total parking requirement or 2.77 spaces. Therefore, a total of 53 parking spaces would be required to serve the proposed residential units based on the Zoning Ordinance.

As the proposed parking supply of 21 vehicle parking spaces will result in a deficit of 32 parking spaces as compared to the Zoning Ordinance requirement, a Conditional Use Permit will be required for this project for parking.

ITE Parking Demand Data

To assess the adequacy of the proposed parking supply to accommodate the parking demand generated by the proposed residential units, GPI reviewed parking demand generation rates contained in the ITE publication *Parking Generation Manual, 6th Edition*. ITE provides separate parking demand generation rates for studio and 1-bedroom units as compared to units with 2 or more bedrooms. Within a dense multi-use urban setting, studio and 1-bedroom units generate a peak parking demand of 0.28 spaces per unit based on Land Use Code (LUC) 218 (Multifamily Housing – 1 BR (Mid-Rise)). Similarly, within a dense multi-use urban setting, units with 2 or more bedrooms generate a peak parking demand of 0.93 spaces per unit based on LUC 221 (Multifamily Housing – 2+ BR (Mid-Rise)).

There are a total of 14 apartment units proposed as studio or one-bedroom units and 26 units proposed with 2 or more bedrooms. Therefore, the proposed residential development is anticipated to generate a peak parking demand of 28 parking spaces based on ITE parking demand data. As the development is proposed to provide 21 parking spaces, the proposed parking supply will result in a deficit of 7 vehicle parking spaces based on ITE parking demand data. These additional parking spaces can be accommodated within the adjacent Hanover Garage or other area parking garages. As shown in Figure 1,

there are seven public parking garages / lots withing 2,000 feet (10-minute walk) of the site, providing more than adequate parking for any overflow from the proposed on-site garage. In addition, the provision of 36 bicycle parking spaces is anticipated to offset the parking deficit based on the City's Zoning Ordinance that allows for a reduction in vehicle parking spaces of one space for every six bicycle parking spaces provided.

CONCLUSIONS

- The site is comprised of four lots on Tax Map 117, Parcels 12 - 15. Parcel 14 currently contains a 4-story mixed-use building with retail and restaurant space on the first floor and office and apartment space on the upper floors. Parcel 15 contains a private parking locate. Parcels 12 and 13 contain a mixed-use building with retail and restaurant space on the first and basement levels and office and apartment space on the upper levels. The project consists of renovating a portion of the existing building on Parcel 14 and constructing a 4-story addition to encompass the remainder of Parcels 14 and 15, and constructing basement-level parking. In addition, the building on Parcels 12 – 13 will be redeveloped to convert a substantial portion of the office space to retail space and residential apartment units. Access to the parking lot would be provided via a driveway on Haven Court to a vehicle elevator for access to the basement level. Upon completion, the Project would provide ±8,430 SF of office space, ±24,320 SF of retail space, ±9,140 SF of restaurant space, and 40 residential apartment units.

- The section of Congress Street between Market Square and Fleet Street experienced an average of 5.0 collisions per year over the three-year study period. Of the 15 crashes, three were single-vehicle crashes with a light pole and may have involved vehicles striking the light poles immediately adjacent to the angled parking spaces along the northerly side of Congress Street. Five of the collisions involved a collision with a pedestrian, three of which occurred late at night when visibility of pedestrians in the roadway may have been a factor. Only one of the pedestrian crashes occurred at the intersection with High Street and involved a pedestrian crossing outside of the crosswalk at night. The occurrence of collisions with pedestrians at night may be an indication that the crosswalk is not adequately lit due either to poor lighting or overgrown street trees blocking existing light poles.

- The section of Fleet Street between Congress Street and Hanover Street experienced an average of 2.0 collisions per year over the three-year study period. One of the collisions occurred with a parked vehicle near the intersection with Congress Street under dark conditions. Two of the collisions occurred late night in front of Gilley's Diner and an additional three collisions occurred in the evening at the driveway with Gilley's Diner. Fleet Street near Gilley's Diner is a narrow two-way roadway with a total 27-foot roadway width consisting of a 7.5-ft parking lane, a 10-ft southbound travel-lane and a 9.5-ft northbound travel-lane. The narrow roadway width, combined with parking along the west side of the roadway makes turning maneuvers in and out of Gilley's Diner parking lot difficult. In addition, the Hanover Street Garage and J.J. Newberry Buildings are located immediately adjacent to the roadway on either side of the parking lot for Gilley's Diner, and block sight lines for vehicles backing out of the parking spaces at Gilley's Diner.

- There were no collisions reported along Haven Court, High Street, or Ladd Street over the three-year study period.

- The proposed redevelopment will result in a minimal increase in vehicle trips of 18 additional trips (7 entering and 11 exiting) during the Saturday midday peak hour, which represents less than one additional vehicle every three minutes on downtown roadways and is anticipated to result in negligible impacts to traffic operations downtown. The proposed redevelopment will result in a net reduction in overall weekday daily trips and trips during the weekday AM and PM peak hours.

- A total of 21 vehicle parking spaces and 36 bicycle parking spaces are proposed within the basement level parking garage at #1 Congress Street. Based on the City's zoning regulations a total of 53 parking spaces would be required to serve the proposed residential uses within the Downtown Overlay District. Therefore, a Conditional Use Permit will be required to allow a reduction in parking supply for the proposed development. No on-site parking is required for office, retail and restaurant uses within the Downtown Overlay District.

- Although the zoning ordinance estimates a deficit of 32 vehicle parking spaces on the site, the proposed residential uses are anticipated to generate a peak parking demand of 28 parking spaces based on ITE parking demand generation rates for similar residential uses in dense multi-use urban settings. The proposed parking supply of 21 residential parking spaces will accommodate the majority of the parking demand. The additional seven vehicles can be accommodated within the adjacent Hanover Garage or other area parking facilities. In addition, the proposed 36 bicycle parking spaces will offset a 6-space deficit in vehicle parking spaces based on the City's zoning regulations allowing for a reduction in vehicle parking spaces of one space for every six bicycle parking spaces provided.

- APPENDIX

- ***NHDOT Crash Data***
- ***Trip Generation Calculations***

NHDOT CRASH DATA

FID	ACDYEAR_NU	CRASH_DATE	ACDDAY	ACDTIME	ACDSTREET	INTERSTREE	MILESFTFRO	NSEW_TO_IN	TYPE_OF_AC	FIXED_OBJE	LOCATION_F	NUMVEHICLE	TOTALFATAL	TOTALINJUR	PEDFATALS	PROPDAMAGE	INFONOTREP	SEVERITY	ROAD_ALIGN	ROAD_CONDI	SURFACE_CO	LIGHTING_D	WEATHER_DE	ROAD_DESIG	TRAFFIC_CO
414619	15009106	3/17/2015	TUE	2331	90 FLEET ST	62 CONGRESS ST	100	N	Parked Motor Vehicle		Intersection Related	2	0	0	0		X	Unknown	Straight and Level	Normal	Dry	Dark-Street Light On	Clear	Not Physically Divided (2 Way Traffic)	Visible Road Markings
466799	16009879	4/30/2016	SAT	1955	175 FLEET ST	HANOVER ST	150	S	Other Motor Vehicle		Along the Road	2	0	0	0		X	No Apparent Injury	Straight and Level	Normal	Dry	Dark-Street Light On	Clear	Not Physically Divided (2 Way Traffic)	Visible Road Markings
481652	16014951	6/27/2016	MON	1436	174 FLEET ST	HANOVER ST	100	S	Other Motor Vehicle		Along the Road	2	0	0	0		X	No Apparent Injury	Unknown	Normal	Dry	Daylight	Clear		None
483078	16019691	8/6/2016	SAT	120	175 FLEET ST		0		Other Motor Vehicle		Along Road at Driveway Access	1	0	0	0		X	Unknown	Straight and Level	Normal	Unknown	Dark-Street Light On	Unknown	Not Physically Divided (2 Way Traffic)	None
488681	16019675	8/4/2016	THU	53	175 FLEET ST		0		Other Motor Vehicle		Along the Road	2	0	1	0			Non-Incapacitating	Unknown	Normal	Dry	Dark-Street Light On	Clear		None
496398	16019655	8/20/2016	SAT	1453	175 FLEET ST		0		Other Motor Vehicle		Along the Road	2	0	0	0		X	No Apparent Injury	Straight and Level	Normal	Dry	Daylight	Clear	Not Physically Divided (2 Way Traffic)	None

FID	CRASH_DATE	ACDDAY	ACDTIME	ACDSTREET	INTERSTREE	MILESFTFR	NSEW_TO	TYPE_OF_AC	FIXED_OBJE	LOCATION_F	NUMVEHICLE	TOTALFATAL	TOTALINJUR	PEDFATALS	SEVERITY	ROAD_ALIGN	ROAD_CONDI	SURFACE_CO	LIGHTING_D	WEATHER_DE	TRAFFIC_CO
417934	6/22/2015	MON	1558	151 HIGH ST	HIGH ST AND DEER ST	150	E	Other Motor Vehicle		Along the Road	2	0	0	0	No Apparent Injury	Straight and Level	Normal	Dry	Daylight	Clear	Lane Control
434430	8/13/2015	THU	933	75 CONGRESS ST	FLEET ST	10	S	Fixed Object	Light Pole	Along the Road	1	0	0	0	Unknown	Straight and Level	Normal	Dry	Daylight	Clear	Visible Road Markings
455142	11/4/2015	WED	1443	1 DANIEL ST	1 MARKET SQ	0	AT	Pedestrian		At Intersection	1	0	1	0	No Apparent Injury	Other	Normal	Dry	Daylight	Clear	Stop Sign
466467	5/17/2016	TUE	1242	5 MARKET SQ	CONGRESS ST	10	N	Other Motor Vehicle		Along the Road	2	0	0	0	No Apparent Injury	Straight and Level	Normal	Dry	Daylight	Clear	Lane Control
488867	6/16/2016	TUE	2302	5 MARKET SQ	PLEASANT ST	0	AT	Pedestrian		Intersection Related	3	0	2	0	Non_Incapacitating	Straight and Level	Normal	Dry	Dark-Street Light On	Clear	Visible Road Markings
481938	7/17/2016	SUN	1444	62 CONGRESS ST	FLEET ST	20	W	Other Motor Vehicle		Unknown	2	0	0	0	No Apparent Injury	Unknown	Normal	Dry	Daylight	Clear	None
482191	7/19/2016	TUE	1356	10 PLEASANT ST	14 MARKET SQ	0	AT	Other Motor Vehicle		Along the Road	2	0	0	0	No Apparent Injury	Straight and Level	Normal	Dry	Daylight	Clear	None
482892	10/25/2016	TUE	1638	29 CONGRESS ST		0		Other Motor Vehicle		Unknown	2	0	0	0	Non_Incapacitating	Unknown	Normal	Dry	Daylight	Clear	Yield Sign
469157	11/8/2016	TUE	1934	14 MARKET SQ		0		Other Motor Vehicle		Along the Road	2	0	0	0	No Apparent Injury	Straight and Level	Normal	Dry	Daylight	Clear	Lane Control
499903	11/20/2016	SUN	1251	75 CONGRESS ST	FLEET ST	40	W	Pedestrian		Intersection Related	2	0	1	0	Non_Incapacitating	Straight and Level	Normal	Dry	Daylight	Clear	Traffic Signals
481331	12/8/2016	THU	2018	5 CONGRESS ST	HIGH ST	0	AT	Pedestrian		At Intersection	2	0	0	0	No Apparent Injury	Straight and Level	Normal	Dry	Dark-Street Light On	Clear	Visible Road Markings
469809	12/12/2016	MON	1612	40 PLEASANT ST		0		Other Motor Vehicle		Unknown	2	0	0	0	No Apparent Injury	Unknown	Normal	Dry	Dusk	Clear	None
479143	12/22/2016	THU	1426	8 CONGRESS ST		0		Fixed Object	Light Pole	At Intersection	1	0	0	0	No Apparent Injury	Unknown	Normal	Wet	Daylight	Snow	None
484255	12/24/2016	SAT	1	5 MARKET SQ	1 PLEASANT ST	0	AT	Pedestrian		Intersection Related	2	0	1	0	Possible	Straight and Level	Normal	Wet	Dark-Street Light On	Cloudy	Stop Sign
477050	3/28/2017	TUE	833	6 CONGRESS ST	1 CHURCH ST	0	AT	Fixed Object	Light Pole	Along the Road	1	0	0	0	Unknown	Straight and Level	Normal	Wet	Unknown	Cloudy	None

TRIP-GENERATION CALCULATIONS

Proposed Use	Size	Variable
Residential (LUC 221)	40	Units
Office (LUC 710)	8430	SF
Retail (LUC 822)	24320	SF
Restaurant (LUC 931)	0	SF
Restaurant (LUC 932)	9140	SF

Existing Uses	Size	Variable
Residential (LUC 221)	12	Units
Office (LUC 710)	38010	SF
Retail (LUC 822)	4610	SF
Restaurant (LUC 931)	5500	SF
Restaurant (LUC 932)	11630	SF

Time Period / Direction	Proposed Trips					First Floor Office					Net Change in Trips
	Office LUC 710	Residential LUC 221	Retail LUC 822	Restaurant LUC 930	Total Trips	Office LUC 710	Residential LUC 221	Retail LUC 822	Restaurant LUC 930	Total Trips	
Weekday Daily	56	118	824	980	1,978	248	36	156	1,708	2,148	-170
Weekday AM Peak Hour											
Enter	6	2	22	48	78	28	0	4	63	95	-17
Exit	1	9	14	39	63	4	3	2	52	61	2
Total	7	11	36	87	141	32	3	6	115	156	-15
Weekday PM Peak Hour											
Enter	1	7	50	51	109	5	2	9	93	109	0
Exit	6	3	50	32	91	28	1	9	55	93	-2
Total	7	10	100	83	200	33	3	18	148	202	-2
Saturday Daily	12	78	1,648	1,118	2,856	50	24	312	1,920	2,306	550
Saturday Midday Peak Hour											
Enter	0	6	64	52	122	0	2	12	101	115	7
Exit	1	5	62	50	118	6	1	12	88	107	11
Total	1	11	126	102	240	6	3	24	189	222	18

Institute of Transportation Engineers (ITE)

Land Use Code (LUC) 221 - Multifamily Housing (Mid-Rise)

Dense Multi-Use Urban

Average Vehicle Trips Ends vs: Dwelling Units

Independent Variable (X): 40

AVERAGE WEEKDAY DAILY

T = 2.93 * (X)
T = 2.93 * 40
T = 117.20
T = 118 vehicle trips
with 50% (59 vpd) entering and 50% (59 vpd) exiting.

WEEKDAY MORNING PEAK HOUR OF ADJACENT STREET TRAFFIC

T = 0.28 * (X)
T = 0.28 * 40
T = 11.20
T = 11 vehicle trips
with 14% (2 vph) entering and 86% (9 vph) exiting.

WEEKDAY EVENING PEAK HOUR OF ADJACENT STREET TRAFFIC

T = 0.26 * (X)
T = 0.26 * 40
T = 10.40
T = 10 vehicle trips
with 72% (7 vph) entering and 28% (3 vph) exiting.

SATURDAY DAILY

T = 1.95 * (X)
T = 1.95 * 40
T = 78.00
T = 78 vehicle trips
with 50% (39 vpd) entering and 50% (39 vpd) exiting.

SATURDAY PEAK HOUR OF GENERATOR

T = 0.27 * (X)
T = 0.27 * 40
T = 10.80
T = 11 vehicle trips
with 51% (6 vph) entering and 49% (5 vph) exiting.

Institute of Transportation Engineers (ITE)

Land Use Code (LUC) 710 - General Office Building

Dense Multi-Use Urban

Average Vehicle Trips Ends vs: 1000 Sq. Feet Gross Floor Area

Independent Variable (X): 8.430

AVERAGE WEEKDAY DAILY

$$\frac{\text{ITE LUC 710 Weekday Trip Rate (U)}}{\text{ITE LUC 710 Weekday Trip Rate (S)}} = \frac{\text{ITE LUC 710 Weekday Evening Trip Rate (U)}}{\text{ITE LUC 710 Weekday Evening Trip Rate (S)}}$$

$$\frac{(Y)}{10.84} = \frac{0.87}{1.44} \qquad Y = 6.55$$

T = Y * 8.430
T = 55.21
T = 56 vehicle trips
with 50% (28 vpd) entering and 50% (28 vpd) exiting.

WEEKDAY MORNING PEAK HOUR OF ADJACENT STREET TRAFFIC

T = 0.84 * (X)
T = 0.84 * 8.430
T = 7.08
T = 7 vehicle trips
with 87% (6 vph) entering and 13% (1 vph) exiting.

WEEKDAY EVENING PEAK HOUR OF ADJACENT STREET TRAFFIC

T = 0.87 * (X)
T = 0.87 * 8.430
T = 7.33
T = 7 vehicle trips
with 16% (1 vph) entering and 84% (6 vph) exiting.

SATURDAY DAILY

$$\frac{\text{ITE LUC 710 Saturday Trip Rate (U)}}{\text{ITE LUC 710 Saturday Trip Rate (S)}} = \frac{\text{ITE LUC 710 Weekday Evening Trip Rate (U)}}{\text{ITE LUC 710 Weekday Evening Trip Rate (S)}}$$

$$\frac{(Y)}{2.21} = \frac{0.87}{1.44} \qquad Y = 1.34$$

T = Y * 8.430
T = 1.34 * 8.430
T = 11.26
T = 12 vehicle trips
with 50% (6 vpd) entering and 32% (6 vpd) exiting.

SATURDAY PEAK HOUR OF GENERATOR

T = 0.17 * (X)
T = 0.17 * 8.430
T = 1.43
T = 1 vehicle trips
with 8% (0 vph) entering and 92% (1 vph) exiting.

Institute of Transportation Engineers (ITE)

Land Use Code (LUC) 822 - Strip Retail Plaza (<40k)

Dense Multi-Use Urban

Average Vehicle Trips Ends vs: 1000 Sq. Ft. Gross Floor Area

Independent Variable (X): 24.320

AVERAGE WEEKDAY DAILY

ITE LUC 821 (Dense Multi-Use Urban) Weekday PM Trip Rate / ITE LUC 821 (General Urban/Suburban) Weekday PM Trip Rate = ITE LUC 822 (Dense Multi-Use Urban) Weekday Daily Trip Rate / ITE LUC 822 (General Urban/Suburban) Weekday Daily Trip Rate

$$\frac{3.23}{5.19} = \frac{(Y)}{54.45} \qquad Y = 33.89$$

T = Y * 24.320

T = 824.20

T = 824 vehicle trips

with 500% (412 vpd) entering and 50% (412 vpd) exiting.

(same distribution split as ITE LUC 822 (General Urban/Suburban) during the Weekday Daily)

WEEKDAY MORNING PEAK HOUR OF ADJACENT STREET TRAFFIC

ITE LUC 821 (Dense Multi-Use Urban) Weekday PM Trip Rate / ITE LUC 821 (General Urban/Suburban) Weekday PM Trip Rate = ITE LUC 822 (Dense Multi-Use Urban) Weekday AM Trip Rate / ITE LUC 822 (General Urban/Suburban) Weekday AM Trip Rate

$$\frac{3.23}{5.19} = \frac{(Y)}{2.36} \qquad Y = 1.47$$

T = Y * 24.320

T = 35.75

T = 36 vehicle trips

with 60% (22 vpd) entering and 40% (14 vpd) exiting.

(same distribution split as ITE LUC 822 (General Urban/Suburban) during the Weekday AM)

WEEKDAY EVENING PEAK HOUR OF ADJACENT STREET TRAFFIC

ITE LUC 821 (Dense Multi-Use Urban) Weekday PM Trip Rate / ITE LUC 821 (General Urban/Suburban) Weekday PM Trip Rate = ITE LUC 822 (Dense Multi-Use Urban) Weekday PM Trip Rate / ITE LUC 822 (General Urban/Suburban) Weekday PM Trip Rate

$$\frac{3.23}{5.19} = \frac{(Y)}{6.59} \qquad Y = 4.10$$

T = Y * 24.320

T = 99.71

T = 100 vehicle trips

with 50% (50 vpd) entering and 50% (50 vpd) exiting.

(same distribution split as ITE LUC 822 (General Urban/Suburban) during the Weekday PM)

SATURDAY DAILY

ITE LUC 821 (General Urban/Suburban) Saturday Daily Trip Rate / ITE LUC 821 (General Urban/Suburban) Saturday Peak Hour Trip Rate = ITE LUC 822 (Dense Multi-Use Urban) Saturday Daily Trip Rate / ITE LUC 822 (Dense Multi-Use Urban) Saturday Peak Hour Trip Rate

$$\frac{81.07}{6.22} = \frac{(Y)}{5.20} \qquad Y = 67.78$$

T = Y * 24.320

T = 1648.41

T = 1,648 vehicle trips

with 50% (824 vpd) entering and 50% (824 vpd) exiting.

(same distribution split as ITE LUC 821 during the Saturday Daily)

SATURDAY PEAK HOUR OF GENERATOR

ITE LUC 821 (Dense Multi-Use Urban) Saturday Midday Trip Rate / ITE LUC 821 (General Urban/Suburban) Saturday Midday Trip Rate = ITE LUC 822 (Dense Multi-Use Urban) Saturday Midday Trip Rate / ITE LUC 822 (General Urban/Suburban) Saturday Midday Trip Rate

$$\frac{4.92}{6.22} = \frac{(Y)}{6.57} \qquad Y = 5.20$$

T = Y * 24.320

T = 126.46

T = 126 vehicle trips

with 51% (64 vpd) entering and 49% (62 vpd) exiting.

(same distribution split as ITE LUC 822 (General Urban/Suburban) during the Saturday Midday)

Institute of Transportation Engineers (ITE)

Land Use Code (LUC) 932 - High Turnover Sit-Down Restaurant

General Urban / Suburban

Average Vehicle Trips Ends vs: 1,000 Sq. Ft. Gross Floor Area

Independent Variable (X): 9.140

AVERAGE WEEKDAY DAILY

T = 107.2 * (X)
T = 107.20 * 9.140
T = 979.81
T = 980 vehicle trips
with 50% (490 vpd) entering and 50% (490 vpd) exiting.

WEEKDAY MORNING PEAK HOUR OF ADJACENT STREET TRAFFIC

T = 9.57 * (X)
T = 9.57 * 9.140
T = 87.47
T = 87 vehicle trips
with 55% (48 vph) entering and 45% (39 vph) exiting.

WEEKDAY EVENING PEAK HOUR OF ADJACENT STREET TRAFFIC

T = 9.05 * (X)
T = 9.05 * 9.140
T = 82.72
T = 83 vehicle trips
with 61% (51 vph) entering and 39% (32 vph) exiting.

SATURDAY DAILY

T = 122.40 * (X)
T = 122.40 * 9.140
T = 1118.74
T = 1,118 vehicle trips
with 50% (559 vpd) entering and 50% (559 vpd) exiting.

SATURDAY PEAK HOUR OF GENERATOR

T = 11.19 * (X)
T = 11.19 * 9.140
T = 102.28
T = 102 vehicle trips
with 51% (52 vph) entering and 49% (50 vph) exiting.

Institute of Transportation Engineers (ITE)

Land Use Code (LUC) 221 - Multifamily Housing (Mid-Rise)

Dense Multi-Use Urban

Average Vehicle Trips Ends vs: Dwelling Units

Independent Variable (X): 12

AVERAGE WEEKDAY DAILY

T = 2.93 * (X)
T = 2.93 * 12
T = 35.16
T = 36 vehicle trips
with 50% (18 vpd) entering and 50% (18 vpd) exiting.

WEEKDAY MORNING PEAK HOUR OF ADJACENT STREET TRAFFIC

T = 0.28 * (X)
T = 0.28 * 12
T = 3.36
T = 3 vehicle trips
with 14% (0 vph) entering and 86% (3 vph) exiting.

WEEKDAY EVENING PEAK HOUR OF ADJACENT STREET TRAFFIC

T = 0.26 * (X)
T = 0.26 * 12
T = 3.12
T = 3 vehicle trips
with 72% (2 vph) entering and 28% (1 vph) exiting.

SATURDAY DAILY

T = 1.95 * (X)
T = 1.95 * 12
T = 23.40
T = 24 vehicle trips
with 50% (12 vpd) entering and 50% (12 vpd) exiting.

SATURDAY PEAK HOUR OF GENERATOR

T = 0.27 * (X)
T = 0.27 * 12
T = 3.24
T = 3 vehicle trips
with 51% (2 vph) entering and 49% (1 vph) exiting.

Institute of Transportation Engineers (ITE)

Land Use Code (LUC) 710 - General Office Building

Dense Multi-Use Urban

Average Vehicle Trips Ends vs: 1000 Sq. Feet Gross Floor Area

Independent Variable (X): 38.010

AVERAGE WEEKDAY DAILY

$$\frac{\text{ITE LUC 710 Weekday Trip Rate (U)}}{\text{ITE LUC 710 Weekday Trip Rate (S)}} = \frac{\text{ITE LUC 710 Weekday Evening Trip Rate (U)}}{\text{ITE LUC 710 Weekday Evening Trip Rate (S)}}$$

$$\frac{(Y)}{10.84} = \frac{0.87}{1.44} \qquad Y = 6.55$$

T = Y * 38.010
T = 248.93
T = 248 vehicle trips
with 50% (124 vpd) entering and 50% (124 vpd) exiting.

WEEKDAY MORNING PEAK HOUR OF ADJACENT STREET TRAFFIC

T = 0.84 * (X)
T = 0.84 * 38.010
T = 31.93
T = 32 vehicle trips
with 87% (28 vph) entering and 13% (4 vph) exiting.

WEEKDAY EVENING PEAK HOUR OF ADJACENT STREET TRAFFIC

T = 0.87 * (X)
T = 0.87 * 38.010
T = 33.07
T = 33 vehicle trips
with 16% (5 vph) entering and 84% (28 vph) exiting.

SATURDAY DAILY

$$\frac{\text{ITE LUC 710 Saturday Trip Rate (U)}}{\text{ITE LUC 710 Saturday Trip Rate (S)}} = \frac{\text{ITE LUC 710 Weekday Evening Trip Rate (U)}}{\text{ITE LUC 710 Weekday Evening Trip Rate (S)}}$$

$$\frac{(Y)}{2.21} = \frac{0.87}{1.44} \qquad Y = 1.34$$

T = Y * 38.010
T = 1.34 * 38.010
T = 50.75
T = 50 vehicle trips
with 50% (25 vpd) entering and 32% (25 vpd) exiting.

SATURDAY PEAK HOUR OF GENERATOR

T = 0.17 * (X)
T = 0.17 * 38.010
T = 6.46
T = 6 vehicle trips
with 8% (0 vph) entering and 92% (6 vph) exiting.

Institute of Transportation Engineers (ITE)

Land Use Code (LUC) 822 - Strip Retail Plaza (<40k)

Dense Multi-Use Urban

Average Vehicle Trips Ends vs: 1000 Sq. Ft. Gross Floor Area

Independent Variable (X): 4.610

AVERAGE WEEKDAY DAILY

ITE LUC 821 (Dense Multi-Use Urban) Weekday PM Trip Rate / ITE LUC 821 (General Urban/Suburban) Weekday PM Trip Rate = ITE LUC 822 (Dense Multi-Use Urban) Weekday Daily Trip Rate / ITE LUC 822 (General Urban/Suburban) Weekday Daily Trip Rate

3.23 / 5.19 = (Y) / 54.45 Y = 33.89

T = Y * 4.610

T = 156.23

T = 156 vehicle trips

with 500% (78 vpd) entering and 50% (78 vpd) exiting.

(same distribution split as ITE LUC 822 (General Urban/Suburban) during the Weekday Daily)

WEEKDAY MORNING PEAK HOUR OF ADJACENT STREET TRAFFIC

ITE LUC 821 (Dense Multi-Use Urban) Weekday PM Trip Rate / ITE LUC 821 (General Urban/Suburban) Weekday PM Trip Rate = ITE LUC 822 (Dense Multi-Use Urban) Weekday AM Trip Rate / ITE LUC 822 (General Urban/Suburban) Weekday AM Trip Rate

3.23 / 5.19 = (Y) / 2.36 Y = 1.47

T = Y * 4.610

T = 6.78

T = 6 vehicle trips

with 60% (4 vpd) entering and 40% (2 vpd) exiting.

(same distribution split as ITE LUC 822 (General Urban/Suburban) during the Weekday AM)

WEEKDAY EVENING PEAK HOUR OF ADJACENT STREET TRAFFIC

ITE LUC 821 (Dense Multi-Use Urban) Weekday PM Trip Rate / ITE LUC 821 (General Urban/Suburban) Weekday PM Trip Rate = ITE LUC 822 (Dense Multi-Use Urban) Weekday PM Trip Rate / ITE LUC 822 (General Urban/Suburban) Weekday PM Trip Rate

3.23 / 5.19 = (Y) / 6.59 Y = 4.10

T = Y * 4.610

T = 18.90

T = 18 vehicle trips

with 50% (9 vpd) entering and 50% (9 vpd) exiting.

(same distribution split as ITE LUC 822 (General Urban/Suburban) during the Weekday PM)

SATURDAY DAILY

ITE LUC 821 (General Urban/Suburban) Saturday Daily Trip Rate / ITE LUC 821 (General Urban/Suburban) Saturday Peak Hour Trip Rate = ITE LUC 822 (Dense Multi-Use Urban) Saturday Daily Trip Rate / ITE LUC 822 (Dense Multi-Use Urban) Saturday Peak Hour Trip Rate

81.07 / 6.22 = (Y) / 5.20 Y = 67.78

T = Y * 4.610

T = 312.47

T = 312 vehicle trips

with 50% (156 vpd) entering and 50% (156 vpd) exiting.

(same distribution split as ITE LUC 821 during the Saturday Daily)

SATURDAY PEAK HOUR OF GENERATOR

ITE LUC 821 (Dense Multi-Use Urban) Saturday Midday Trip Rate / ITE LUC 821 (General Urban/Suburban) Saturday Midday Trip Rate = ITE LUC 822 (Dense Multi-Use Urban) Saturday Midday Trip Rate / ITE LUC 822 (General Urban/Suburban) Saturday Midday Trip Rate

4.92 / 6.22 = (Y) / 6.57 Y = 5.20

T = Y * 4.610

T = 23.97

T = 24 vehicle trips

with 51% (12 vpd) entering and 49% (12 vpd) exiting.

(same distribution split as ITE LUC 822 (General Urban/Suburban) during the Saturday Midday)

Institute of Transportation Engineers (ITE)
Land Use Code (LUC) 931 - Fine Dining Restaurant
General Urban / Suburban

Average Vehicle Trips Ends vs: 1,000 Sq. Ft. Gross Floor Area
Independent Variable (X): 5.500

AVERAGE WEEKDAY DAILY

T = 83.84 * (X)
T = 83.84 * 5.500
T = 461.12
T = 462 vehicle trips
with 50% (231 vpd) entering and 50% (231 vpd) exiting.

WEEKDAY MORNING PEAK HOUR OF ADJACENT STREET TRAFFIC

T = 0.73 * (X)
T = 0.73 * 5.500
T = 4.02
T = 4 vehicle trips
with 55% (2 vph) entering and 45% (2 vph) exiting.
(same distribution split as ITE LUC 932 during the Weekday AM)

WEEKDAY EVENING PEAK HOUR OF ADJACENT STREET TRAFFIC

T = 7.80 * (X)
T = 7.8 * 5.500
T = 42.90
T = 43 vehicle trips
with 67% (29 vph) entering and 33% (14 vph) exiting.

SATURDAY DAILY

T = 90.04 * (X)
T = 90.04 * 5.500
T = 495.22
T = 496 vehicle trips
with 50% (248 vpd) entering and 50% (248 vpd) exiting.

SATURDAY PEAK HOUR OF GENERATOR

T = 10.68 * (X)
T = 10.68 * 5.500
T = 58.74
T = 59 vehicle trips
with 59% (35 vph) entering and 41% (24 vph) exiting.

Institute of Transportation Engineers (ITE)

Land Use Code (LUC) 932 - High Turnover Sit-Down Restaurant

General Urban / Suburban

Average Vehicle Trips Ends vs: 1,000 Sq. Ft. Gross Floor Area
Independent Variable (X): 11.630

AVERAGE WEEKDAY DAILY

T = 107.2 * (X)
T = 107.20 * 11.630
T = 1246.74
T = 1,246 vehicle trips
with 50% (623 vpd) entering and 50% (623 vpd) exiting.

WEEKDAY MORNING PEAK HOUR OF ADJACENT STREET TRAFFIC

T = 9.57 * (X)
T = 9.57 * 11.630
T = 111.30
T = 111 vehicle trips
with 55% (61 vph) entering and 45% (50 vph) exiting.

WEEKDAY EVENING PEAK HOUR OF ADJACENT STREET TRAFFIC

T = 9.05 * (X)
T = 9.05 * 11.630
T = 105.25
T = 105 vehicle trips
with 61% (64 vph) entering and 39% (41 vph) exiting.

SATURDAY DAILY

T = 122.40 * (X)
T = 122.40 * 11.630
T = 1423.51
T = 1,424 vehicle trips
with 50% (712 vpd) entering and 50% (712 vpd) exiting.

SATURDAY PEAK HOUR OF GENERATOR

T = 11.19 * (X)
T = 11.19 * 11.630
T = 130.14
T = 130 vehicle trips
with 51% (66 vph) entering and 49% (64 vph) exiting.

November 15, 2024

City of Portsmouth, NH
Planning Department
1 Junkins Ave., 3rd Floor
Portsmouth, NH 03801

RE: Application for Conditional Use Permit for EV Charging Level B EV Charging Station in existing Whole Foods Parking Lot
Address: 1600 Woodbury Ave.

To Whom It May Concern,

Please accept this letter as a narrative describing the proposed application and how it addresses the approval criteria in Section 10.243 of the Zoning Ordinance for Conditional Use Permits.

AGI proposes to install new EV charging equipment in the existing Whole Foods parking lot at 1600 Woodbury Ave. The property is owned by Durgin Square, LLC, and it is zoned G1 – Gateway Neighborhood Mixed Use Corridor. Adding the availability of EV charging to this area will be in keeping with the intent of the G1 zoning district to facilitate a high-quality pedestrian environment.

Being installed are (6) dual L3 EV Charging dispensers for a total of (12) EV charging stalls. Also proposed are (3) 16.5'x5' canopy structures to provide coverage for the dispensers. The supporting equipment will consist of (1) switchboard, (1) CT cabinet with meter socket, (1) utility rack, and (1) new transformer (by Utility).

The following addresses the approval criteria in Section 10.243 of the Zoning Ordinance:

10.243.21 The proposed EV charging equipment will be compatible with the existing site's surroundings, as well as the adjacent and nearby properties. The proposed use will be an accessory to the existing principal use of the parking lot and surrounding commercial retail business. The availability of EV charging in this location will complement and enhance the character of surrounding development.

10.243.22 New electric service is being installed by the Utility to serve the proposed EV charging equipment.

10.243.23 The existing site and surrounding streets will maintain adequate vehicular and pedestrian infrastructure to serve the proposed use consistent with the City's Master Plan.

10.243.24 The proposed EV charging station will not have significant adverse impacts on abutting and surrounding properties. There will not be any additional traffic, noise, odors, vibrations, dust, or fumes due to the proposed use. There will be

7171 WEST 95TH STREET, SUITE 600
OVERLAND PARK, KANSAS 66212
p 913.438.7700
f 913.438.7777
ssc.us.com

lighting added, but it will have minimal impacts on surrounding properties. A photometric plan has been completed and submitted with the plans.

10.243.25 The proposed EV charging station will not have significant adverse impacts on any natural or scenic resources surrounding the site.

10.243.26 The proposed EV charging station will not cause or contribute to a significant decline in property values of adjacent properties.

I respectfully request the Planning Board to approve this Conditional Use Permit based on the criteria above and the demonstrated benefits to the community. Please contact me if you have any questions or concerns.

Thank you,

Emily Roseberry
Permitting Coordinator
SSC, Inc.
7171 W. 95th Street, Suite 600
Overland Park, KS 66212
O: 913-438-7700 ext. 2272
eroseberry@ssc.us.com

Docusign Envelope ID: 1C4F2B64-D77B-41F4-BC3F-6BCF8F1E1FE7

APPLICANT SITE NAME:

WHOLE FOOD (PORTSMOUTH)

PROJECT:

CHARGING STATION ADDITION

DRAWING DESCRIPTION:

FINAL CD100

AERIAL MAP

SITE INFORMATION

SITE ADDRESS: 1600 WOODBURY AVE
PORTSMOUTH, NH 03801

COUNTY: ROCKINGHAM

PROPERTY OWNER: DURGIN SQUARE, LLC.
CLIFFORD LONG
1600 WOODBURY AVE.
PORTSMOUTH, NH 03801
(617) 462-1200

SITE INFORMATION:
LATITUDE: 43° 05' 23.05" N (NAD 83)
LONGITUDE: 70° 47' 33.07" W (NAD 83)
GROUND ELEV: 63.0' AMSL

APPLICANT: AGI
5514 RIO VISTA DRIVE
CLEARWATER, FL 33760
(800) 877-7868 ex. 4520

UTILITY COMPANY: UNITIL

APN: 08178-0238-0016-0000

CONSULTING TEAM

ENGINEERING:
SSC, INC.
7171 WEST 95TH STREET, SUITE 600
OVERLAND PARK, KANSAS 66212
PHONE: (913) 438-7700
FAX: (913) 438-7777

SURVEY:
ODONE SURVEY & MAPPING
291 MAIN STREET, SUITE 5
NORTHBOROUGH, MA 01532
PHONE: (508) 351-6022
FAX: (508) 351-6633

STRUCTURAL:
ARCHITECTURAL GRAPHICS INC.
2655 INTERNATIONAL PARKWAY
VIRGINIA BEACH, VIRGINIA 23452
PHONE: (615) 329-1300

LIGHTING:
AGI, INC.
5514 RIO VISTA DRIVE
CLEARWATER, FLORIDA 33760
PHONE: (800) 877-7868, ex. 4520

DRAWING INDEX

SHEET NO.	SHEET TITLE
T-1.0	TITLE SHEET
	SURVEY (BY OTHERS)
C-1.0	OVERALL SITE & ZONING PLAN
C-1.1	EXISTING SITE PLAN
C-1.2	ENLARGED SITE PLAN & ELEVATION
C-1.3	OPEN SPACE & VEGETATION PLAN
C-1.4	EROSION CONTROL PLAN
C-2.0	FOUNDATION PLANS (1 OF 2)
C-2.1	FOUNDATION PLANS (2 OF 2)
C-3.0	EQUIPMENT DETAILS (1 OF 3)
C-3.1	EQUIPMENT DETAILS (2 OF 3)
C-3.2	EQUIPMENT DETAILS (3 OF 3)
E-1.0	UTILITY PLAN
E-1.1	ENLARGED UTILITY PLAN
E-2.0	ELECTRICAL ONE-LINE DIAGRAM
E-2.1	PANEL SCHEDULE
E-3.0	ELECTRICAL DETAILS (1 OF 2)
E-3.0	ELECTRICAL DETAILS (2 OF 2)
G-1.0	GROUNDING DETAILS
SP-1.0	SPECIFICATIONS (1 OF 5)
SP-1.1	SPECIFICATIONS (2 OF 5)
SP-1.2	SPECIFICATIONS (3 OF 5)
SP-2.0	SPECIFICATIONS (4 OF 5)
SP-2.1	SPECIFICATIONS (5 OF 5)
	EQUIPMENT SPECIFICATIONS (BY OTHERS)
	PHOTOMETRIC SPECIFICATIONS (BY OTHERS)
	CANOPY STRUCTURAL ANALYSIS (BY OTHERS)

PROJECT DESCRIPTION

- INSTALL (6) DC400KW DISPENSERS
- INSTALL (1) UTILITY TRANSFORMER (BY UTILITY COMPANY)
- INSTALL (1) 3000A 480Y/277V SWITCHBOARD "MDP"
- INSTALL (1) 15KVA TRANSFORMER
- INSTALL (1) CT CABINET W/ METER
- INSTALL (1) MINI POWER-ZONE
- INSTALL (1) SITE COMMS BOX
- INSTALL (22) BOLLARDS
- INSTALL (2) EV SIGNAGE
- INSTALL (12) WHEELSTOPS

JURISDICTION COMPLIANCE

ALL WORK SHALL BE PERFORMED AND MATERIALS INSTALLED IN ACCORDANCE WITH THE CURRENT EDITIONS OF THE FOLLOWING CODES AS ADOPTED BY THE LOCAL GOVERNING AUTHORITIES. NOTHING IN THESE PLANS IS TO BE CONSTRUED TO PERMIT WORK NOT CONFORMING TO THESE CODES.

1. INTERNATIONAL BUILDING CODE
2. INTERNATIONAL MECHANICAL CODE
3. ANSI/TIA-222 STRUCTURAL STANDARD
4. NFPA 780 – LIGHTNING PROTECTION CODE
5. NATIONAL ELECTRICAL CODE

811 Know what's below. Call before you dig. www.call811.com

THE UTILITIES AS SHOWN ON THIS SET OF DRAWINGS WERE DEVELOPED FROM THE INFORMATION AVAILABLE. THE INFORMATION PROVIDED IS NOT IMPLIED NOR INTENDED TO BE THE COMPLETE INVENTORY OF UTILITIES IN THIS AREA. IT IS THE CONTRACTOR'S RESPONSIBILITY TO VERIFY THE LOCATION OF ALL UTILITIES (WHETHER SHOWN OR NOT) AND PROTECT SAID UTILITIES FROM ANY DAMAGE CAUSED BY CONTRACTOR'S ACTIVITIES.

STAMP:

11/18/2024
STATE OF NEW HAMPSHIRE
SHELTON DOUGLAS KEISLING
No. 18260
LICENSED
PROFESSIONAL ENGINEER
EF94D8A5B80B407...

ENGINEERING LICENSE:
STATE OF NEW HAMPSHIRE
PE CERTIFICATE OF AUTHORIZATION # 01191

ENGINEER:		PE#:	DISCIPLINE:	
SDK	SHELTON D. KEISLING	18260	ELECTRICAL	E
TMS	TERRANCE M. SUPER	10926	ELECTRICAL	E

PLANS PREPARED FOR:

PLANS PREPARED BY:

DRAWING NOTICE:
THIS DRAWING HAS NOT BEEN PUBLISHED AND IS THE SOLE PROPERTY OF SSC, INC. AND IS LENT TO THE BORROWER FOR THEIR CONFIDENTIAL USE ONLY, AND IN CONSIDERATION OF THE LOAN OF THIS DRAWING, THE BORROWER PROMISES AND AGREES TO RETURN IT UPON REQUEST AND AGREES THAT IT WILL NOT BE REPRODUCED, COPIED, LENT OR OTHERWISE DISPOSED OF DIRECTLY OR INDIRECTLY, NOR USED FOR ANY PURPOSE OTHER THAN FOR WHICH IT IS FURNISHED.

SUBMITTALS:

DESCRIPTION	DATE	BY	REV
ISSUED FOR REVIEW	09/20/24	IBA	A
ISSUED FOR PERMITTING	09/25/24	IBA	0
REVISED PER AHJ COMMENTS	11/15/24	IBA	1

APPLICANT SITE NAME:
WHOLE FOOD (PORTSMOUTH)

APPLICANT SITE NUMBER:
AGI-INA-NH-0001

SITE ADDRESS:
1600 WOODBURY AVE
PORTSMOUTH, NH 03801

SHEET DESCRIPTION: TITLE SHEET

SHEET #: T-1.0

Docusign Envelope ID: 1C4F2B64-D77B-41F4-BC3F-6BCF8F1E1FE7

GENERAL NOTES

1. CURRENT OWNER OF RECORD:
   DSQ HOLDING LLC
   DEED REFERENCE: BOOK 4894, PAGE 2646.
   PLAN REFERENCE: (D-32485)
   SITE ADDRESS: 1600-1618 WOODBURY AVE, PORTSMOUTH, NH (ROCKINGHAM COUNTY)
   ASSESSORS PARCEL: MAP 238 LOT 16 & MAP 239 LOT 2

2. THIS PLAN IS THE RESULT OF AN ON-THE-GROUND SURVEY PERFORMED BY ODONE SURVEY & MAPPING ON APRIL 15-17, 2014. THIS PLAN HAS BEEN PREPARED FOR TITLE PURPOSES ONLY. SURVEY BY TRIMBLE S6 TOTAL STATION.

3. ALL FIELD MEASUREMENTS MATCHED RECORDED DIMENSIONS WITHIN THE PRECISION REQUIREMENTS OF ALTA/ACSM SPECIFICATIONS UNLESS OTHERWISE SHOWN.

4. AS OF APRIL 17, 2014 NO RECENT EARTHWORK OR BUILDING CONSTRUCTION WAS OBSERVED ON THE SUBJECT PREMISES, NO RECENT CHANGES IN STREET RIGHT-OF-WAY LINES WAS OBSERVED OR PROPOSED TO BE ALTERED, NO EVIDENCE WAS OBSERVED THAT THE SUBJECT PREMISES WERE BEING USED AS A SOLID WASTE DUMP OR SANITARY LANDFILL, AND NO EVIDENCE WAS OBSERVED OF CEMETERIES LOCATED ON THE SUBJECT PREMISES.

5. UTILITY NOTE: LOCATION OF UTILITIES SHOWN HEREON WERE DETERMINED BY OBSERVATION OF ABOVE GROUND EVIDENCE.
   PUBLIC UTILITIES: GAS, ELECTRIC, SEWER, TELEPHONE AND WATER ACCESS THE PROPERTY VIA A PUBLIC RIGHT-OF-WAY OR EASEMENT LEADING TO A PUBLIC RIGHT-OF-WAY.

6. PROPERTY HAS DIRECT ACCESS TO ARTHUR BRADY DRIVE AND DURGIN LANE AS SHOWN AND INDIRECT ACCESS TO WOODBURY AVENUE THROUGH ACCESS EASEMENT AS NOTED.

7. NO EVIDENCE OF A STREET NUMBER LISTED ON THE BUILDINGS.

8. PLAN REFERENCES: (ROCKINGHAM COUNTY REGISTRY OF DEEDS) D-32485, D-21957 AND D-22028

ZONING INFORMATION

LISTED BELOW ARE SETBACK, HEIGHT, AND FLOOR SPACE AREA RESTRICTIONS AS DISCLOSED BY APPLICABLE ZONING OR BUILDING CODES (BEYOND THOSE REQUIRED UNDER PARAGRAPH 5d OF THE ALTA STANDARDS) UNLESS "NONE" IS STATED BELOW.

ZONING CLASSIFICATION: GENERAL BUSINESS (GB)
PROVIDED FROM THE CITY OF PORTSMOUTH ZONING ORDINANCE

		REQUIRED
MINIMUM LOT AREA		43,560 SQ. FT.
MINIMUM FRONTAGE		200 FT.
MAX. LOT COVERAGE		30%
MINIMUM OPEN SPACE		20%
MINIMUM SETBACKS:	FRONT	30 FT.
	SIDE	30 FT.
	REAR	50 FT.
MAXIMUM BUILDING HEIGHT		60 FT.

PARKING REQUIREMENT: (NON-RESIDENTIAL USES)

MINIMUM: 1 SPACE PER 350 SQUARE FEET OF GROSS FLOOR AREA
MAXIMUM: 1 SPACE PER 250 SQUARE FEET OF GROSS FLOOR AREA.

PARKING TABLE	NO. OF SPACES
REGULAR PARKING	538
HANDICAP PARKING	25
TOTAL PARKING SPACES	563

FLOOD NOTE: BY GRAPHIC PLOTTING ONLY, THIS PROPERTY IS **ZONE X,** OF THE FLOOD INSURANCE RATE MAP, COMMUNITY PANEL NO. **330229 0260 E,** WHICH BEARS AN EFFECTIVE DATE OF **MAY 17, 2005** AND **NO IMPROVEMENTS ARE** IN A SPECIAL FLOOD HAZARD AREA. AS SHOWN ON THE FEMA WEBSITE (HTTP://MSC.FEMA.GOV) BY FIRMETTE CREATED ON APRIL 23, 2014 WE HAVE LEARNED THIS COMMUNITY **DOES** CURRENTLY PARTICIPATE IN THE PROGRAM. NO FIELD SURVEYING WAS PERFORMED TO DETERMINE THIS ZONE AND AN ELEVATION CERTIFICATE MAY BE NEEDED TO VERIFY THIS DETERMINATION OR APPLY FOR A VARIANCE FROM THE FEDERAL EMERGENCY MANAGEMENT AGENCY.

ITEMS CORRESPONDING TO SCHEDULE B

EXCEPTIONS FROM COVERAGE, SCHEDULE B, COMMITMENT FOR TITLE INSURANCE COMMITMENT NO. 14-0093KC-FN (NH) OF FIDELITY NATIONAL TITLE INSURANCE COMPANY, BEARING AN EFFECTIVE DATE OF APRIL 2, 2014.

NOTE: EXCEPTION ITEMS NOT LISTED BELOW ARE STANDARD TITLE EXCEPTIONS AND/OR ARE NOT MATTERS OR ISSUES THAT PERTAIN TO THIS SURVEY.

7. RIGHTS AND EASEMENTS SET FORTH IN SEWER EASEMENT TO THE UNITED STATES OF AMERICA SET FORTH IN JUDGMENT (CIVIL ACTION NO. 1353) RECORDED IN BOOK 1311, PAGE 322. (PLOTTED-AFFECTS PROPERTY AS SHOWN)

8. EASEMENT FROM VASILIOS ALEXANDROPULOS AND ANGELOS KOSTROLES TO NEW HAMPSHIRE ELECTRIC COMPANY AND NEW ENGLAND TELEPHONE AND TELEGRAPH COMPANY DATED NOVEMBER 14, 1952, RECORDED IN BOOK 1267, PAGE 326.
   NOTE: THE COMPANY INSURES THAT THE ABOVE-REFERENCED EASEMENT MAY BE EXERCISED ONLY IN THE AREA OF THE EASEMENT TO THE UNITED STATES OF AMERICA REFERRED TO IN ITEM 10 BELOW. (EASEMENT IS BLANKET COVERAGE AND CANNOT BE PLOTTED)

9. EASEMENT FROM EDWARD N. EAMES TO NORTHERN NEW ENGLAND CARPENTERS' PENSION FUND DATED JULY 27, 1984, RECORDED AUGUST 28, 1984, IN BOOK 2508, PAGE 863. (PLOTTED-AFFECTS PROPERTY AS SHOWN)

10. EASEMENT TO THE UNITED STATES OF AMERICA FOR CONSTRUCTING AND MAINTAINING WIRES FOR TRANSMISSION OF POWER, RECORDED IN BOOK 1263, PAGE 201; BOOK 1337, PAGE 277; BOOK 1340, PAGE 437; BOOK 1370, PAGE 335; BOOK 1379, PAGE 216. (PLOTTED-AFFECTS PROPERTY AS SHOWN)

11. RIGHTS AND EASEMENT GRANTED BY DURGIN SQUARE LIMITED PARTNERSHIP TO LOUIS L. DOW, SR., AND BEVERLY DOW, ET AL. AS SET FORTH IN GRANT OF RIGHT OF WAY, DATED JULY 28, 1992 AND RECORDED IN BOOK 2939, PAGE 504. (PLOTTED-AFFECTS PROPERTY AS SHOWN)

12. RIGHTS AND EASEMENT GRANTED TO DURGIN SQUARE LIMITED PARTNERSHIP TO THE CITY OF PORTSMOUTH AS SET FORTH IN CONSERVATION EASEMENT DEED, DATED MARCH 1993, AND RECORDED IN BOOK 2996, PAGE 782.
    NOTE: THE ABOVE REFERENCED CONSERVATION EASEMENT DEED STIPULATED THAT THE CITY OF PORTSMOUTH BE NOTIFIED IN WRITING WITHIN THIRTY (30) DAYS OF THE TRANSFER OF TITLE TO THE PROPERTY. (PLOTTED-AFFECTS PROPERTY AS SHOWN)

13. RIGHTS AND EASEMENTS GRANTED BY DURGIN SQUARE LIMITED PARTNERSHIP TO PUBLIC SERVICE OF NEW HAMPSHIRE (PSNH) AND NEW ENGLAND TELEPHONE AND TELEGRAPH COMPANY (NET&T), DATED MARCH 2,1993 AND RECORDED IN BOOK 2977, PAGE 1753. (PLOTTED-AFFECTS PROPERTY AS SHOWN)

14. SLOPE RELEASE GRANTED BY AGDA G. CARLSON TO THE STATE OF NEW HAMPSHIRE, DATED JULY 15, 1983 AND RECORDED IN BOOK 2456, PAGE 108. (NOT PLOTTED-LOCATION OF EASEMENT IS NOT DEFINED BY DESCRIPTION)

15. RIGHTS AND EASEMENTS GRANTED BY NELSON E. RAMSDELL, JR. AND EDITH RAMSDELL TO THE CITY OF PORTSMOUTH FOR CONSTRUCTION, MAINTENANCE, REPAIR AND REPLACEMENT OF A PUBLIC SIDEWALK, ACKNOWLEDGED AUGUST 31, 1977 AND RECORDED IN BOOK 2292, PAGE 627. (PLOTTED-AFFECTS PROPERTY AS SHOWN)

16. RIGHTS AND EASEMENT FOR A SEWER GRANTED BY DURGIN SQUARE LIMITED PARTNERSHIP TO THE CITY OF PORTSMOUTH, RECORDED IN BOOK 2996, PAGE 767. (PLOTTED-AFFECTS PROPERTY AS SHOWN)

17. TERMS AND PROVISIONS OF THE DEPARTMENT OF THE ARMY PERMIT (NO. 1990-00941) ISSUED TO JDC GROUP, DATED DECEMBER 19, 1991 AND RECORDED IN BOOK 2988, PAGE 1503. (PERTAINS TO MATTERS OF LAND USE AND CANNOT BE PLOTTED)

18. TERMS AND PROVISIONS OF N.H. WETLANDS BOARD PERMIT, AND WATER SUPPLY & POLLUTION CONTROL NONSITE SPECIFIC PERMIT ISSUED BY THE STATE OF NEW HAMPSHIRE WETLANDS BOARD TO DURGIN SQUARE LIMITED PARTNERSHIP, RECORDED IN BOOK 2989, PAGE 1306. (PERTAINS TO MATTERS OF LAND USE AND CANNOT BE PLOTTED)

19. RIGHTS OF THIRD PARTIES IN AND TO THE FORMER LOCATION OF DURGIN LANE, AS SHOWN ON PLAN D-21788. (PLOTTED-AFFECTS PROPERTY AS SHOWN)
    NOTE: THE COMPANY INSURES AGAINST LOSS, DAMAGE OR CLAIM AS A RESULT OF ASSERTION OF RIGHTS OR CLAIM OF USE BY SAID THIRD PARTIES OVER THE FORMER LOCATION OF DURGIN LANE.

20. RIGHTS, RESTRICTIONS AND A 30-FOOT ACCESS EASEMENT FROM DURGIN SQUARE LIMITED PARTNERSHIP TO 1650 WOODBURY AVENUE COMPANY AS SET FORTH IN THE RIGHT-OF-WAY AND EASEMENT AGREEMENT, DATED APRIL 5, 1993 AND RECORDED IN BOOK 2975, PAGE 2651. (PLOTTED-AFFECTS PROPERTY AS SHOWN)

21. INTENTIONALLY OMITTED

22. RIGHTS OF TENANT, AS TENANT ONLY, UNDER A LEASE BETWEEN JDC PORTSMOUTH LIMITED PARTNERSHIP AS LANDLORD AND THE T JX COMPANIES, INC., SUCCESSOR IN INTEREST TO THE T JX OPERATING COMPANIES, INC., AS TENANT, DATED JUNE 28, 1991, MEMORANDUM OF WHICH IS DATED AS OF JULY 18, 1991 AND RECORDED IN BOOK 2990, PAGE 1711, WHICH LANDLORD'S INTEREST IN SAID LEASE IS ASSIGNED TO DURGIN SQUARE LIMITED PARTNERSHIP BY VIRTUE OF AN ASSIGNMENT OF LEASE DATED MAY 18, 1992 AND RECORDED IN BOOK 2990. PAGE 1718; AS FURTHER AFFECTED BY NON-DISTURBANCE AGREEMENT AT BOOK 3938, PAGE 2877 AND AMENDMENTS TO LEASE AT BOOK 3938, PAGE 2883 AND BOOK 4452, PAGE 937.
    THE ABOVE EXCEPTIONS AFFECT TRACT I OF SCHEDULE A ONLY. (NOT PLOTTED-NON-SURVEY RELATED)

    THE ABOVE EXCEPTIONS AFFECT TRACT ONE OF SCHEDULE A ONLY.

23. RIGHTS OF TENANT, AS TENANT ONLY, UNDER A LEASE BETWEEN JDC PORTSMOUTH LIMITED PARTNERSHIP AS LANDLORD AND SHAW'S SUPERMARKETS, INC., AS TENANT, DATED JULY 30, 1991, NOTICE OF WHICH IS DATED AUGUST 5, 1991 AND RECORDED IN BOOK 2890, PAGE 1795, WHICH LANDLORD'S INTEREST IN SAID LEASE IS ASSIGNED TO DURGIN SQUARE LIMITED PARTNERSHIP BY VIRTUE OF AN ASSIGNMENT OF LEASE DATED MAY 18, 1992; AS AFFECTED BY AMENDMENT OF LEASE RECORDED IN BOOK 4452, PAGE 930. (NOT PLOTTED-NON-SURVEY RELATED)

VICINITY MAP - NOT TO SCALE

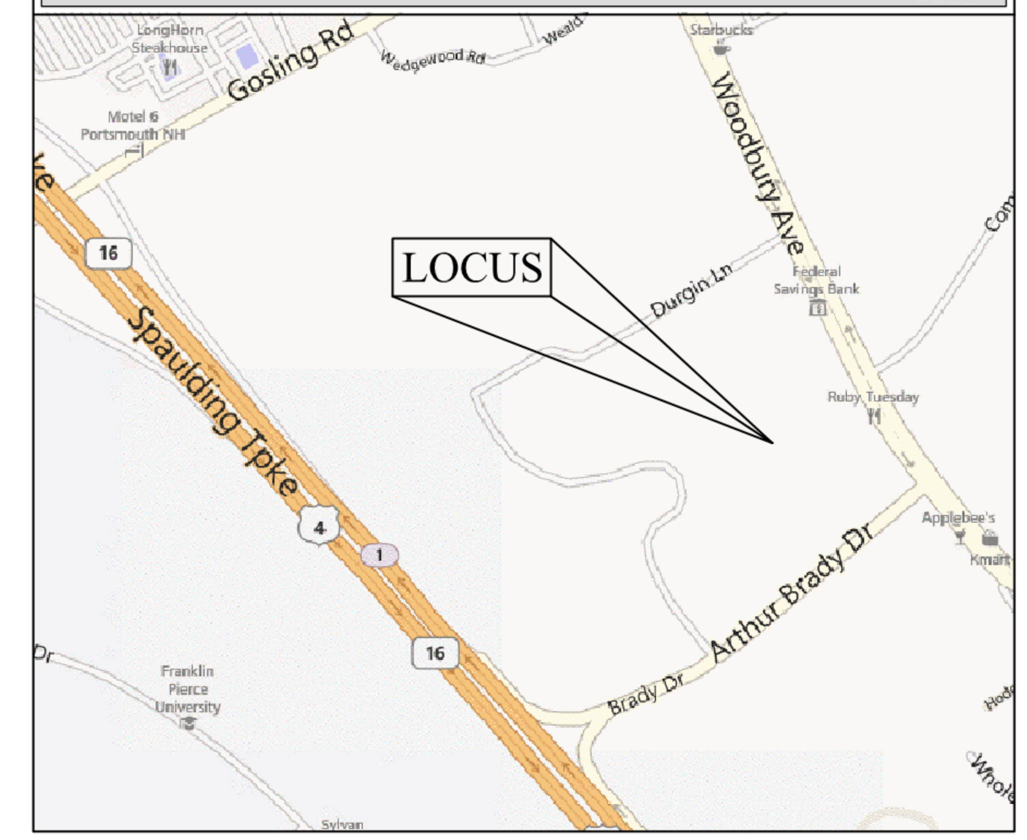

EXCEPTIONS FROM COVERAGE (CONTINUED)

24. RIGHTS OF TENANT, AS TENANT AND HOLDER OF A NON-EXCLUSIVE EASEMENT TO USE THE COMMON AREAS FOR THE TERM OF LEASE ONLY, UNDER A LEASE BETWEEN JDC PORTSMOUTH LIMITED PARTNERSHIP AS LESSOR AND OFFICEMAX, INC. AS LESSEE, DATED APRIL 13, 1992, MEMORANDUM OF WHICH IS DATED AS OF APRIL 13, 1992 AND RECORDED IN BOOK 2990, PAGE 1720, WHICH LESSOR'S INTEREST IN SAID LEASE IS ASSIGNED TO DURGIN SQUARE LIMITED PARTNERSHIP BY VIRTUE OF AN ASSIGNMENT OF LEASE DATED JUNE 25, 1992 AND RECORDED IN BOOK 2990, PAGE 1725, AS AFFECTED BY AMENDMENT TO LEASE RECORDED IN BOOK 4452, PAGE 945. (NOT PLOTTED-NON-SURVEY RELATED)

25. RIGHTS OF TENANT, AS TENANT ONLY, UNDER A CERTAIN LEASE, WITH DURGIN SQUARE LIMITED PARTNERSHIP AS LANDLORD, AS REFERENCED IN MEMORANDUM OF LEASE FROM DURGIN SQUARE LIMITED PARTNERSHIP TO BOSTON MARKET CORPORATION, RECORDED IN BOOK 3592, PAGE 2455, AS AFFECTED BY AGREEMENT REGARDING RESTRICTIONS RECORDED IN BOOK 4849, PAGE 1343. (NOT PLOTTED-NON-SURVEY RELATED)

26. TERMS AND PROVISIONS OF APPURTENANT EASEMENTS AT BOOK 4452, PAGE 900, BOOK 4452, PAGE 914 AND BOOK 4453, PAGE 1631 GRANTING ACCESS RIGHTS OVER ABUTTING LOT 17 TO THE LAND. THESE RIGHTS WERE NOT SEARCHED. PLEASE INFORM THE TITLE COMPANY IF YOU WOULD LIKE THESE RIGHTS TO BE SEARCHED SO THEY CAN BE INSURED. (PLOTTED-AFFECTS PROPERTY AS SHOWN)

27. TERMS AND PROVISIONS OF THE DEED AT BOOK 4452, PAGE 881 WHICH CONVEYS A PORTION OF LOT 17 TO THE ABUTTER AS SHOWN ON PLAN D32485. (PLOTTED-AFFECTS PROPERTY AS SHOWN)

28. TERMS AND PROVISIONS OF APPURTENANT EASEMENTS AT BOOK 2935, PAGE 603 AND BOOK 2977, PAGE 2428. (PLOTTED-AFFECTS PROPERTY AS SHOWN)

29. ALL NOTATIONS, FACTS, EASEMENTS AND ISSUES AS SHOWN ON PLAN #D32485. (PLOTTED-AFFECTS PROPERTY AS SHOWN)

30. LEASEHOLD RIGHTS OF VITAMIN SHOPEE INDUSTRIES, INC. IN BOOK 5091, PAGE 2199; HOMEGOODS, INC. AT BOOK 5111, PAGE 880; ZRC OPERATIONS COMPANY, INC AT BOOK 5509, PAGE 327; (NOT PLOTTED-NON-SURVEY RELATED)

31. GRANT OF RIGHT OF WAY AT BOOK 2965, PAGE 548. (PLOTTED-BENEFITS PROPERTY AS SHOWN)

32. GRANT OF RIGHT OF WAY AT BOOK 2966, PAGE 754. (PLOTTED-BENEFITS PROPERTY AS SHOWN)

33. UTILITY EASEMENT AT BOOK 4453, PAGE 1621. (BLANKET COVERAGE-DRAIN/SEWER CONNECTIONS, LOCATION IS NOT DEFINED BY DESCRIPTION)

34. INTENTIONALLY OMITTED.

****SEE SHEET 4 FOR EXCEPTIONS 35-38

COPYRIGHT 2014 by Bock & Clark, Corp. This product style and format is protected by Copyright and all rights are reserved. The use of this style and format is strictly prohibited without the written consent and permission of Bock & Clark, Corp.

RECORD DESCRIPTION

EXHIBIT A - LEGAL DESCRIPTION

TRACT ONE (1600 WOODBURY)
A CERTAIN PARCEL OF LAND, WITH THE BUILDINGS AND IMPROVEMENTS THEREON, IF ANY, SITUATE AND LYING AND BEING IN THE CITY OF PORTSMOUTH, COUNTY OF ROCKINGHAM AND STATE OF NEW HAMPSHIRE, SHOWN ON PLAN D-32485 AS MAP R-38, LOT 16, SAID TO CONTAIN 694,376 SQUARE FEET, ACCORDING TO SAID PLAN.

TOGETHER WITH THE BENEFIT OF UTILITY EASEMENT OVER MAP R-38, LOT 17, AS RESERVED IN DEED TO RICHARD P. FUSEGNI, DATED FEBRUARY 28, 2005, RECORDED IN BOOK 4452, PAGE 881, SUBJECT TO THE TERMS THEREOF.

***SEE SHEET 4 FOR TRACT TWO, THREE AND FOUR.

SURVEY DESCRIPTION (TRACT ONE):

A CERTAIN TRACT OR PARCEL OF LAND, WITH THE BUILDINGS AND IMPROVEMENTS THEREON, IF ANY, SITUATE, LYING AND BEING IN THE CITY OF PORTSMOUTH, COUNTY OF ROCKINGHAM, AND STATE OF NEW HAMPSHIRE, BOUNDED AND DESCRIBED AS FOLLOWS:

BEGINNING AT A POINT IN THE SOUTHERLY SIDELINE OF THE RELOCATED DURGIN LANE AT THE NORTHEASTERLY CORNER OF THE DESCRIBED PREMISES; THENCE S 14°16' 10" E, 178.67 FEET TO A POINT, SAID POINT BEING IN THE NORTHERLY SIDELINE OF LAND NOW OR FORMERLY OF 1618 WOODBURY AVE LLC; THENCE TURNING AND RUNNING S 73°34'44" W, 25.54 FEET TO A POINT THENCE TURNING AND RUNNING S 18°16'58" E, 79.06 FEET TO A POINT; THENCE TURNING AND RUNNING N 73°57'36" E, 145.00 FEET TO A POINT; THENCE RUNNING N 62°45'33" E, 40.48 FEET TO A POINT IN THE WESTERLY SIDELINE OF WOODBURY AVENUE; THENCE TURNING AND RUNNING IN SAID WESTERLY SIDELINE OF WOODBURY AVENUE, S 09°54'47" E, 151.50 FEET, TO AN IRON ROD AT THE NORTHEASTERLY CORNER OF LAND NOW OR FORMERLY OF RICHARD P. FUSEGNI; THENCE TURNING AND RUNNING ALONG LAND OF SAID FUSEGNI, S 79°55'30" W, 198.01 FEET TO A POINT; THENCE TURNING AND RUNNING ALONG LAND OF SAID FUSEGNI, S 13°44'05" E, 235.81 FEET TO A RAILROAD SPIKE; THENCE TURNING AND RUNNING, STILL ALONG LAND OF SAID FUSEGNI, N 76°13'21" E, 182.80 FEET TO A RAILROAD SPIKE IN THE WESTERLY SIDELINE OF WOODBURY AVENUE; THENCE TURNING AND RUNNING ALONG SAID WESTERLY SIDELINE OF WOODBURY AVENUE; ALONG A CURVE TO THE LEFT WHICH AS A RADIUS OF 1,952.86 FEET, AN ARC DISTANCE OF 152.30 FEET, STILL IN SAID WESTERLY SIDELINE OF WOODBURY AVENUE TO A POINT, SAID POINT BEING THE NORTHEASTERLY CORNER OF LAND NOW OR FORMERLY OF EAMES AND SIMPSON REAL ESTATE; THENCE TURNING AND RUNNING ALONG LAND OF SAID EAMES, S 71 °25'50" W, 167.99 FEET TO A POINT; THENCE TURNING AND RUNNING, STILL ALONG LAND OF SAID EAMES, S 13°59'50" E, 62.28 FEET TO A POINT; THENCE TURNING AND RUNNING, STILL ALONG LAND OF SAID EAMES, S 31 °48' 13" E, 51.41 FEET TO A POINT; THENCE TURNING AND RUNNING, STILL ALONG LAND OF SAID EAMES, S 12°55'05" E, 172.98 FEET TO A POINT IN THE NORTHERLY SIDELINE OF ARTHUR BRADY DRIVE; THENCE TURNING AND RUNNING IN SAID SIDELINE OF ARTHUR BRADY DRIVE, S 65°55'37" W, 269.91 FEET TO A POINT; THENCE RUNNING, STILL ALONG SAID ARTHUR BRADY DRIVE, S 65°52' 19" W, 381.02 FEET TO A POINT, SAID POINT BEING IN THE EASTERLY SIDELINE OF LAND NOW OR FORMERLY OF OCW RETAIL; THENCE TURNING AND RUNNING ALONG LAND OF SAID OCW RETAIL, N 22°36'41" W, 244.81 FEET TO A POINT; THENCE TURNING AND RUNNING, N 70°42' 09" E, 253.61 FEET TO A POINT; THENCE RUNNING, N 71 °29' 10" E, 26.54 FEET TO A DRILL HOLE IN THE CORNER OF A STONE WALL; THENCE TURNING AND RUNNING ALONG SAID STONE WALL, N 30°15'29" W, 435.26 FEET TO AN ANGLE POINT IN SAID STONE WALL; THENCE CONTINUING ALONG SAID STONE WALL, N 41 °57'49" W, 82.02 FEET TO A CORNER IN SAID STONE WALL; THENCE, N 36°05'40" W, 36.87 FEET TO A POINT; THENCE, N 31°48'24" W, 20.91 FEET TO A POINT; THENCE ALONG A STONE WALL, N 40°16'24" W, 284.68 FEET TO A POINT; THENCE RUNNING ALONG SAID STONE WALL, N 38°59'24" W, 155.91 FEET TO A POINT; THENCE, N 39°00'03" W, 44.08 FEET TO A POINT; THENCE, N 35°30'52" W, 36.82 FEET TO A POINT, WHICH POINT IS THE NORTHWESTERLY CORNER OF THE DESCRIBED PREMISES AND IN THE SOUTHERLY SIDELINE OF RELOCATED DURGIN LANE; THENCE TURNING AND RUNNING IN THE SOUTHERLY SIDELINE OF RELOCATED DURGIN LANE, ALONG A CURVE TO THE RIGHT, WHICH HAS A RADIUS OF 18.00 FEET, AN ARC DISTANCE OF 11.91 FEET TO A POINT; THENCE S 51 °01' 12" E, 42.04 FEET, STILL IN THE SOUTHERLY SIDELINE OF DURGIN LANE, TO A POINT; THENCE ALONG A CURVE TO THE LEFT, WHICH HAS A RADIUS OF 159.54 FEET, AN ARC DISTANCE OF 148.27 FEET, STILL IN THE SOUTHERLY SIDELINE OF RELOCATED DURGIN LANE, TO A POINT; THENCE CONTINUING IN THE SAID SOUTHERLY SIDELINE OF THE RELOCATED DURGIN LANE, N 75°43'50" E, 659.49 FEET TO THE POINT OF BEGINNING.

CONTAINING 694,376 SQUARE FEET OR 15.941 ACRES OF LAND/

THE PROPERTY DESCRIBED ABOVE IS THE SAME PROPERTY AS DESCRIBED IN FIDELITY NATIONAL TITLE INSURANCE COMPANY COMMITMENT FOR TITLE INSURANCE NO. 14-0093KC-FN (NH), BEARING AN EFFECTIVE DATE OF APRIL 2, 2014.

ALTA/ACSM LAND TITLE SURVEY

DPF DURGIN SQUARE

B&C PROJECT NO. 201400921- 001

1600-1618 WOODBURY AVENUE, PORTSMOUTH, NH

BASED UPON TITLE COMMITMENT NO. 14-0093KC-FN (NH)
OF FIDELITY NATIONAL TITLE INSURANCE COMPANY
BEARING AN EFFECTIVE DATE OF APRIL 2, 2014

SURVEYOR'S CERTIFICATION

TO: DPF ACQUISITIONS LLC, A DELAWARE LIMITED LIABILITY COMPANY AND ANY AFFILIATE OR ASSIGNEE; FIDELITY NATIONAL TITLE INSURANCE COMPANY AND BOCK & CLARK CORPORATION.

THIS IS TO CERTIFY THAT THIS MAP OR PLAT AND THE SURVEY ON WHICH IT IS BASED WERE MADE IN ACCORDANCE WITH THE 2011 MINIMUM STANDARD DETAIL REQUIREMENTS FOR ALTA/ACSM LAND TITLE SURVEYS, JOINTLY ESTABLISHED AND ADOPTED BY ALTA AND NSPS, AND INCLUDES ITEMS 1, 2, 3, 4, 6B, 7A, 7B1, 7C, 8, 9, 11A, 13, 14, 16, 17, 18 AND 21 OF TABLE A THEREOF. THE FIELD WORK WAS COMPLETED ON APRIL 17, 2014.

I CERTIFY THAT THE BOUNDARY LINES AND ALL LOT LINES WITHIN AND BORDERING THE SUBJECT PARCEL, SHOWN HEREON ARE A RESULT OF AN ACTUAL FIELD SURVEY MADE ON THE GROUND, CONDUCTED ON APRIL 15-17, 2014 USING A TRIMBLE S6 TOTAL STATION, AND THE UNADJUSTED LINEAR ERROR OF CLOSURE EXCEEDS BOTH THE MINIMUM OF THE 1:10,000 AS DEFINED IN SECTION 503.04 OF THE NEW HAMPSHIRE CODE OF ADMINISTRATIVE RULES AND THE MINIMUM OF 1:15,000 AS DEFINED IN SECTION 4.2 OF THE NEW HAMPSHIRE LAND SURVEYORS ASSOCIATION ETHICS AND STANDARDS:

THIS SURVEY CONFORMS TO CATEGORY 1 CONDITION 1 AS DEFINED IN SECTION 4.3.1.1 OF THE NEW HAMPSHIRE LAND SURVEYORS ASSOCIATION ETHICS AND STANDARDS.

I CERTIFY THAT THIS PLAT IS NOT A SUBDIVISION PURSUANT TO THIS TITLE AND THAT THE LINES OF STREETS AND WAYS SHOWN ARE THOSE OF PUBLIC OR PRIVATE STREETS OR WAYS ALREADY ESTABLISHED AND THAT NO NEW WAYS ARE SHOWN. (RSA 676:18 PAR. III)

GLENN D. ODONE JR., LLS
STATE OF NEW HAMPSHIRE NO. 976

DATE OF SURVEY: APRIL 24, 2014
DATE OF LAST REVISION: MAY 15, 2014
NETWORK PROJECT NO. 201400921-001

STATE OF NEW HAMPSHIRE LICENSED LAND SURVEYOR No. 976 GLENN D. ODONE JR.
SIGNATURE

SURVEY PREPARED BY:

ODONE SURVEY & MAPPING
SURVEYING • MAPPING • PLANNING
291 Main Street, Suite 5
Northborough, MA 01532
Tel.: 508-351-6022
Fax: 508-351-6633

Bock & Clark's National Surveyors Network
National Coordinators of ALTA/ACSM Land Title Surveys
537 North Cleveland-Massillon Road, Akron, Ohio 44333
Phone: (800) SURVEYS (787-8397), Fax: (330) 666-3608 www.bockandclark.com

BOCK & CLARK Commercial Real Estate Due Diligence EST 1973

Docusign Envelope ID: 1C4F2B64-D77B-41F4-BC3F-6BCF8F1E1FE7

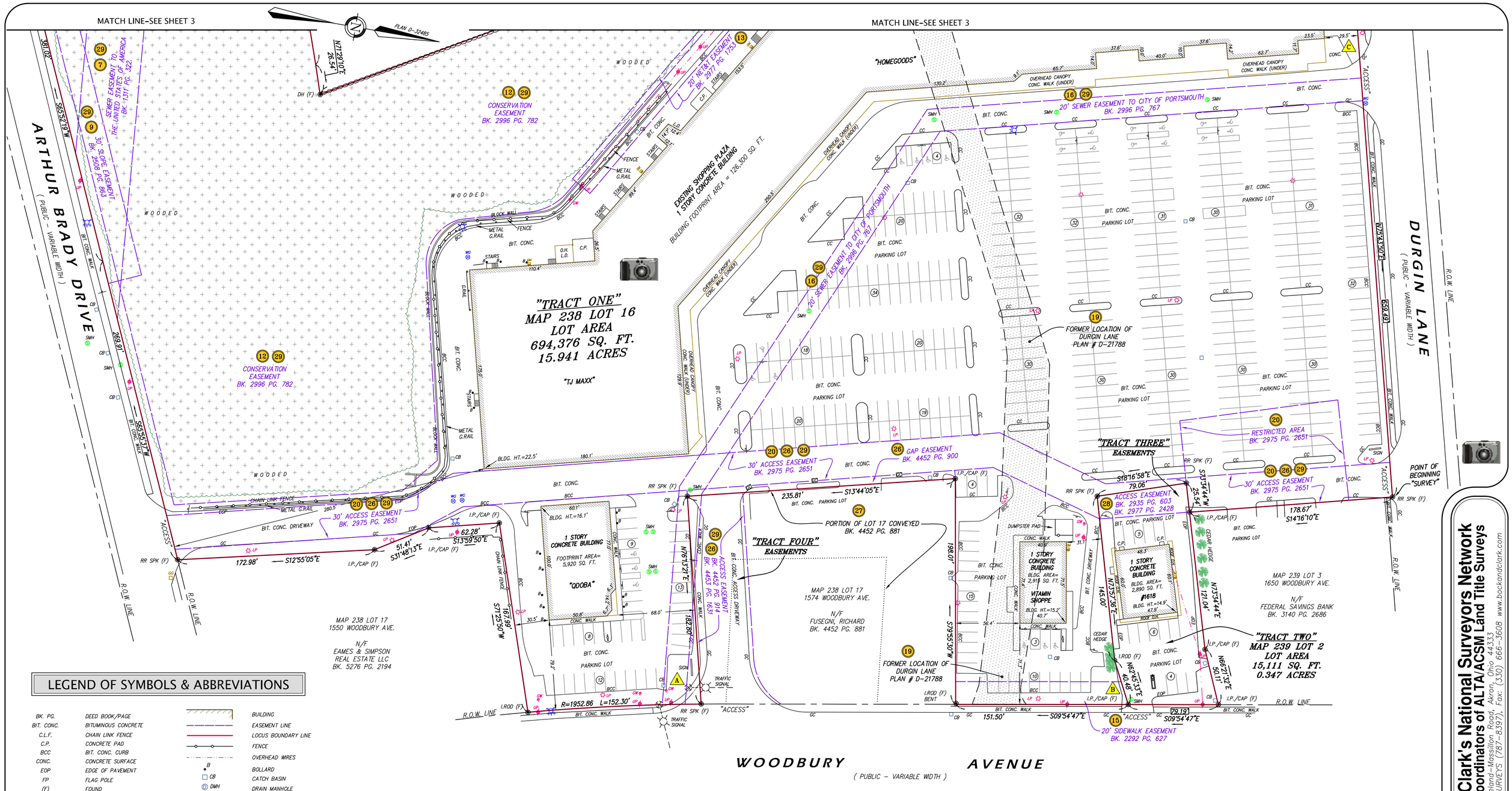

LEGEND OF SYMBOLS & ABBREVIATIONS

BK. PG.	DEED BOOK/PAGE
BIT. CONC.	BITUMINOUS CONCRETE
C.L.F.	CHAIN LINK FENCE
C.P.	CONCRETE PAD
BCC	BIT. CONC. CURB
CONC.	CONCRETE SURFACE
EOP	EDGE OF PAVEMENT
FP	FLAG POLE
(F)	FOUND
GC	GRANITE CURB
N/F	NOW OR FORMERLY
CC	CONCRETE CURB
O.H.	OVERHANG
P.O.B.	POINT OF BEGINNING
R.O.W.	RIGHT-OF-WAY
(S)	SET
♿	HANDICAP PARKING
(22)	NUMBER OF PARKING SPACES
DH	DRILLHOLE
I.P.	IRON PIN/IRON PIPE
SB/DH	STONE BOUND/ DRILLHOLE
A	ENCROACHMENT SYMBOL
8	SCHEDULE B EXCEPTION ITEM
	BUILDING
	EASEMENT LINE
	LOCUS BOUNDARY LINE
	FENCE
	OVERHEAD WIRES
B	BOLLARD
CB	CATCH BASIN
DMH	DRAIN MANHOLE
	LIGHT POLE
	FIRE HYDRANT
GW	GUY WIRE
EMH	ELECTRIC MANHOLE
TMH	TELEPHONE MANHOLE
SMH	SEWER MANHOLE
	SIGN
	UTILITY POLE
WG	WATER GATE VALVE
	POST INDICATOR VALVE
MW	MONITORING WELL
UM	UNIDENTIFIED MANHOLE
GG	GAS GATE VALVE
E.T.	ELECTRIC TRANSFORMER

SIGNIFICANT OBSERVATIONS

A — TRAFFIC SIGNAL POST LOCATED ON INSURED PREMISE AS SHOWN BY APPROXIMATELY 10.3 FEET.

B — BITUMINOUS CONCRETE PARKING LOT EXTENDS ON TO INSURED PREMISES AS SHOWN BY APPROXIMATELY 4.2 FEET.

ALTA/ACSM LAND TITLE SURVEY

DPF DURGIN SQUARE

DURGIN LANE AND WOODBURY AVENUE, PORTSMOUTH, NH

DATE: MAY 15, 2014

SHEET 2 OF 4

Bock & Clark's National Surveyors Network
National Coordinators of ALTA/ACSM Land Title Surveys
537 North Cleveland-Massillon Road, Akron, Ohio 44333
Phone: (800) SURVEYS (787-8397), Fax: (330) 666-3608 www.bockandclark.com

BOCK & CLARK — Licensed Real Estate — Due Diligence — EST 1973

Docusign Envelope ID: 1C4F2B64-D77B-41F4-BC3F-6BCF8F1E1FE7

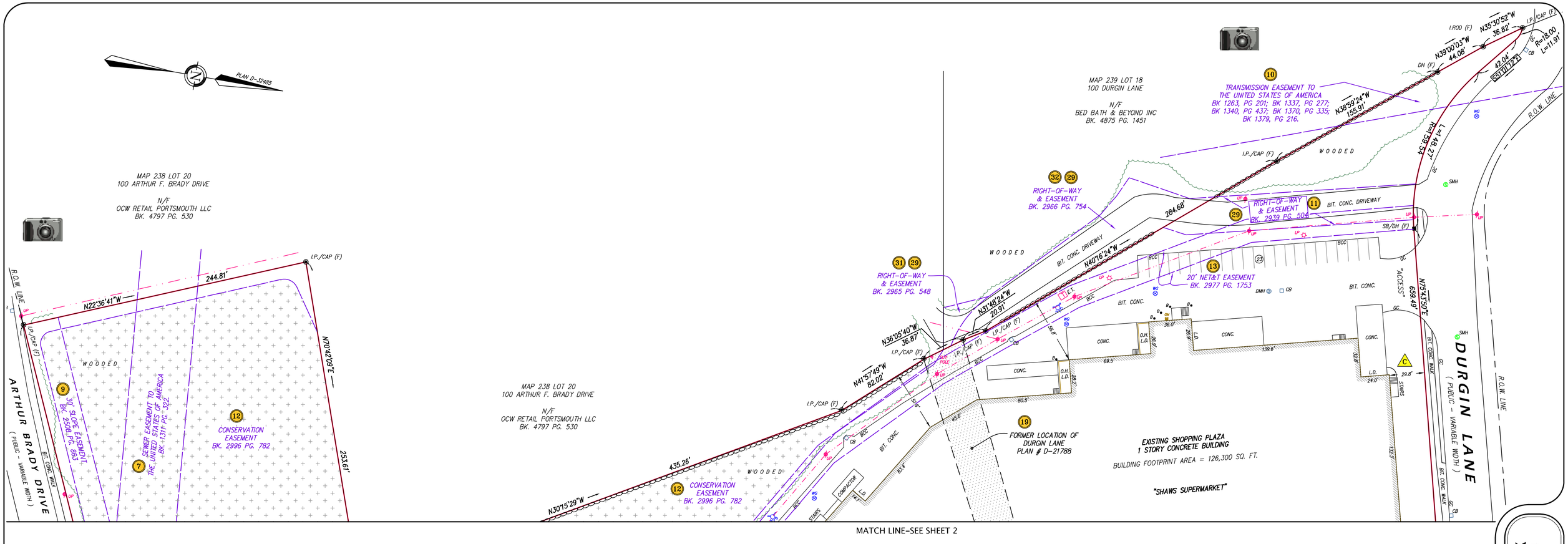

SIGNIFICANT OBSERVATIONS

C APPARENT VIOLATION OF THE 30' BUILDING SETBACK REQUIREMENT.

40 0 20 40 80 120

SCALE: 1 INCH = 40 FEET

ALTA/ACSM LAND TITLE SURVEY

DPF DURGIN SQUARE

DURGIN LANE AND WOODBURY AVENUE, PORTSMOUTH, NH

DATE: MAY 15, 2014 SHEET 3 OF 4

Bock & Clark's National Surveyors Network
National Coordinators of ALTA/ACSM Land Title Surveys
537 North Cleveland-Massillon Road, Akron, Ohio 44333
Phone: (800) SURVEYS (787-8397), Fax: (330) 666-3608 www.bockandclark.com

BOCK & CLARK Quality Land Title Surveys Our Difference EST 1973

Docusign Envelope ID: 1C4F2B64-D77B-41F4-BC3F-6BCF8F1E1FE7

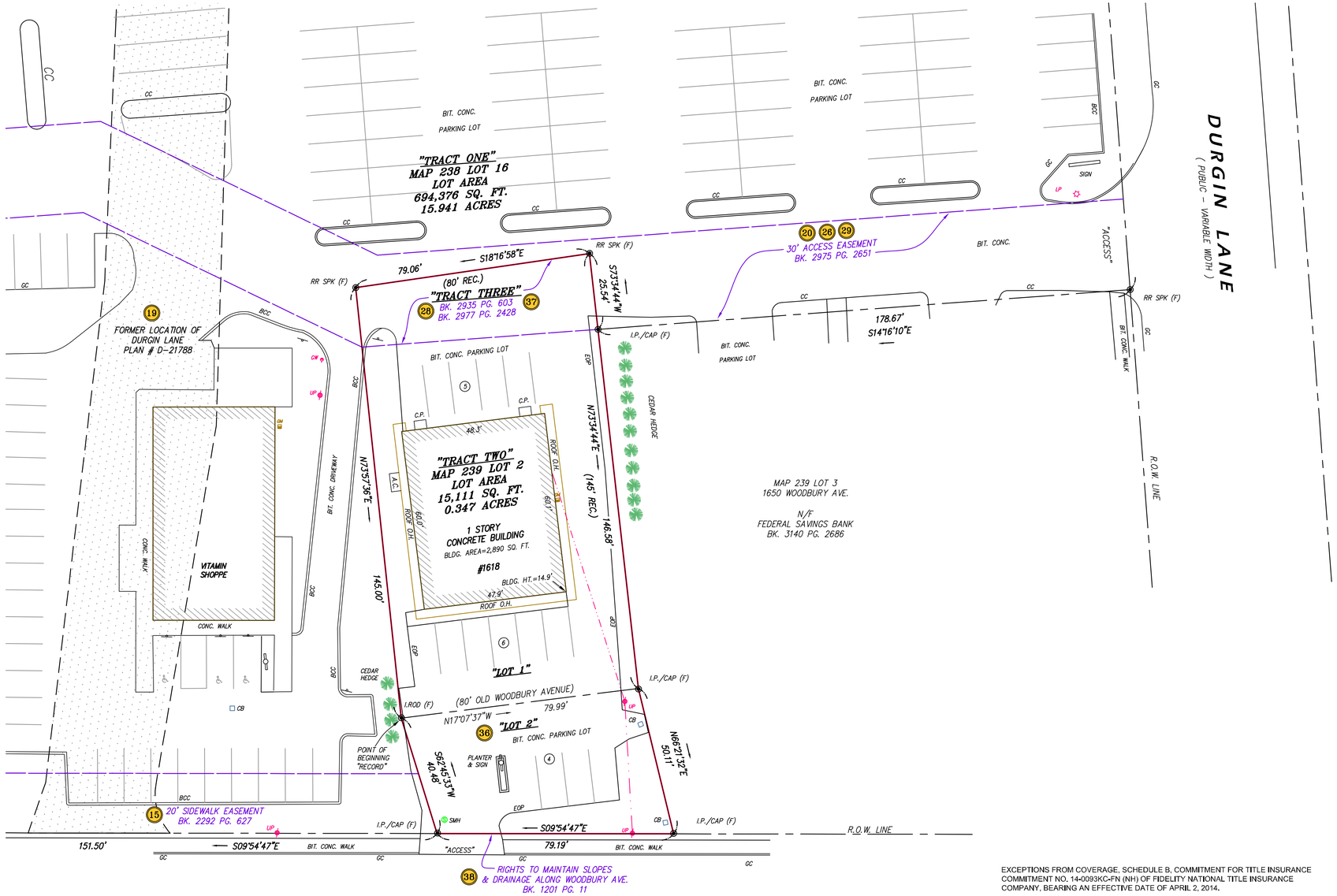

EXHIBIT A - LEGAL DESCRIPTION

TRACT TWO (1618 WOODBURY)
TWO LOTS OF LAND WITH THE BUILDINGS THEREON LOCATED ON WOODBURY AVENUE, PORTSMOUTH, COUNTY OF ROCKINGHAM AND STATE OF NEW HAMPSHIRE, MORE PARTICULARLY DESCRIBED AS FOLLOWS:

LOT 1

A CERTAIN LOT OR PARCEL OF LAND WITH THE BUILDINGS THEREON, SITUATE ON THE WESTERLY SIDE OF WOODBURY AVENUE, IN PORTSMOUTH, COUNTY OF ROCKINGHAM AND STATE OF NEW HAMPSHIRE, BOUNDED AND DESCRIBED AS FOLLOWS:
EASTERLY BY WOODBURY AVENUE EIGHTY (80) FEET; NORTHERLY BY LAND NOW OR FORMERLY OF FRED J. ROWE, ONE HUNDRED FORTY-FIVE (145) FEET; WESTERLY BY LAND NOW OR FORMERLY OF KATHERINE T. HANSUCKER EIGHTY (80) FEET; SOUTHERLY BY LAND NOW OR FORMERLY OF KATHERINE T. HANSUCKER, ONE HUNDRED FORTY-FIVE (145) FEET.

LOT 2

A CERTAIN ADJACENT TRACT OR PARCEL OF LAND LYING EASTERLY OF THE ABOVE PREMISES AS FOLLOWS:
BEGINNING AT A CONCRETE FILLED IRON PIPE AT THE SOUTHWESTERLY CORNER OF THE DESCRIBED PARCEL AT THE SOUTHEASTERLY CORNER OF LAND NOW OR FORMERLY OF K & M REALTY AND NORTHEASTERLY CORNER OF LAND NOW OR FORMERLY OF AGDA C. CARLSON. SAID IRON PIPE ALSO BEING LOCATED ON THE FORMER WESTERLY SIDELINE OF OLD WOODBURY AVENUE, THENCE RUNNING ALONG LAND OF SAID K & M REALTY N 17°07'37" W, A DISTANCE OF 79.99 FEET TO AN IRON PIPE AT THE SOUTHEASTERLY CORNER OF LAND NOW OR FORMERLY OF 1650 WOODBURY AVENUE COMPANY AT THE SOUTHWESTERLY CORNER OF OTHER LAND OF THE SAID CITY OF PORTSMOUTH. SAID IRON PIPE ALSO BEING LOCATED ON THE SAID FORMER SIDELINE OF OLD WOODBURY AVENUE, THENCE TURNING AND RUNNING ALONG OTHER LAND OF SAID CITY OF PORTSMOUTH N 66°21'32" E, A DISTANCE OF 50.11 FEET TO A POINT ON THE WESTERLY SIDELINE OF WOODBURY AVENUE, THENCE TURNING AND RUNNING ALONG SAID SIDELINE OF WOODBURY AVENUE S 09°54'47" E, A DISTANCE OF 79.19 FEET TO A POINT AT THE NORTHEASTERLY CORNER OF OTHER LAND OF SAID CITY OF PORTSMOUTH, THENCE TURNING AND RUNNING ALONG OTHER LAND OF SAID CITY OF PORTSMOUTH S 62°45'33" W, A DISTANCE OF 40.48 FEET TO SAID POINT OF BEGINNING. SAID TRACT OR PARCEL OF LAND CONTAINING 3,521 SQUARE FEET, MORE OR LESS.

SAID PARCEL OF LAND BEING SHOWN ON PLAN ENTITLED "DISCONTINUANCE PLAN OF THE PUBLIC RIGHT-OF-WAY OF OLD WOODBURY AVENUE," DATED APRIL 8, 1991, BY RICHARD P. MILLET AND ASSOCIATES, AND RECORDED IN THE ROCKINGHAM COUNTY REGISTRY OF DEEDS AS PLAN NO. D-21772.

TRACT THREE (EASEMENTS)
TRACTS ONE AND TWO ARE INSURED TOGETHER WITH BENEFIT OF THE APPURTENANT EASEMENTS SET FORTH AT BOOK 2935, PAGE 603 AND BOOK 2977, PAGE 2428, SUBJECT TO THE TERMS THEREOF.

TRACT FOUR (EASEMENTS)
TRACT ONE IS INSURED TOGETHER WITH BENEFIT OF THE APPURTENANT EASEMENTS SET FORTH AT BOOK 4452, PAGE 900, BOOK 4452, PAGE 914 AND BOOK 4453, PAGE 1631 GRANTING ACCESS RIGHTS OVER ABUTTING LOT 17 TO THE LAND, SUBJECT TO THE TERMS THEREOF.

EXCEPTIONS FROM COVERAGE, SCHEDULE B, COMMITMENT FOR TITLE INSURANCE COMMITMENT NO. 14-0093KC-FN (NH) OF FIDELITY NATIONAL TITLE INSURANCE COMPANY, BEARING AN EFFECTIVE DATE OF APRIL 2, 2014.

THE FOLLOWING EXCEPTIONS ITEM 35 THROUGH 38 AFFECT TRACT TWO

35. RIGHTS RESERVED TO THE CITY OF PORTSMOUTH AS DESCRIBED IN DEED AT VOLUME 4950, PAGE 2893 OF THE ROCKINGHAM COUNTY REGISTRY OF DEEDS. (BLANKET COVERAGE AND CANNOT BE PLOTTED)

36. INTENTIONALLY OMITTED

37. EASEMENT AGREEMENT AT VOLUME 2935, PAGE 603; AS AMENDED AT VOLUME 2977, PAGE 2428 OF THE ROCKINGHAM COUNTY REGISTRY OF DEEDS. (PLOTTED-AFFECTS PROPERTY AS SHOWN)

38. EASEMENTS TO THE STATE OF NEW HAMPSHIRE AS CONVEYED IN DEED AT VOLUME 1201, PAGE 11 OF THE ROCKINGHAM COUNTY REGISTRY OF DEEDS. (PLOTTED-DESCRIBED AS RIGHTS TO MAINTAIN SLOPES AND DRAINAGE ALONG WOODBURY AVENUE, HOWEVER THERE IS NO DEFINED WIDTH OF EASEMENT)

LEGEND OF SYMBOLS & ABBREVIATIONS

BK. PG.	DEED BOOK/PAGE		BUILDING
BIT. CONC.	BITUMINOUS CONCRETE		EASEMENT LINE
C.L.F.	CHAIN LINK FENCE		LOCUS BOUNDARY LINE
C.P.	CONCRETE PAD		FENCE
BCC	BIT. CONC. CURB		OVERHEAD WIRES
CONC.	CONCRETE SURFACE	B	BOLLARD
EOP	EDGE OF PAVEMENT	CB	CATCH BASIN
FP	FLAG POLE	DMH	DRAIN MANHOLE
(F)	FOUND		LIGHT POLE
GC	GRANITE CURB		FIRE HYDRANT
N/F	NOW OR FORMERLY	GW	GUY WIRE
CC	CONCRETE CURB	EMH	ELECTRIC MANHOLE
O.H.	OVERHANG	TMH	TELEPHONE MANHOLE
P.O.B.	POINT OF BEGINNING	SMH	SEWER MANHOLE
R.O.W.	RIGHT-OF-WAY		SIGN
(S)	SET		UTILITY POLE
	HANDICAP PARKING	WG	WATER GATE VALVE
22	NUMBER OF PARKING SPACES		POST INDICATOR VALVE
DH	DRILLHOLE	MW	MONITORING WELL
I.P.	IRON PIN/IRON PIPE	MH	UNIDENTIFIED MANHOLE
SB/DH	STONE BOUND/ DRILLHOLE	GG	GAS GATE VALVE
A	ENCROACHMENT SYMBOL	C.T.	ELECTRIC TRANSFORMER
B	SCHEDULE B EXCEPTION ITEM		

20 0 10 20 40 60

SCALE: 1 INCH =20 FEET

Bock & Clark's National Surveyors Network
National Coordinators of ALTA/ACSM Land Title Surveys
537 North Cleveland-Massillon Road, Akron, Ohio 44333
Phone: (800) SURVEYS (787-8397), Fax: (330) 666-3608 www.bockandclark.com

BOCK & CLARK
Organized Real Estate
Done Diligence
EST 1973

ALTA/ACSM LAND TITLE SURVEY

DPF DURGIN SQUARE

1618 WOODBURY AVENUE, PORTSMOUTH, NH

DATE: MAY 15, 2014

SHEET 4 of 4

Docusign Envelope ID: 1C4F2B64-D77B-41F4-BC3F-6BCF8F1E1FE7

GENERAL NOTES:

1. THIS SITE PLAN SHALL BE RECORDED IN THE ROCKINGHAM COUNTY REGISTRY DEEDS.
2. ALL IMPROVEMENTS SHOWN ON THIS SITE PLAN SHALL BE CONSTRUCTED AND MAINTAINED IN ACCORDANCE WITH THE PLAN BY THE PROPERTY OWNER AN ALL FUTURE PROPERTY OWNERS. NO CHANGES SHALL BE MADE TO THIS SITE PLAN WITHOUT THE EXPRESS APPROVAL OF THE PORTSMOUTH PLANNING DIRECTOR.
3. ALL CONDITIONS ON THIS PLAN SHALL REMAIN IN EFFECT IN PERPETUITY PURSUANT TO THE REQUIREMENTS OF THE SITE PLAN REVIEW REGULATIONS.
4. PROPOSED DEVELOPMENT IS NOT LOCATED IN WELLHEAD PROTECTION OR AQUIFER PROTECTION AREA.

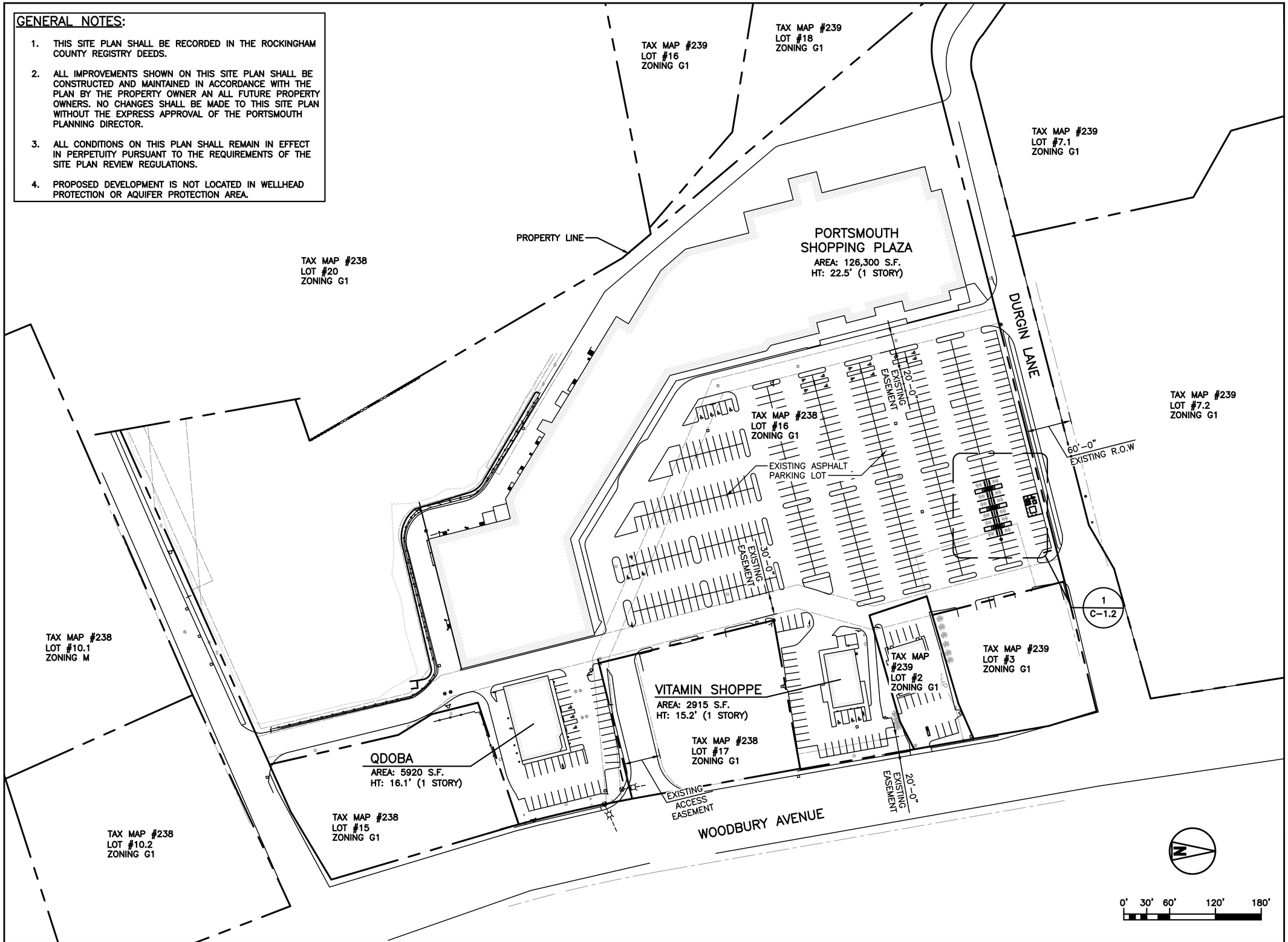

OVERALL SITE & ZONING PLAN | 1

STAMP:

STATE OF NEW HAMPSHIRE
SHELTON DOUGLAS KEISLING
No. 18260
LICENSED
PROFESSIONAL ENGINEER
11/18/2024
EF94D8A5B80B407...

ENGINEERING LICENSE:
STATE OF NEW HAMPSHIRE
PE CERTIFICATE OF AUTHORIZATION # 01191

ENGINEER:		PE#:	DISCIPLINE:	
SDK	SHELTON D. KEISLING	18260	ELECTRICAL	E
TMS	TERRANCE M. SUPER	10926	ELECTRICAL	E

iONNA™

PLANS PREPARED FOR:
AGI

PLANS PREPARED BY:
SSC

DRAWING NOTICE:
THIS DRAWING HAS NOT BEEN PUBLISHED AND IS THE SOLE PROPERTY OF SSC, INC. AND IS LENT TO THE BORROWER FOR THEIR CONFIDENTIAL USE ONLY, AND IN CONSIDERATION OF THE LOAN OF THIS DRAWING, THE BORROWER PROMISES AND AGREES TO RETURN IT UPON REQUEST AND AGREES THAT IT WILL NOT BE REPRODUCED, COPIED, LENT OR OTHERWISE DISPOSED OF DIRECTLY OR INDIRECTLY, NOR USED FOR ANY PURPOSE OTHER THAN FOR WHICH IT IS FURNISHED.

SUBMITTALS:

DESCRIPTION	DATE	BY	REV
ISSUED FOR REVIEW	09/20/24	IBA	A
ISSUED FOR PERMITTING	09/25/24	IBA	0
REVISED PER AHJ COMMENTS	11/15/24	IBA	1

APPLICANT SITE NAME:
WHOLE FOOD (PORTSMOUTH)

APPLICANT SITE NUMBER:
AGI-INA-NH-0001

SITE ADDRESS:
1600 WOODBURY AVE
PORTSMOUTH, NH 03801

SHEET DESCRIPTION:
OVERALL SITE & ZONING PLAN

SHEET #:
C-1.0

Docusign Envelope ID: 1C4F2B64-D77B-41F4-BC3F-6BCF8F1E1FE7

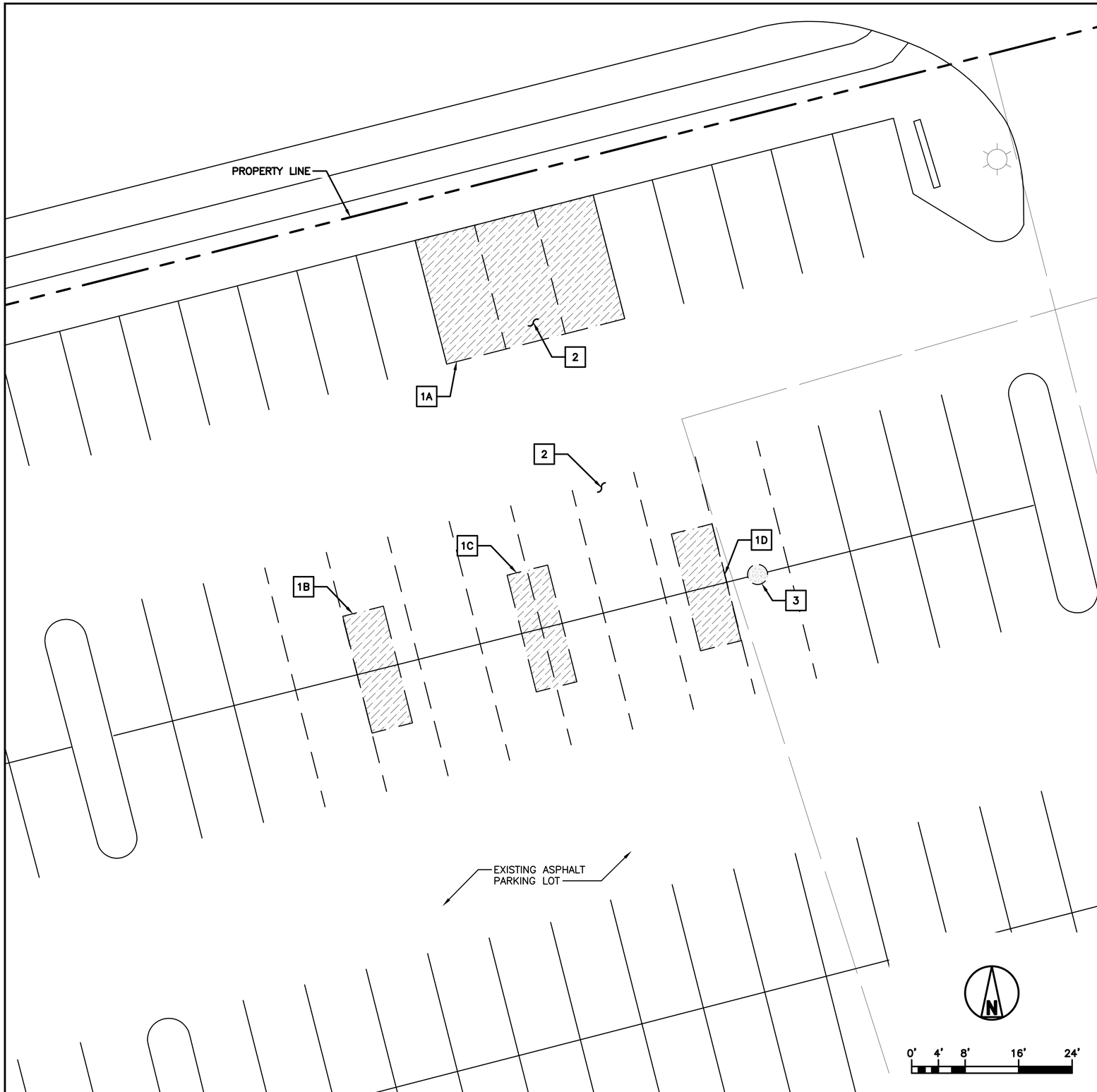

EXISTING SITE PLAN | 1

TOTAL AREA LEGEND:

DISTURBED IMPERVIOUS AREA
870± SQ. FT

KEYED NOTES:

1A APPROX. 525 SQ. FT. DISTURBED IMPERVIOUS AREA FOR PROPOSED AGI EQUIPMENT & CONDUIT ROUTING

1B APPROX. 115 SQ. FT. DISTURBED IMPERVIOUS AREA FOR PROPOSED AGI EQUIPMENT & CONDUIT ROUTING

1C APPROX. 115 SQ. FT. DISTURBED IMPERVIOUS AREA FOR PROPOSED AGI EQUIPMENT & CONDUIT ROUTING

1D APPROX. 115 SQ. FT. DISTURBED IMPERVIOUS AREA FOR PROPOSED AGI EQUIPMENT & CONDUIT ROUTING

2 EXISTING PARKING STALL TO BE RESTRIPED (TYP OF 18)

3 EXISTING LIGHT POLE TO BE RELOCATED

STAMP:

11/18/2024

STATE OF NEW HAMPSHIRE
SHELTON DOUGLAS KEISLING
No. 18260
LICENSED
PROFESSIONAL ENGINEER

EF94D8A5B80B407...

ENGINEERING LICENSE:

STATE OF NEW HAMPSHIRE

PE CERTIFICATE OF AUTHORIZATION # 01191

ENGINEER:		PE#:	DISCIPLINE:	
SDK	SHELTON D. KEISLING	18260	ELECTRICAL	E
TMS	TERRANCE M. SUPER	10926	ELECTRICAL	E

PLANS PREPARED FOR:

PLANS PREPARED BY:

DRAWING NOTICE:

THIS DRAWING HAS NOT BEEN PUBLISHED AND IS THE SOLE PROPERTY OF SSC, INC. AND IS LENT TO THE BORROWER FOR THEIR CONFIDENTIAL USE ONLY, AND IN CONSIDERATION OF THE LOAN OF THIS DRAWING, THE BORROWER PROMISES AND AGREES TO RETURN IT UPON REQUEST AND AGREES THAT IT WILL NOT BE REPRODUCED, COPIED, LENT OR OTHERWISE DISPOSED OF DIRECTLY OR INDIRECTLY, NOR USED FOR ANY PURPOSE OTHER THAN FOR WHICH IT IS FURNISHED.

SUBMITTALS:

DESCRIPTION	DATE	BY	REV
ISSUED FOR REVIEW	09/20/24	IBA	A
ISSUED FOR PERMITTING	09/25/24	IBA	0
REVISED PER AHJ COMMENTS	11/15/24	IBA	1

APPLICANT SITE NAME:

WHOLE FOOD (PORTSMOUTH)

APPLICANT SITE NUMBER:

AGI-INA-NH-0001

SITE ADDRESS:

1600 WOODBURY AVE
PORTSMOUTH, NH 03801

SHEET DESCRIPTION:

EXISTING SITE PLAN

SHEET #:

C-1.1

Docusign Envelope ID: 1C4F2B64-D77B-41F4-BC3F-6BCF8F1E1FE7

KEYED NOTES:

1. PROPOSED DUAL L3 DISPENSER (TYP OF 6)
2A. PROPOSED BOLLARD (FURNISH & INSTALL) (TYP OF 20) (SEE SHEET C-3.1, DETAIL 1)
2B. PROPOSED REMOVABLE BOLLARD (FURNISH & INSTALL) (TYP OF 2)
3. PROPOSED UTILITY TRANSFORMER (BY UTILITY COMPANY)
4. PROPOSED SWITCHBOARD "MDP"
5. PROPOSED EV SIGN POST (TYP OF 2) (SEE SHEET C-3.2, DETAIL 2)
6. PROPOSED WHEELSTOP (FURNISH & INSTALL) (TYP OF 12) (SEE SHEET C-3.1, DETAIL 4)
7. PROPOSED UTILITY RACK
8. PROPOSED METER SOCKET
9. PROPOSED CT CABINET
10. PROPOSED SITE COMM BOX
11. PROPOSED MINI POWER-ZONE
12. RELOCATED LIGHT POLE
13. PROPOSED 16'-6 x 5'-0" x 11'-10" CANOPY (PER CANOPY STRUCTURAL PACKAGE) (TYP OF 3)

CANOPY DATA	
CANOPY OVERHANG AREA	82.5 S.F. (16.5' x 5')
CANOPY FLOOR TO CEILING HEIGHT	10.5'
TOTAL PROJECT STRUCTURE AREA	82.5 x 3 = 247.5 S.F.

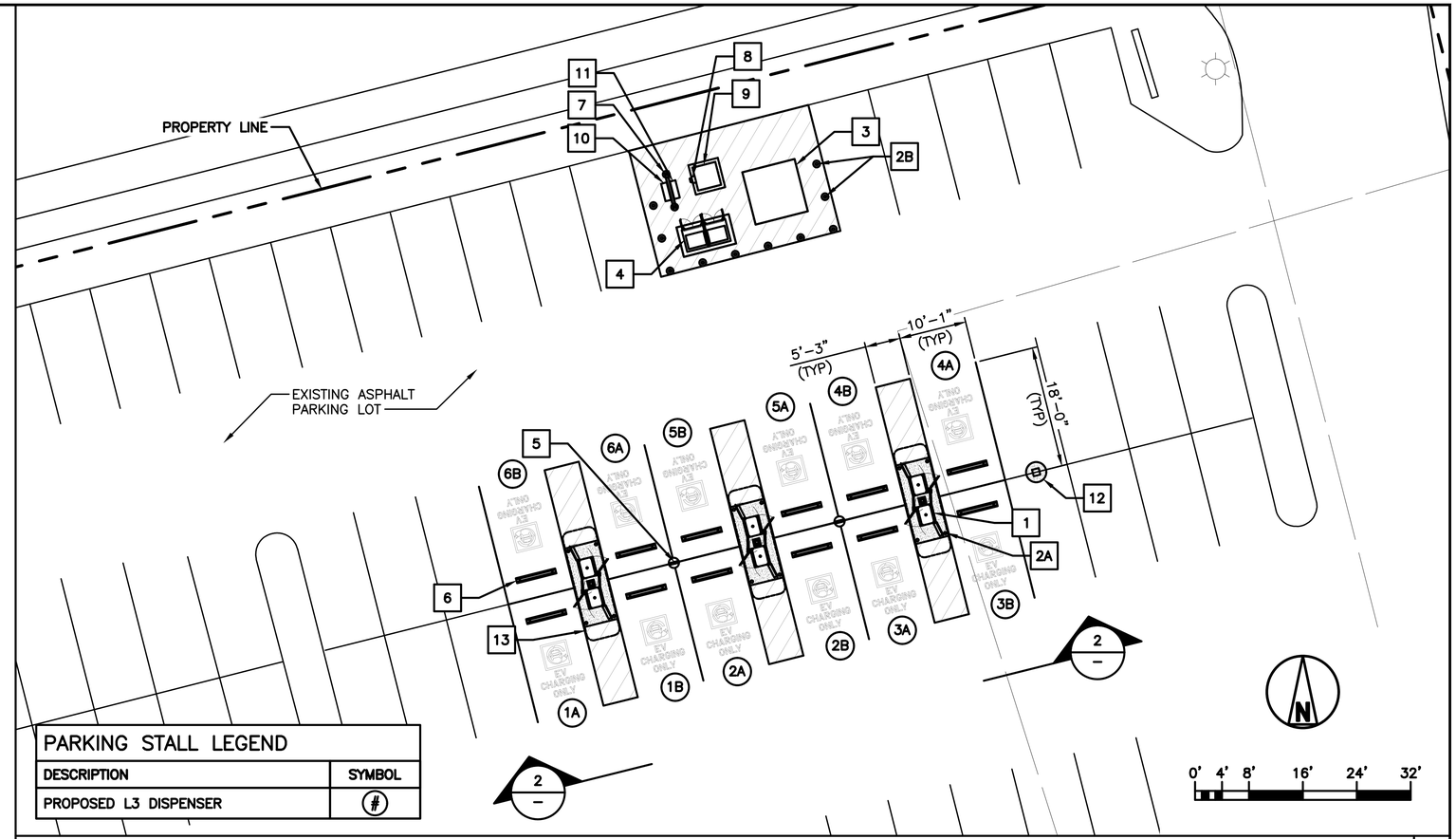

PARKING STALL LEGEND	
DESCRIPTION	SYMBOL
PROPOSED L3 DISPENSER	#

ENLARGED SITE PLAN 1

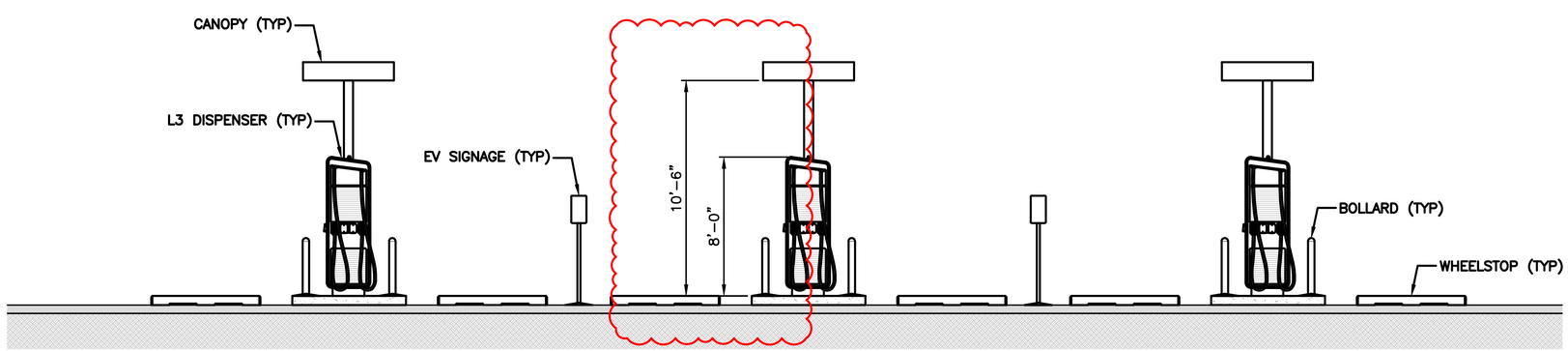

EQUIPMENT ELEVATION 2

STAMP:

STATE OF NEW HAMPSHIRE
SHELTON DOUGLAS KEISLING
No. 18260
LICENSED
PROFESSIONAL ENGINEER
11/18/2024
EF94D8A5B80B407...

ENGINEERING LICENSE:
STATE OF NEW HAMPSHIRE
PE CERTIFICATE OF AUTHORIZATION # 01191

ENGINEER:		PE#:	DISCIPLINE:	
SDK	SHELTON D. KEISLING	18260	ELECTRICAL	E
TMS	TERRANCE M. SUPER	10926	ELECTRICAL	E

iONNA™

PLANS PREPARED FOR: AGI

PLANS PREPARED BY: SSC

DRAWING NOTICE:
THIS DRAWING HAS NOT BEEN PUBLISHED AND IS THE SOLE PROPERTY OF SSC, INC. AND IS LENT TO THE BORROWER FOR THEIR CONFIDENTIAL USE ONLY, AND IN CONSIDERATION OF THE LOAN OF THIS DRAWING, THE BORROWER PROMISES AND AGREES TO RETURN IT UPON REQUEST AND AGREES THAT IT WILL NOT BE REPRODUCED, COPIED, LENT OR OTHERWISE DISPOSED OF DIRECTLY OR INDIRECTLY, NOR USED FOR ANY PURPOSE OTHER THAN FOR WHICH IT IS FURNISHED.

SUBMITTALS:

DESCRIPTION	DATE	BY	REV
ISSUED FOR REVIEW	09/20/24	IBA	A
ISSUED FOR PERMITTING	09/25/24	IBA	0
REVISED PER AHJ COMMENTS	11/15/24	IBA	1

APPLICANT SITE NAME:
WHOLE FOOD (PORTSMOUTH)

APPLICANT SITE NUMBER:
AGI-INA-NH-0001

SITE ADDRESS:
1600 WOODBURY AVE
PORTSMOUTH, NH 03801

SHEET DESCRIPTION:
ENLARGED SITE PLAN & ELEVATION

SHEET #:
C-1.2

Docusign Envelope ID: 1C4F2B64-D77B-41F4-BC3F-6BCF8F1E1FE7

OPEN SPACE ANALYSIS	
TOTAL OPEN/GREEN SPACE BEFORE CONSTRUCTION	177,580 S.F.
TOTAL OPEN/GREEN SPACE AFTER CONSTRUCTION	177,580 S.F.
CHANGE IN OPEN/GREEN SPACE	0 S.F.

LANDSCAPING NOTE:

ALL EXISTING LANDSCAPING TO BE RETAINED DURING CONSTRUCTION.

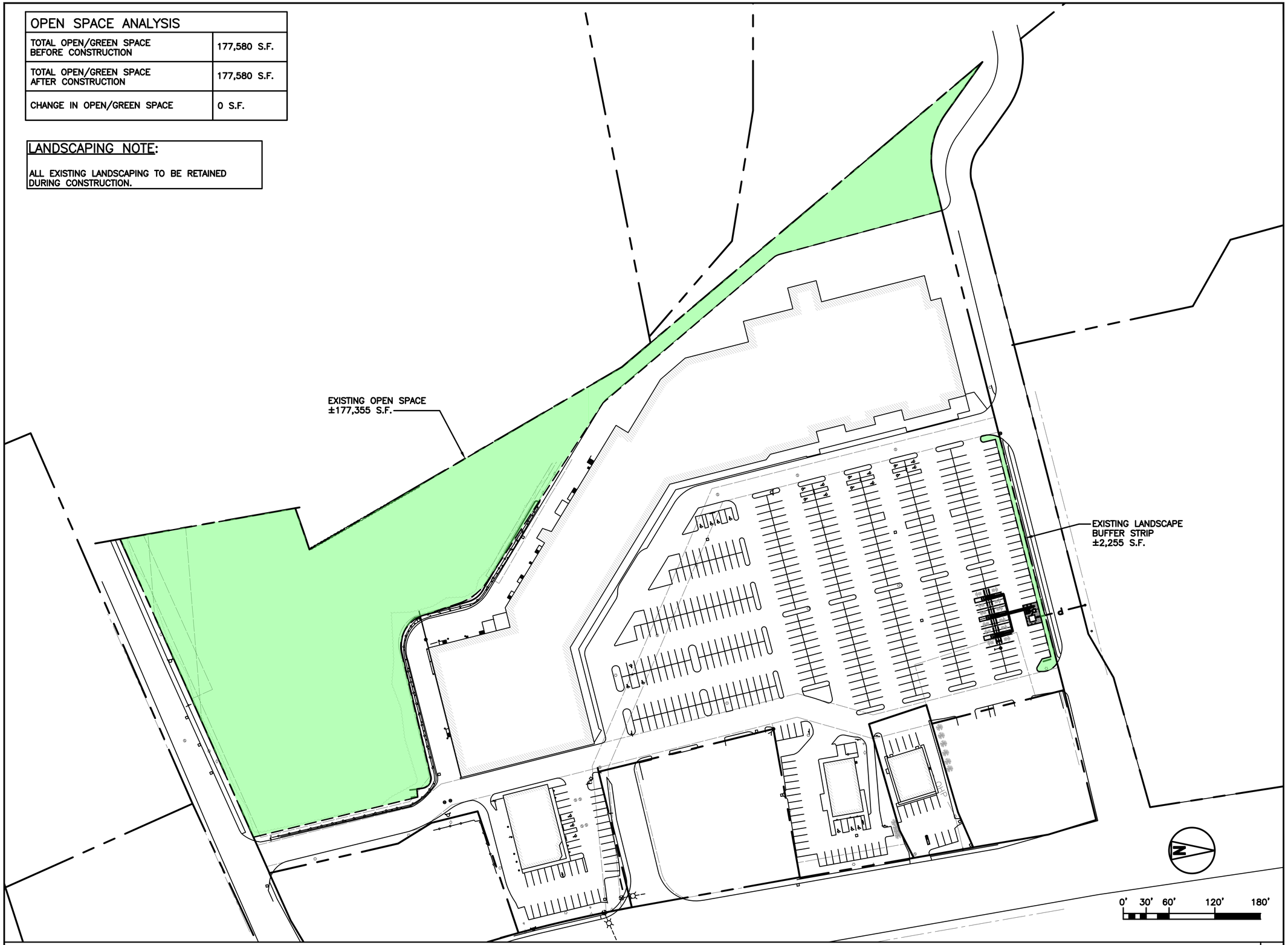

OPEN SPACE & VEGETATION PLAN

1

STAMP:

STATE OF NEW HAMPSHIRE
SHELTON DOUGLAS KEISLING
No. 18260
LICENSED
PROFESSIONAL ENGINEER

11/18/2024

EF94D8A5B80B407...

ENGINEERING LICENSE:

STATE OF NEW HAMPSHIRE

PE CERTIFICATE OF AUTHORIZATION # 01191

ENGINEER:		PE#:	DISCIPLINE:	
SDK	SHELTON D. KEISLING	18260	ELECTRICAL	E
TMS	TERRANCE M. SUPER	10926	ELECTRICAL	E

iONNA™

PLANS PREPARED FOR:

AGI

PLANS PREPARED BY:

SSC

DRAWING NOTICE:

THIS DRAWING HAS NOT BEEN PUBLISHED AND IS THE SOLE PROPERTY OF SSC, INC. AND IS LENT TO THE BORROWER FOR THEIR CONFIDENTIAL USE ONLY, AND IN CONSIDERATION OF THE LOAN OF THIS DRAWING, THE BORROWER PROMISES AND AGREES TO RETURN IT UPON REQUEST AND AGREES THAT IT WILL NOT BE REPRODUCED, COPIED, LENT OR OTHERWISE DISPOSED OF DIRECTLY OR INDIRECTLY, NOR USED FOR ANY PURPOSE OTHER THAN FOR WHICH IT IS FURNISHED.

SUBMITTALS:

DESCRIPTION	DATE	BY	REV
ISSUED FOR REVIEW	09/20/24	IBA	A
ISSUED FOR PERMITTING	09/25/24	IBA	0
REVISED PER AHJ COMMENTS	11/15/24	IBA	1

APPLICANT SITE NAME:

WHOLE FOOD (PORTSMOUTH)

APPLICANT SITE NUMBER:

AGI-INA-NH-0001

SITE ADDRESS:

1600 WOODBURY AVE
PORTSMOUTH, NH 03801

SHEET DESCRIPTION:

OPEN SPACE & VEGETATION PLAN

SHEET #:

C-1.3

Docusign Envelope ID: 1C4F2B64-D77B-41F4-BC3F-6BCF8F1E1FE7

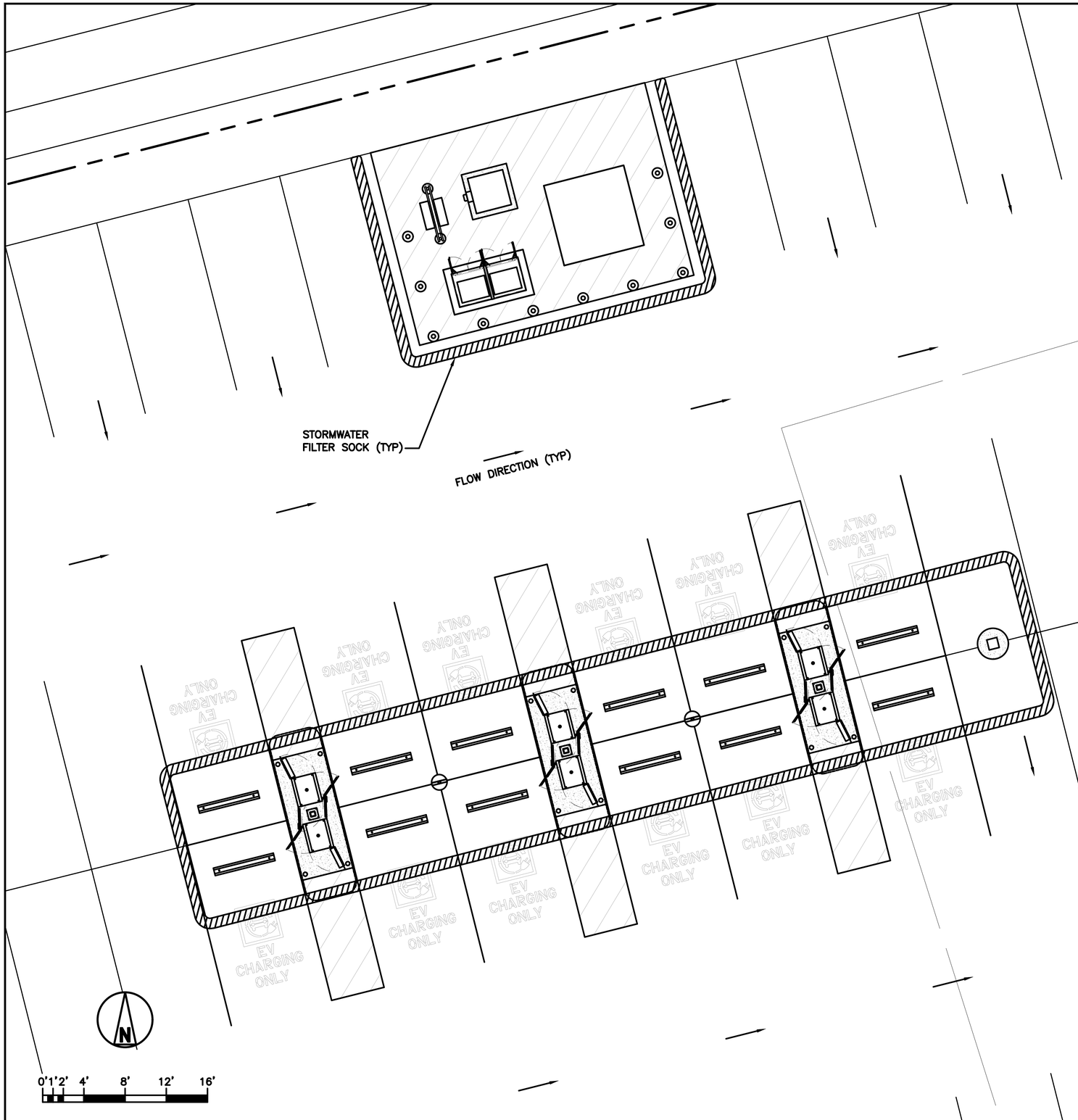

EROSION CONTROL PLAN | 1

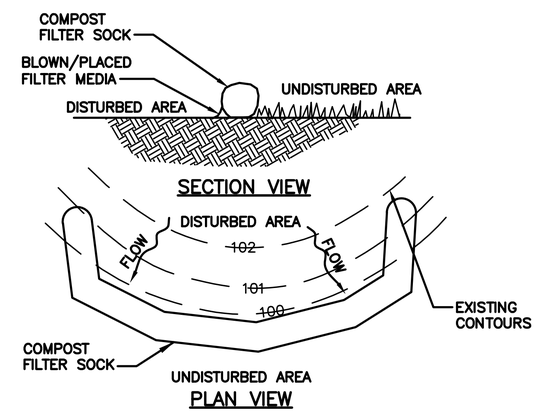

NOTES:

1. COMPOST FILTER SOCK SHALL BE PLACED AT EXISTING LEVEL GRADE. BOTH ENDS OF THE BARRIER SHALL BE EXTENDED AT LEAST 8 FEET UP SLOPE AT 45 DEGREES TO THE MAIN BARRIER ALIGNMENT. MAXIMUM SLOPE LENGTH ABOVE ANY BARRIER SHALL NOT EXCEED THAT SPECIFIED FOR THE SIZE OF THE SOCK AND THE SLOPE OF ITS TRIBUTARY AREA.
2. TRAFFIC SHALL NOT BE PERMITTED TO CROSS COMPOST FILTER SOCKS.
3. ACCUMULATED SEDIMENT SHALL BE REMOVED WHEN IT REACHES 1/2 THE ABOVE GROUND HEIGHT OF THE BARRIER AND DISPOSED IN THE MANNER DESCRIBED ELSEWHERE IN THE PLAN.
4. DAMAGED SOCKS SHALL BE REPAIRED ACCORDING TO MANUFACTURER'S SPECIFICATIONS OR REPLACED WITHIN 48 HOURS OF INSPECTION.
5. BIODEGRADABLE COMPOST FILTER SOCKS SHALL BE REPLACED AFTER 6 MONTHS; PHOTODEGRADABLE SOCKS AFTER 1 YEAR. POLYPROPYLENE SOCKS SHALL BE REPLACED ACCORDING TO MANUFACTURER'S RECOMMENDATIONS.
6. UPON STABILIZATION OF THE AREA TRIBUTARY TO THE SOCK, STAKES SHALL BE REMOVED.

STORMWATER FILTER SOCK DETAIL | 2

STAMP:

STATE OF NEW HAMPSHIRE
SHELTON DOUGLAS KEISLING
No. 18260
LICENSED
PROFESSIONAL ENGINEER
11/18/2024
EF94D8A5B80B407...

ENGINEERING LICENSE:

STATE OF NEW HAMPSHIRE

PE CERTIFICATE OF AUTHORIZATION # 01191

ENGINEER:		PE#:	DISCIPLINE:	
SDK	SHELTON D. KEISLING	18260	ELECTRICAL	E
TMS	TERRANCE M. SUPER	10926	ELECTRICAL	E

iONNA™

PLANS PREPARED FOR:

AGI

PLANS PREPARED BY:

SSC

DRAWING NOTICE:

THIS DRAWING HAS NOT BEEN PUBLISHED AND IS THE SOLE PROPERTY OF SSC, INC. AND IS LENT TO THE BORROWER FOR THEIR CONFIDENTIAL USE ONLY, AND IN CONSIDERATION OF THE LOAN OF THIS DRAWING, THE BORROWER PROMISES AND AGREES TO RETURN IT UPON REQUEST AND AGREES THAT IT WILL NOT BE REPRODUCED, COPIED, LENT OR OTHERWISE DISPOSED OF DIRECTLY OR INDIRECTLY, NOR USED FOR ANY PURPOSE OTHER THAN FOR WHICH IT IS FURNISHED.

SUBMITTALS:

DESCRIPTION	DATE	BY	REV
ISSUED FOR REVIEW	09/20/24	IBA	A
ISSUED FOR PERMITTING	09/25/24	IBA	0
REVISED PER AHJ COMMENTS	11/15/24	IBA	1

APPLICANT SITE NAME:

WHOLE FOOD (PORTSMOUTH)

APPLICANT SITE NUMBER:

AGI-INA-NH-0001

SITE ADDRESS:

1600 WOODBURY AVE
PORTSMOUTH, NH 03801

SHEET DESCRIPTION:

EROSION CONTROL PLAN

SHEET #:

C-1.4

Docusign Envelope ID: 1C4F2B64-D77B-41F4-BC3F-6BCF8F1E1FE7

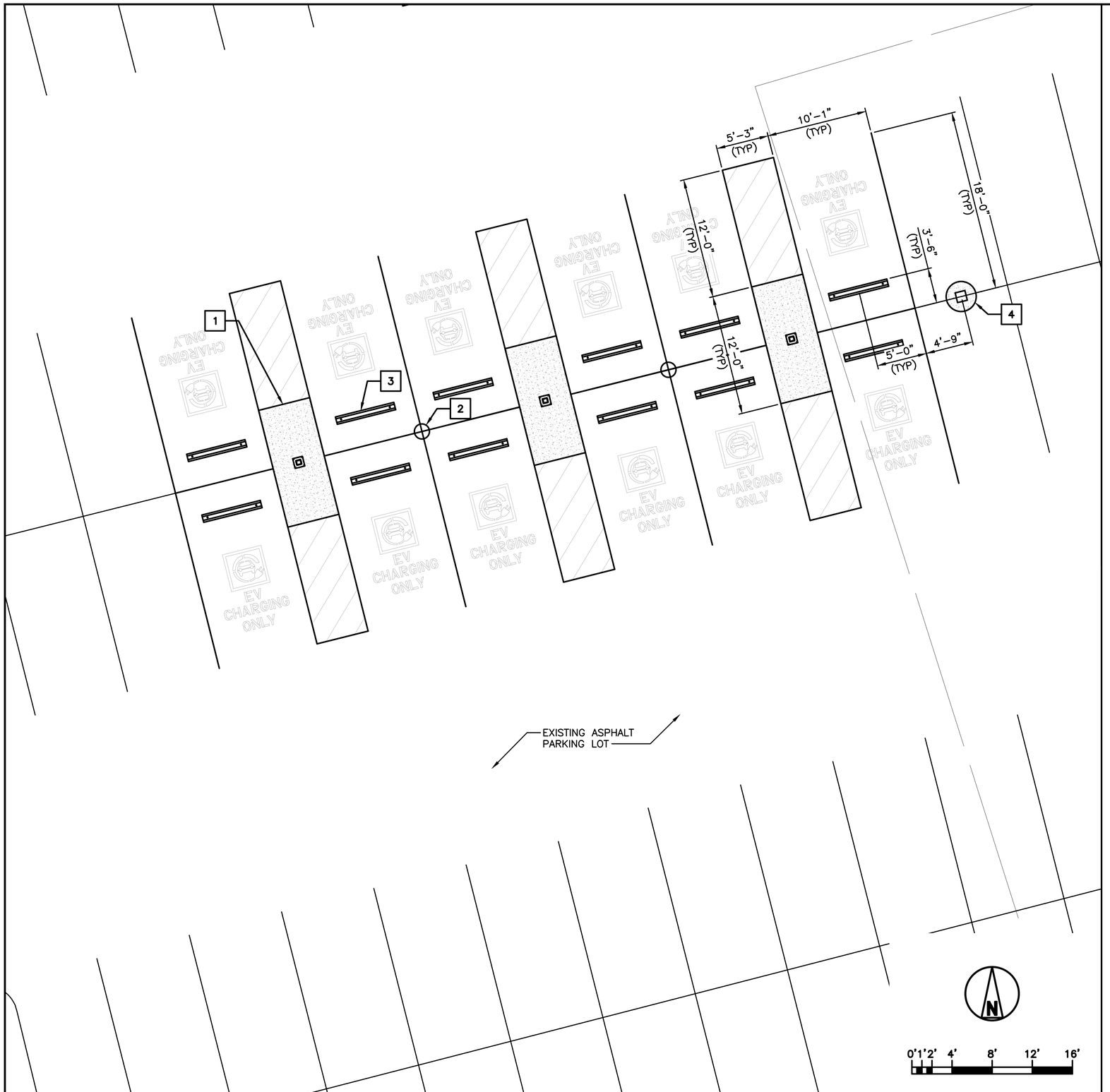

DISPENSER FOUNDATION PLAN | 1

GENERAL NOTE:

1. CONTRACTOR SHALL INSTALL BELL END FITTINGS ON ALL CONDUITS AFTER INSTALLATION

KEYED NOTES:

1. PROPOSED 5'-3" x 12'-0" PAD FOR L3 DISPENSER (TYP OF 3) (SEE SHEET C-3.0)
2. PROPOSED SIGN POST FOUNDATION (TYP OF 2) (SEE SHEET C-3.2, DETAIL 2)
3. PROPOSED WHEELSTOP (TYP OF 12) (SEE SHEET C-3.1, DETAIL 4)
4. RELOCATED LIGHT POLE

STAMP:

STATE OF NEW HAMPSHIRE
SHELTON DOUGLAS KEISLING
No. 18260
LICENSED
PROFESSIONAL ENGINEER
11/18/2024
EF94D8A5B80B407...

ENGINEERING LICENSE:

STATE OF NEW HAMPSHIRE

PE CERTIFICATE OF AUTHORIZATION # 01191

ENGINEER:		PE#:	DISCIPLINE:	
SDK	SHELTON D. KEISLING	18260	ELECTRICAL	E
TMS	TERRANCE M. SUPER	10926	ELECTRICAL	E

PLANS PREPARED FOR:

PLANS PREPARED BY:

DRAWING NOTICE:

THIS DRAWING HAS NOT BEEN PUBLISHED AND IS THE SOLE PROPERTY OF SSC, INC. AND IS LENT TO THE BORROWER FOR THEIR CONFIDENTIAL USE ONLY; AND IN CONSIDERATION OF THE LOAN OF THIS DRAWING, THE BORROWER PROMISES AND AGREES TO RETURN IT UPON REQUEST AND AGREES THAT IT WILL NOT BE REPRODUCED, COPIED, LENT OR OTHERWISE DISPOSED OF DIRECTLY OR INDIRECTLY, NOR USED FOR ANY PURPOSE OTHER THAN FOR WHICH IT IS FURNISHED.

SUBMITTALS:

DESCRIPTION	DATE	BY	REV
ISSUED FOR REVIEW	09/20/24	IBA	A
ISSUED FOR PERMITTING	09/25/24	IBA	0
REVISED PER AHJ COMMENTS	11/15/24	IBA	1

APPLICANT SITE NAME:

WHOLE FOOD (PORTSMOUTH)

APPLICANT SITE NUMBER:

AGI-INA-NH-0001

SITE ADDRESS:

1600 WOODBURY AVE
PORTSMOUTH, NH 03801

SHEET DESCRIPTION:

FOUNDATION PLANS (1 OF 2)

SHEET #:

C-2.0

Docusign Envelope ID: 1C4F2B64-D77B-41F4-BC3F-6BCF8F1E1FE7

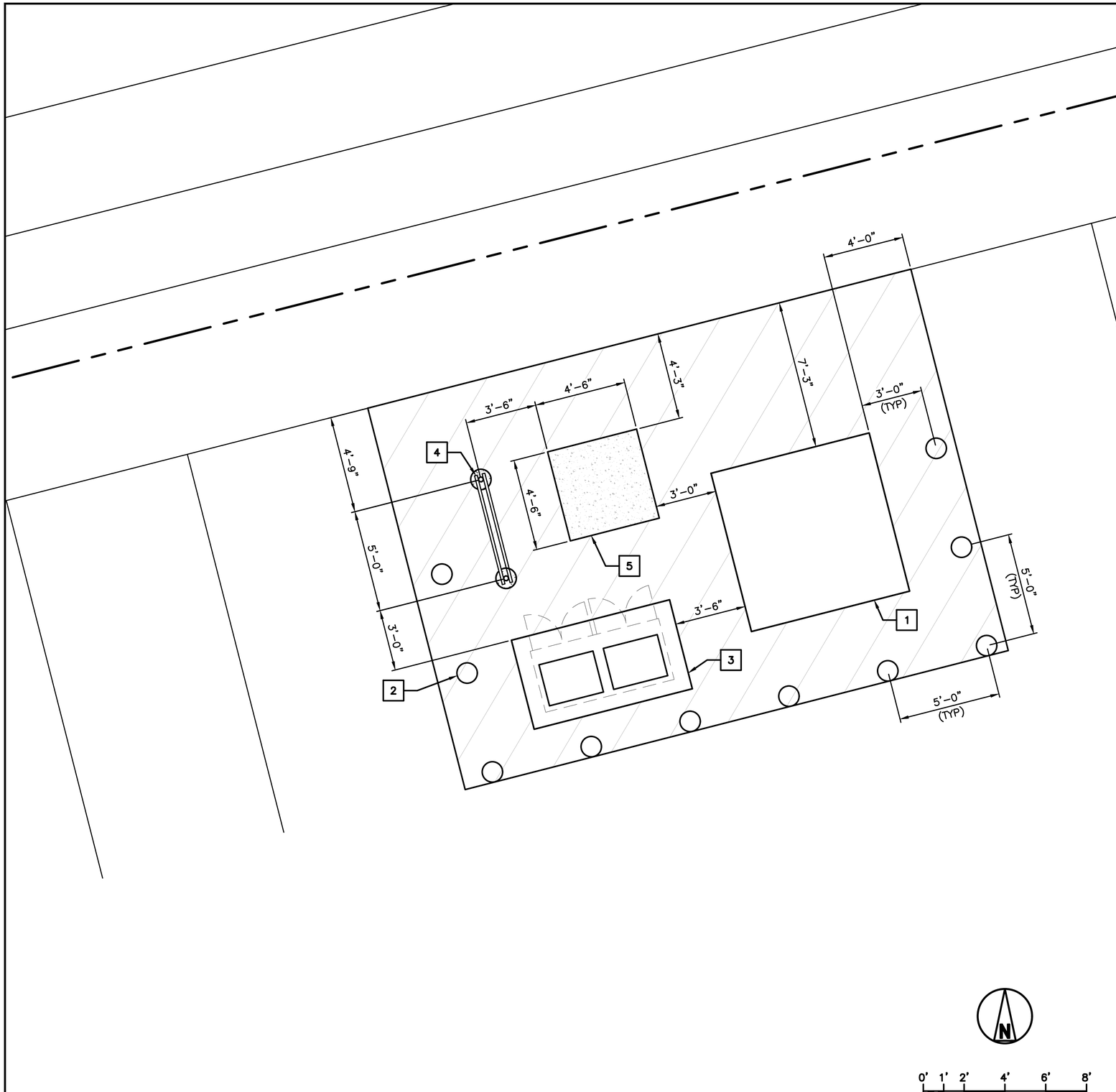

EQUIPMENT FOUNDATION PLAN | 1

KEYED NOTES:

1. UTILITY TRANSFORMER (BY UTILITY COMPANY)
2. PROPOSED BOLLARD FOUNDATION (TYP OF 10) (SEE SHEET C-3.1, DETAIL 1)
3. PROPOSED SWITCHBOARD PAD (FIELD VERIFY SIZE PER MANUFACTURER SPECIFICATIONS)
4. PROPOSED UTILITY RACK
5. PROPOSED CT CABINET FOUNDATION

STAMP:

STATE OF NEW HAMPSHIRE
SHELTON DOUGLAS KEISLING
No. 18260
LICENSED
PROFESSIONAL ENGINEER
11/18/2024
EF94D8A5B80B407...

ENGINEERING LICENSE:

STATE OF NEW HAMPSHIRE

PE CERTIFICATE OF AUTHORIZATION # 01191

ENGINEER:		PE#:	DISCIPLINE:	
SDK	SHELTON D. KEISLING	18260	ELECTRICAL	E
TMS	TERRANCE M. SUPER	10926	ELECTRICAL	E

PLANS PREPARED FOR:

PLANS PREPARED BY:

DRAWING NOTICE:

THIS DRAWING HAS NOT BEEN PUBLISHED AND IS THE SOLE PROPERTY OF SSC, INC. AND IS LENT TO THE BORROWER FOR THEIR CONFIDENTIAL USE ONLY, AND IN CONSIDERATION OF THE LOAN OF THIS DRAWING, THE BORROWER PROMISES AND AGREES TO RETURN IT UPON REQUEST AND AGREES THAT IT WILL NOT BE REPRODUCED, COPIED, LENT OR OTHERWISE DISPOSED OF DIRECTLY OR INDIRECTLY, NOR USED FOR ANY PURPOSE OTHER THAN FOR WHICH IT IS FURNISHED.

SUBMITTALS:

DESCRIPTION	DATE	BY	REV
ISSUED FOR REVIEW	09/20/24	IBA	A
ISSUED FOR PERMITTING	09/25/24	IBA	0
REVISED PER AHJ COMMENTS	11/15/24	IBA	1

APPLICANT SITE NAME:

WHOLE FOOD (PORTSMOUTH)

APPLICANT SITE NUMBER:

AGI-INA-NH-0001

SITE ADDRESS:

1600 WOODBURY AVE
PORTSMOUTH, NH 03801

SHEET DESCRIPTION:

FOUNDATION PLANS (2 OF 2)

SHEET #:

C-2.1

Docusign Envelope ID: 1C4F2B64-D77B-41F4-BC3F-6BCF8F1E1FE7

CHARGER FOUNDATION & ANCHORING PER CANOPY STRUCTURAL PACKAGE

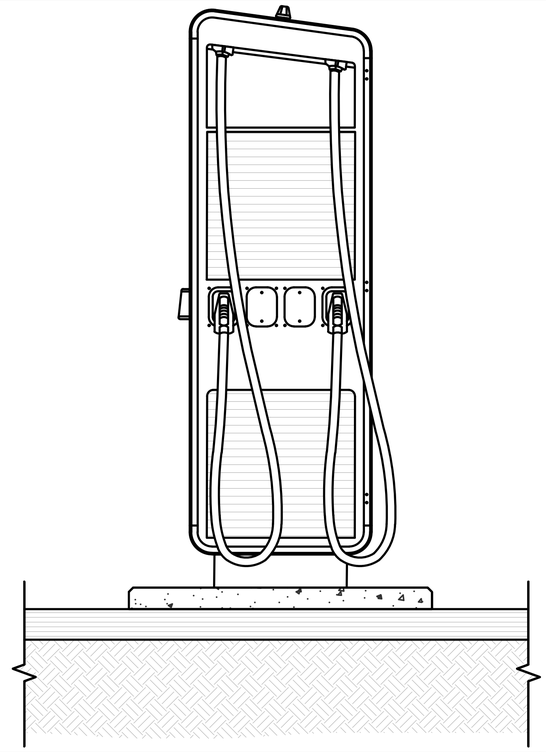

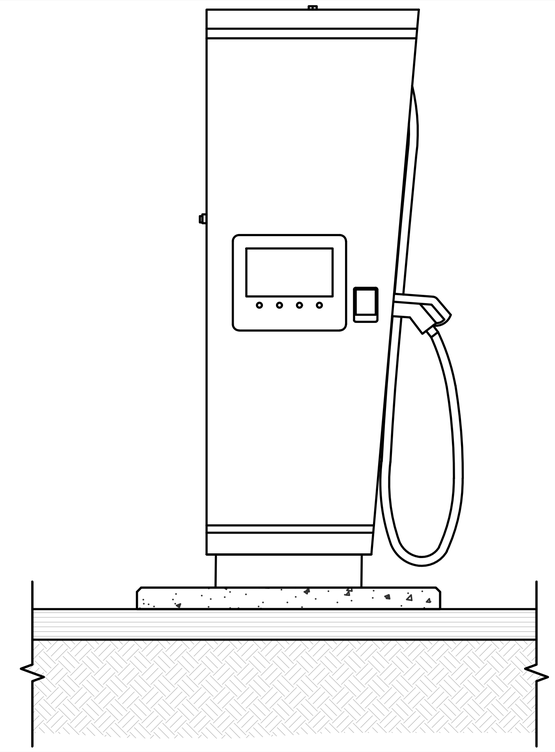

HYC 400UL DISPENSER & FOUNDATION DETAIL | 1

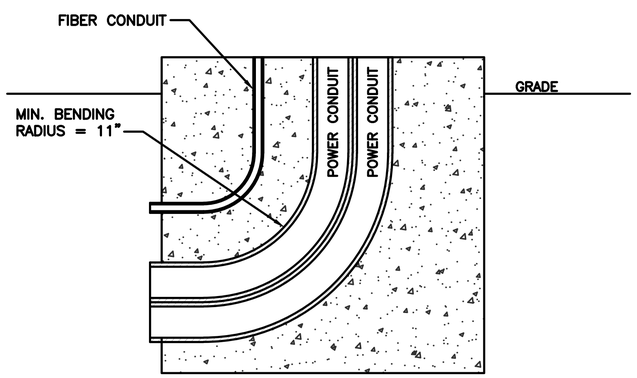

DISPENSER CONDUIT STUB UP DETAIL | 4

CHARGER FOUNDATION & ANCHORING PER CANOPY STRUCTURAL PACKAGE

HYC 400UL DC DISPENSER – ANCHORING | 3

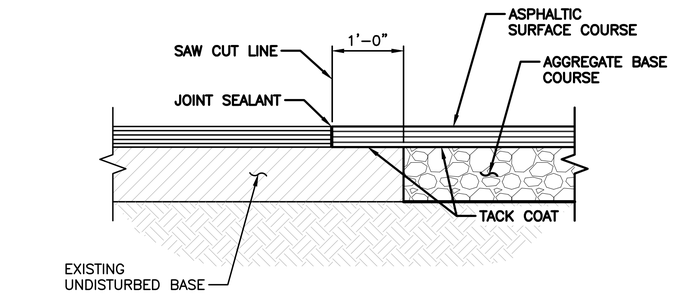

SAW CUT SECTION

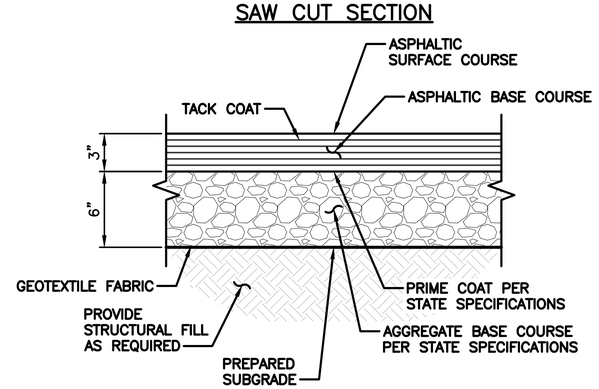

ASPHALTIC PAVING SECTION

ASPHALT REPAIR DETAIL | 2

STAMP:

STATE OF NEW HAMPSHIRE
SHELTON DOUGLAS KEISLING
No. 18260
LICENSED
PROFESSIONAL ENGINEER
11/18/2024
EF94D8A5B80B407...

ENGINEERING LICENSE:

STATE OF NEW HAMPSHIRE

PE CERTIFICATE OF AUTHORIZATION # 01191

ENGINEER:		PE#:	DISCIPLINE:	
SDK	SHELTON D. KEISLING	18260	ELECTRICAL	E
TMS	TERRANCE M. SUPER	10926	ELECTRICAL	E

iONNA™

PLANS PREPARED FOR:

AGI

PLANS PREPARED BY:

SSC

DRAWING NOTICE:

THIS DRAWING HAS NOT BEEN PUBLISHED AND IS THE SOLE PROPERTY OF SSC, INC. AND IS LENT TO THE BORROWER FOR THEIR CONFIDENTIAL USE ONLY, AND IN CONSIDERATION OF THE LOAN OF THIS DRAWING, THE BORROWER PROMISES AND AGREES TO RETURN IT UPON REQUEST AND AGREES THAT IT WILL NOT BE REPRODUCED, COPIED, LENT OR OTHERWISE DISPOSED OF DIRECTLY OR INDIRECTLY, NOR USED FOR ANY PURPOSE OTHER THAN FOR WHICH IT IS FURNISHED.

SUBMITTALS:

DESCRIPTION	DATE	BY	REV
ISSUED FOR REVIEW	09/20/24	IBA	A
ISSUED FOR PERMITTING	09/25/24	IBA	0
REVISED PER AHJ COMMENTS	11/15/24	IBA	1

APPLICANT SITE NAME:

WHOLE FOOD (PORTSMOUTH)

APPLICANT SITE NUMBER:

AGI-INA-NH-0001

SITE ADDRESS:

1600 WOODBURY AVE
PORTSMOUTH, NH 03801

SHEET DESCRIPTION:

EQUIPMENT DETAILS (1 OF 3)

SHEET #:

C-3.0

Docusign Envelope ID: 1C4F2B64-D77B-41F4-BC3F-6BCF8F1E1FE7

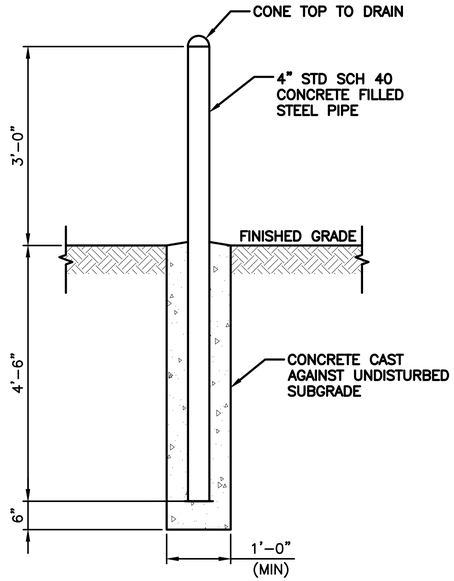

SPECIFICATIONS:

MATERIAL:	STEEL
FINISH:	PRIME AND PAINT OR INSTALL COVERS
COLORING:	WHITE, RAL 9016

BOLLARD DETAIL | 1

NOTE:

1. EVCS SIGN FOR REFERENCE ONLY. ACTUAL SIGN MAY BE DIFFERENT.

SPECIFICATIONS:

DIMENSIONS (WxH): 18" x 24" OR 12" x 18"

SIGNAGE DETAIL | 2

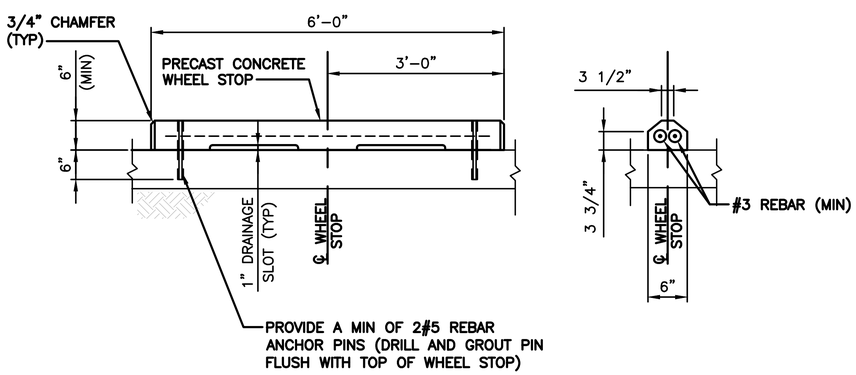

ELEVATION

END VIEW

WHEELSTOP DETAIL | 4

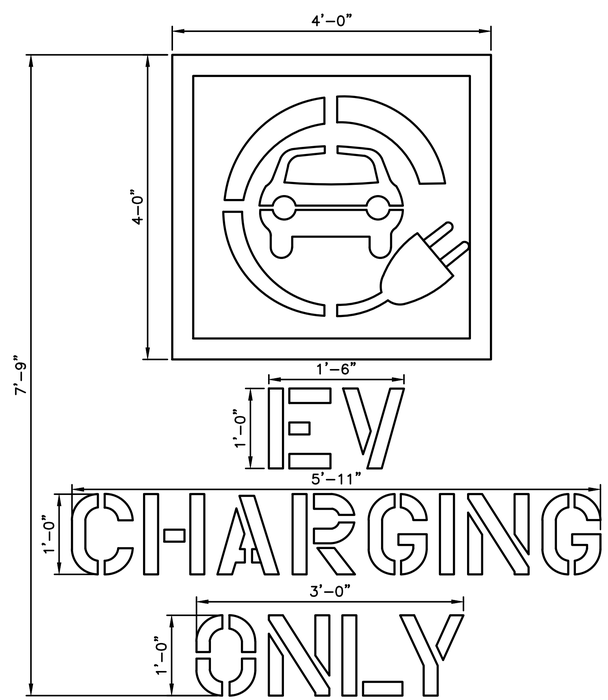

STENCIL NOTES:

1. USE ON ALL STANDARD & VAN ACCESSIBLE STALLS WHERE APPLICABLE
2. EVCS STALL SHALL PROVIDE SURFACE MARKING STATION "EV CHARGING ONLY" IN LETTER 12" HIGH MIN. THE CENTER LINE OF THE TEXT SHALL BE A MAX. OF 6" FROM THE CENTER LINE OF THE STALL & ITS LOWER CORNER AT, OR LOWER SIDE ALIGNED WITH, THE END OF THE STALL LENGTH.
3. BOTTOM OF STENCIL TO BE PLACE AT THE LEADING EDGE OF THE PROPOSED STALL.
4. PROVIDE 4 1/2" SPACING BETWEEN STENCILS.
5. PAVEMENT MARKING TO BE PAINTED WHITE.
6. PAINT SHALL BE WATER BORNE OR SOLVENT BORNE, COLORS AS SHOWN OR SPECIFIED HEREIN. PAVEMENT MARKING PAINTS SHALL COMPLY WITH APPLICABLE STATE AND LOCAL LAWS ENACTED TO ENSURE COMPLIANCE WITH FEDERAL CLEAN AIR STANDARDS. PAINT MATERIALS SHALL CONFORM TO THE RESTRICTIONS OF THE LOCAL AIR POLLUTION CONTROL DISTRICT.
7. WATER BORNE PAINT" PAINTS SHALL CONFORM TO FS TT-P-1952.
8. SOLVENT BORNE PAINT: PAINT SHALL CONFORM TO FS A-A-2886 OR AASHTO M248. PAINT SHALL BE NON BLEEDING, QUICK DRYING, AND ALKYD PETROLEUM BASE PAINT SUITABLE FOR TRAFFIC BEARING SURFACE AND BE MIXED IN ACCORDANCE WITH MANUFACTURER'S INSTRUCTIONS BEFORE APPLICATION.

STENCIL DETAIL | 3

STAMP:

11/18/2024
STATE OF NEW HAMPSHIRE
SHELTON DOUGLAS KEISLING No. 18260
LICENSED PROFESSIONAL ENGINEER
EF94D8A5B80B407...

ENGINEERING LICENSE:
STATE OF NEW HAMPSHIRE
PE CERTIFICATE OF AUTHORIZATION # 01191

ENGINEER:		PE#:	DISCIPLINE:	
SDK	SHELTON D. KEISLING	18260	ELECTRICAL	E
TMS	TERRANCE M. SUPER	10926	ELECTRICAL	E

iONNA™

PLANS PREPARED FOR:
AGI

PLANS PREPARED BY:
SSC

DRAWING NOTICE:
THIS DRAWING HAS NOT BEEN PUBLISHED AND IS THE SOLE PROPERTY OF SSC, INC. AND IS LENT TO THE BORROWER FOR THEIR CONFIDENTIAL USE ONLY, AND IN CONSIDERATION OF THE LOAN OF THIS DRAWING, THE BORROWER PROMISES AND AGREES TO RETURN IT UPON REQUEST AND AGREES THAT IT WILL NOT BE REPRODUCED, COPIED, LENT OR OTHERWISE DISPOSED OF DIRECTLY OR INDIRECTLY, NOR USED FOR ANY PURPOSE OTHER THAN FOR WHICH IT IS FURNISHED.

SUBMITTALS:

DESCRIPTION	DATE	BY	REV
ISSUED FOR REVIEW	09/20/24	IBA	A
ISSUED FOR PERMITTING	09/25/24	IBA	0
REVISED PER AHJ COMMENTS	11/15/24	IBA	1

APPLICANT SITE NAME:
WHOLE FOOD (PORTSMOUTH)

APPLICANT SITE NUMBER:
AGI-INA-NH-0001

SITE ADDRESS:
1600 WOODBURY AVE
PORTSMOUTH, NH 03801

SHEET DESCRIPTION:
EQUIPMENT DETAILS (2 OF 3)

SHEET #:
C-3.1

Docusign Envelope ID: 1C4F2B64-D77B-41F4-BC3F-6BCF8F1E1FE7

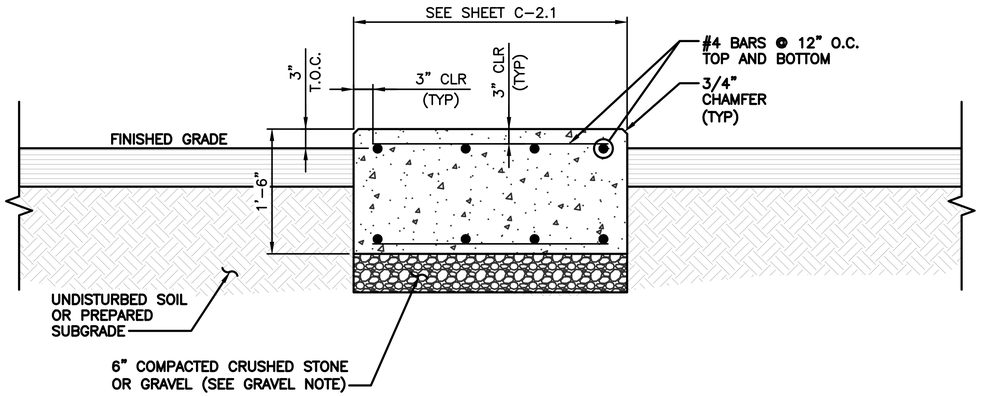

GRAVEL NOTE:

GRAVEL SHALL BE NATURAL OR CRUSHED STONE WITH 100 PERCENT PASSING 1 INCH SIEVE.

FOUNDATION NOTE:

MINIMUM SOIL BEARING CAPACITY OF 1500 PSF IS ASSUMED IN ALL FOUNDATIONS AND SLAB AREAS. (GENERAL CONTRACTOR SHALL VERIFY PRIOR TO CONSTRUCTION)

GROUNDING NOTE:

SEE SHEET G-1.0, DETAIL 2 FOR SWITCHBOARD FOUNDATION GROUNDING PLAN.

SWITCHBOARD FOUNDATION SECTION | 1

DETAIL NOT USED | 3

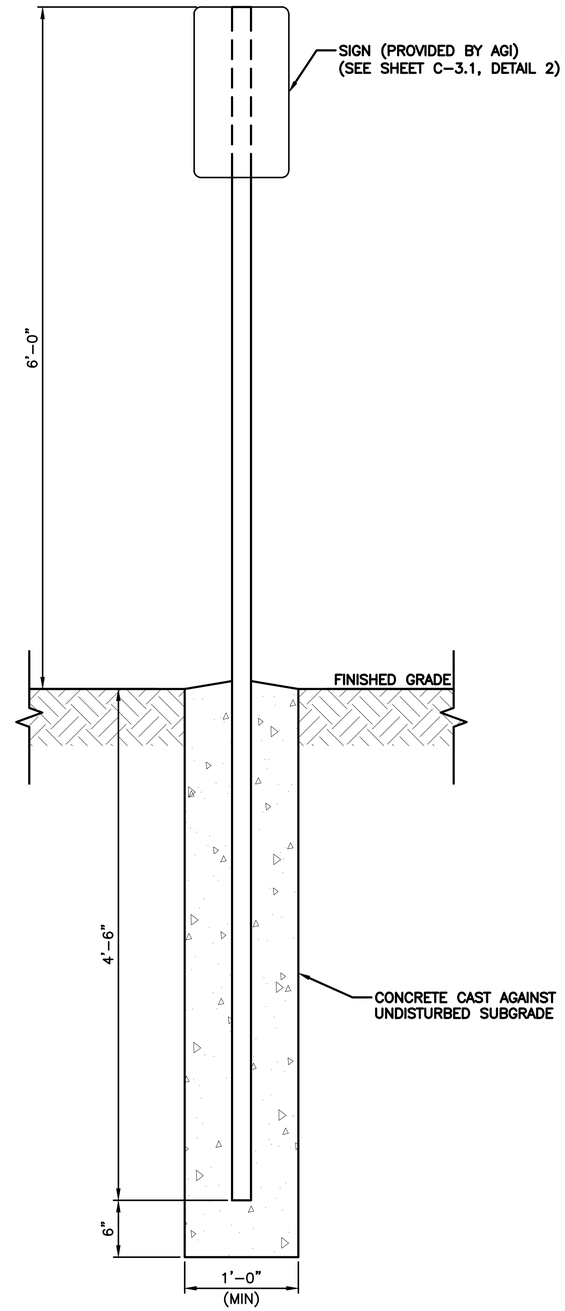

SPECIFICATIONS:

MATERIAL:	STEEL
FINISH:	POWDER COATED – SEMI GLOSS
COLORING:	COORDINATE W/ AGI/LANDLORD

EV SIGNAGE DETAIL | 2

STAMP:

STATE OF NEW HAMPSHIRE
SHELTON DOUGLAS KEISLING
No. 18260
LICENSED
PROFESSIONAL ENGINEER
11/18/2024
EF94D8A5B80B407...

ENGINEERING LICENSE:

STATE OF NEW HAMPSHIRE

PE CERTIFICATE OF AUTHORIZATION # 01191

ENGINEER:		PE#:	DISCIPLINE:	
SDK	SHELTON D. KEISLING	18260	ELECTRICAL	E
TMS	TERRANCE M. SUPER	10926	ELECTRICAL	E

iONNA™

PLANS PREPARED FOR:

AGI

PLANS PREPARED BY:

SSC

DRAWING NOTICE:

THIS DRAWING HAS NOT BEEN PUBLISHED AND IS THE SOLE PROPERTY OF SSC, INC. AND IS LENT TO THE BORROWER FOR THEIR CONFIDENTIAL USE ONLY, AND IN CONSIDERATION OF THE LOAN OF THIS DRAWING, THE BORROWER PROMISES AND AGREES TO RETURN IT UPON REQUEST AND AGREES THAT IT WILL NOT BE REPRODUCED, COPIED, LENT OR OTHERWISE DISPOSED OF DIRECTLY OR INDIRECTLY, NOR USED FOR ANY PURPOSE OTHER THAN FOR WHICH IT IS FURNISHED.

SUBMITTALS:

DESCRIPTION	DATE	BY	REV
ISSUED FOR REVIEW	09/20/24	IBA	A
ISSUED FOR PERMITTING	09/25/24	IBA	0
REVISED PER AHJ COMMENTS	11/15/24	IBA	1

APPLICANT SITE NAME:

WHOLE FOOD (PORTSMOUTH)

APPLICANT SITE NUMBER:

AGI-INA-NH-0001

SITE ADDRESS:

1600 WOODBURY AVE
PORTSMOUTH, NH 03801

SHEET DESCRIPTION: EQUIPMENT DETAILS (3 OF 3)

SHEET #: C-3.2

Docusign Envelope ID: 1C4F2B64-D77B-41F4-BC3F-6BCF8F1E1FE7

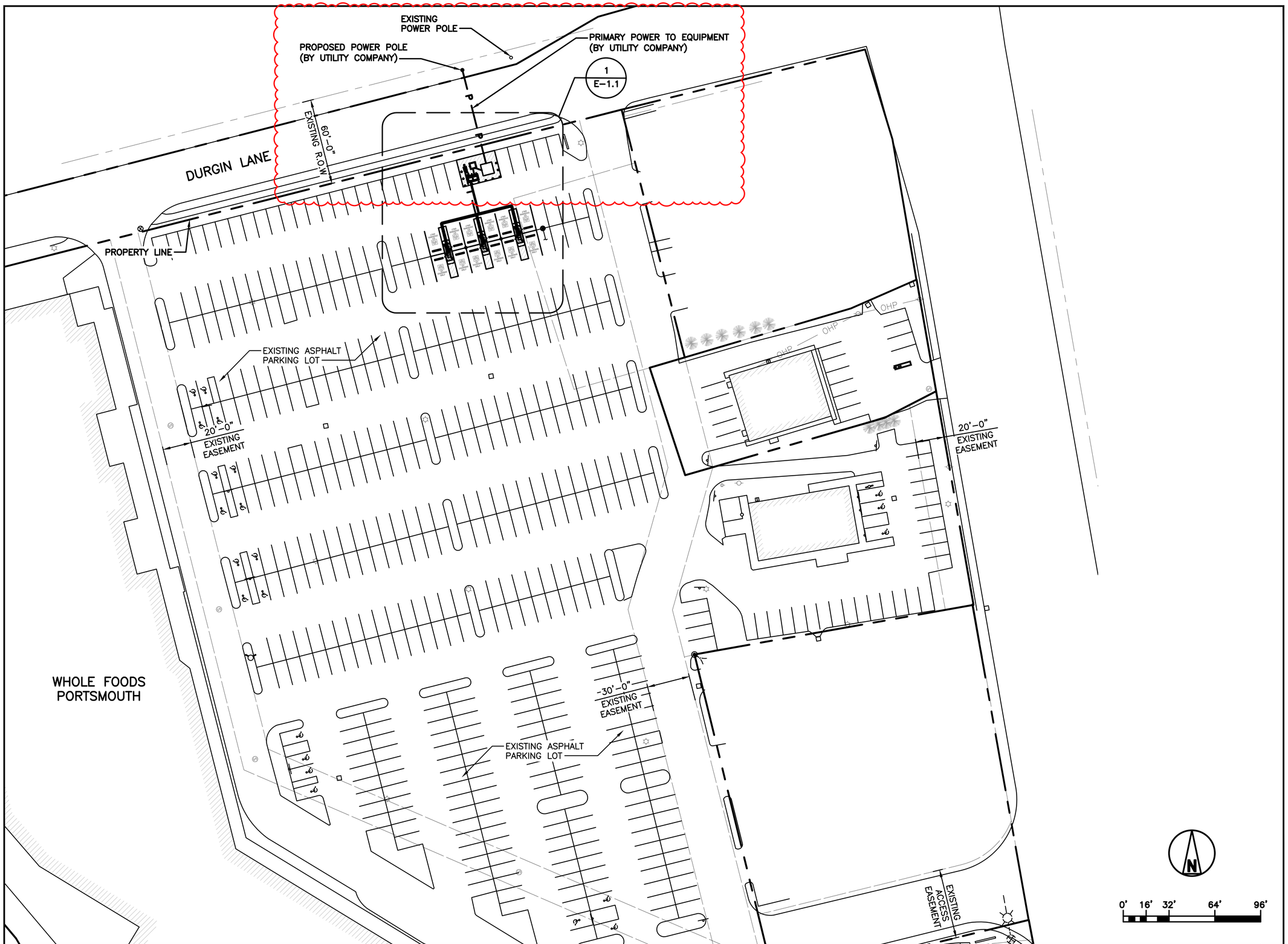

UTILITY PLAN 1

STAMP:

STATE OF NEW HAMPSHIRE
SHELTON DOUGLAS KEISLING
No. 18260
LICENSED
PROFESSIONAL ENGINEER
11/18/2024
EF94D8A5B80B407...

ENGINEERING LICENSE:

STATE OF NEW HAMPSHIRE

PE CERTIFICATE OF AUTHORIZATION # 01191

ENGINEER:		PE#:	DISCIPLINE:	
SDK	SHELTON D. KEISLING	18260	ELECTRICAL	E
TMS	TERRANCE M. SUPER	10926	ELECTRICAL	E

iONNA™

PLANS PREPARED FOR:

AGI

PLANS PREPARED BY:

SSC

DRAWING NOTICE:

THIS DRAWING HAS NOT BEEN PUBLISHED AND IS THE SOLE PROPERTY OF SSC, INC. AND IS LENT TO THE BORROWER FOR THEIR CONFIDENTIAL USE ONLY, AND IN CONSIDERATION OF THE LOAN OF THIS DRAWING, THE BORROWER PROMISES AND AGREES TO RETURN IT UPON REQUEST AND AGREES THAT IT WILL NOT BE REPRODUCED, COPIED, LENT OR OTHERWISE DISPOSED OF DIRECTLY OR INDIRECTLY, NOR USED FOR ANY PURPOSE OTHER THAN FOR WHICH IT IS FURNISHED.

SUBMITTALS:

DESCRIPTION	DATE	BY	REV
ISSUED FOR REVIEW	09/20/24	IBA	A
ISSUED FOR PERMITTING	09/25/24	IBA	0
REVISED PER AHJ COMMENTS	11/15/24	IBA	1

APPLICANT SITE NAME:

WHOLE FOOD (PORTSMOUTH)

APPLICANT SITE NUMBER:

AGI-INA-NH-0001

SITE ADDRESS:

1600 WOODBURY AVE
PORTSMOUTH, NH 03801

SHEET DESCRIPTION: UTILITY PLAN

SHEET #: E-1.0

Docusign Envelope ID: 1C4F2B64-D77B-41F4-BC3F-6BCF8F1E1FE7

EQUIPMENT NOTES:

1. PROPOSED DUAL L3 DISPENSER (TYP OF 6)
2. PROPOSED 3000A, 480Y/277V SWITCHBOARD "MDP"
3. PROPOSED UTILITY TRANSFORMER (BY UTILITY COMPANY)
4. PROPOSED METER SOCKET
5. PROPOSED CT CABINET
6. PROPOSED SITE COMM BOX
7. PROPOSED MINI POWER-ZONE
8. RELOCATED LIGHT POLE

CONDUIT ROUTING NOTES:

- C1 (9) 4" PVC SCH40 CONDUITS FOR POWER FROM UTILITY TRANSFORMER TO CT CABINET
- C2 (9) 4" PVC SCH40 CONDUITS FOR POWER FROM CT CABINET TO SWITCHBOARD "MDP"
- C3 1" PVC SCH40 CONDUIT FOR POWER FROM SWITCHBOARD "MDP" TO MINI POWER-ZONE
- C4 (2) 3" PVC SCH40 CONDUITS FOR POWER FROM SWITCHBOARD "MDP" TO 400KW DC DISPENSER (TYP OF 6)
- C5 1" PVC SCH40 CONDUIT FOR FIBER FROM SITE COMMS BOX TO 400KW DC DISPENSER (TYP OF 6)
- C6 EXISTING REROUTED CONDUIT FOR POWER FROM SOURCE TO RELOCATED LIGHT POLE
- C7 3/4" CONDUIT FOR POWER FROM PANEL "LP-1" TO CANOPY LIGHTING (TYP OF 3)

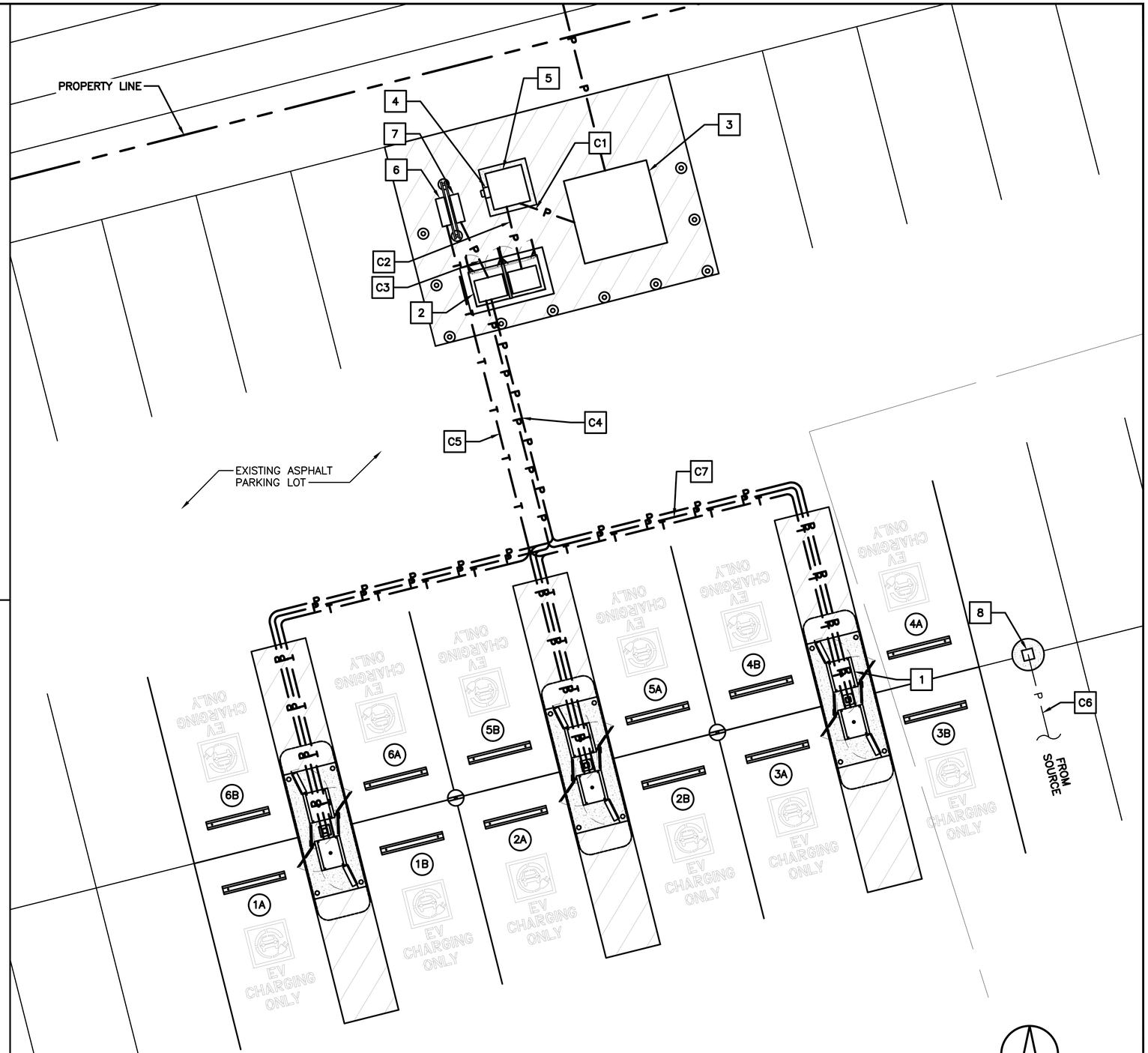

PARKING STALL LEGEND	
DESCRIPTION	SYMBOL
PROPOSED L3 DISPENSER	#

LINE TYPE LEGEND	
FIBER	T
POWER	P

0' 1' 2' 4' 8' 12' 16'

ENLARGED UTILITY PLAN

1

STAMP:

STATE OF NEW HAMPSHIRE
SHELTON DOUGLAS KEISLING
No. 18260
LICENSED
PROFESSIONAL ENGINEER

11/18/2024

EF94D8A5B80B407...

ENGINEERING LICENSE:

STATE OF NEW HAMPSHIRE

PE CERTIFICATE OF AUTHORIZATION # 01191

ENGINEER:		PE#:	DISCIPLINE:	
SDK	SHELTON D. KEISLING	18260	ELECTRICAL	E
TMS	TERRANCE M. SUPER	10926	ELECTRICAL	E

iONNA™

PLANS PREPARED FOR:

AGI

PLANS PREPARED BY:

SSC

DRAWING NOTICE:

THIS DRAWING HAS NOT BEEN PUBLISHED AND IS THE SOLE PROPERTY OF SSC, INC. AND IS LENT TO THE BORROWER FOR THEIR CONFIDENTIAL USE ONLY, AND IN CONSIDERATION OF THE LOAN OF THIS DRAWING, THE BORROWER PROMISES AND AGREES TO RETURN IT UPON REQUEST AND AGREES THAT IT WILL NOT BE REPRODUCED, COPIED, LENT OR OTHERWISE DISPOSED OF DIRECTLY OR INDIRECTLY, NOR USED FOR ANY PURPOSE OTHER THAN FOR WHICH IT IS FURNISHED.

SUBMITTALS:

DESCRIPTION	DATE	BY	REV
ISSUED FOR REVIEW	09/20/24	IBA	A
ISSUED FOR PERMITTING	09/25/24	IBA	0
REVISED PER AHJ COMMENTS	11/15/24	IBA	1

APPLICANT SITE NAME:

WHOLE FOOD (PORTSMOUTH)

APPLICANT SITE NUMBER:

AGI-INA-NH-0001

SITE ADDRESS:

1600 WOODBURY AVE
PORTSMOUTH, NH 03801

SHEET DESCRIPTION:

ENLARGED UTILITY PLAN

SHEET #:

E-1.1

Docusign Envelope ID: 1C4F2B64-D77B-41F4-BC3F-6BCF8F1E1FE7

GENERAL NOTES:

1. PROPOSED UTILITY CT'S SHALL BE LOCATED IN UTILITY APPROVED PAD MOUNTED CT CABINET. PROPOSED METER SOCKET SHALL BE MOUNTED ON UTILITY RACK.
2. WIRE AND CABLE SHALL BE 600V, TYPE THHN/THWN-2, UNLESS OTHERWISE INDICATED.
3. ALL EQUIPMENT TERMINATIONS ARE ASSUMED TO BE RATED 75-DEG C OR HIGHER. IF NOT, THEN CONDUCTOR SIZES SHALL BE ADJUSTED FOR 60 DEG C RATING PER NEC 110.14.(C)(1) WHERE APPLICABLE.
4. ALL CONDUITS ACCESSIBLE TO THE GENERAL PUBLIC OR WHICH ARE SUSCEPTIBLE TO CAN BE DAMAGE SHALL BE RIGID GALVANIZED STEEL.
5. ALL ELECTRICAL EQUIPMENT SHALL BE LABELED, LISTED, OR CERTIFIED BY A NATIONALLY RECOGNIZED TESTING LABORATORY ACCREDITED BY THE UNITED STATES OCCUPATIONAL SAFETY HEALTH ADMINISTRATION.
6. THE AFOREMENTIONED STANDARDS IDENTIFY THE REQUIREMENTS MET BY THE EQUIPMENT, INCLUDING BUT NOT LIMITED TO:

- PROTECTION AGAINST ELECTRIC SHOCK
- OVERLOAD AND SHORT CIRCUIT PROTECTION
- FAULT PROTECTION
- DEGREES OF PROTECTION AGAINST ACCESS TO HAZARDOUS LIVE PARTS.
- INTERLOCK THAT DE-ENERGIZES THE ELECTRIC VEHICLE CONNECTOR WHENEVER THE ELECTRICAL CONNECTOR IS UNCOUPLED FROM THE ELECTRIC VEHICLE.
- AUTOMATIC DE-ENERGIZATION OF CHARGING CABLE UPON EXPOSURE TO STRAIN.

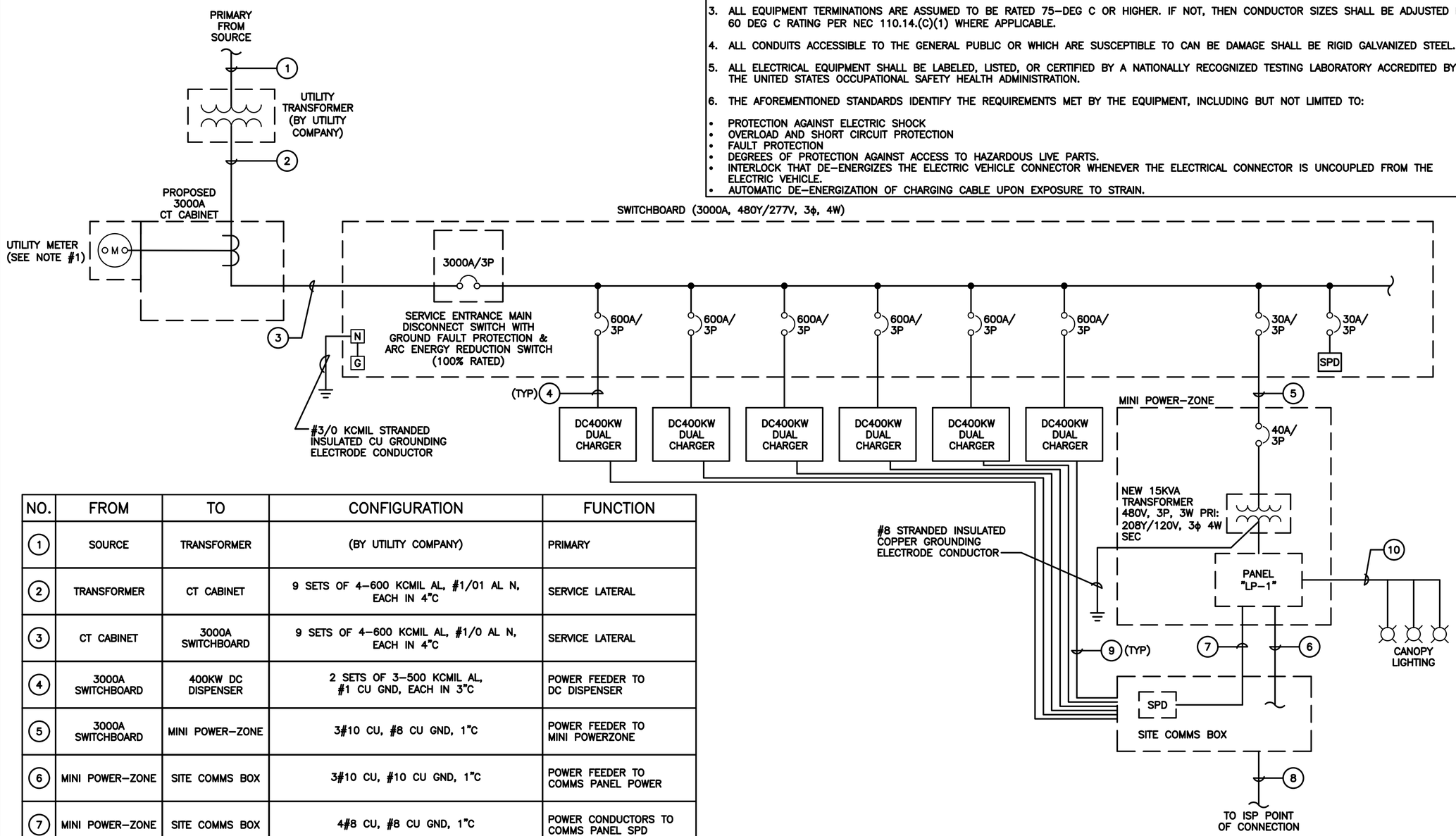

NO.	FROM	TO	CONFIGURATION	FUNCTION
1	SOURCE	TRANSFORMER	(BY UTILITY COMPANY)	PRIMARY
2	TRANSFORMER	CT CABINET	9 SETS OF 4-600 KCMIL AL, #1/01 AL N, EACH IN 4"C	SERVICE LATERAL
3	CT CABINET	3000A SWITCHBOARD	9 SETS OF 4-600 KCMIL AL, #1/0 AL N, EACH IN 4"C	SERVICE LATERAL
4	3000A SWITCHBOARD	400KW DC DISPENSER	2 SETS OF 3-500 KCMIL AL, #1 CU GND, EACH IN 3"C	POWER FEEDER TO DC DISPENSER
5	3000A SWITCHBOARD	MINI POWER-ZONE	3#10 CU, #8 CU GND, 1"C	POWER FEEDER TO MINI POWERZONE
6	MINI POWER-ZONE	SITE COMMS BOX	3#10 CU, #10 CU GND, 1"C	POWER FEEDER TO COMMS PANEL POWER
7	MINI POWER-ZONE	SITE COMMS BOX	4#8 CU, #8 CU GND, 1"C	POWER CONDUCTORS TO COMMS PANEL SPD
8	SITE COMMS BOX	ISP POINT OF CONNECTION	FIBER OPTIC CABLE	FIBER FROM ISP POINT OF CONNECTION
9	SITE COMMS BOX	400KW DC DISPENSER	FIBER OPTIC CABLE, 1"C	FIBER TO DC DISPENSER
10	PANEL "LP-1"	CANOPY LIGHTING	2#12, #12 GND, 3/4"C (LIGHTS CONTROLLED BY PHOTOCELL)	POWER TO CANOPY LIGHTING

ELECTRICAL ONE-LINE DIAGRAM

1

STAMP:

STATE OF NEW HAMPSHIRE
SHELTON DOUGLAS KEISLING No. 18260
LICENSED PROFESSIONAL ENGINEER
11/18/2024
EF94D8A5B80B407...

ENGINEERING LICENSE:
STATE OF NEW HAMPSHIRE
PE CERTIFICATE OF AUTHORIZATION # 01191

ENGINEER:		PE#:	DISCIPLINE:	
SDK	SHELTON D. KEISLING	18260	ELECTRICAL	E
TMS	TERRANCE M. SUPER	10926	ELECTRICAL	E

iONNA™

PLANS PREPARED FOR:
AGI

PLANS PREPARED BY:
SSC

DRAWING NOTICE:
THIS DRAWING HAS NOT BEEN PUBLISHED AND IS THE SOLE PROPERTY OF SSC, INC. AND IS LENT TO THE BORROWER FOR THEIR CONFIDENTIAL USE ONLY, AND IN CONSIDERATION OF THE LOAN OF THIS DRAWING, THE BORROWER PROMISES AND AGREES TO RETURN IT UPON REQUEST AND AGREES THAT IT WILL NOT BE REPRODUCED, COPIED, LENT OR OTHERWISE DISPOSED OF DIRECTLY OR INDIRECTLY, NOR USED FOR ANY PURPOSE OTHER THAN FOR WHICH IT IS FURNISHED.

SUBMITTALS:

DESCRIPTION	DATE	BY	REV
ISSUED FOR REVIEW	09/20/24	IBA	A
ISSUED FOR PERMITTING	09/25/24	IBA	0
REVISED PER AHJ COMMENTS	11/15/24	IBA	1

APPLICANT SITE NAME:
WHOLE FOOD (PORTSMOUTH)

APPLICANT SITE NUMBER:
AGI-INA-NH-0001

SITE ADDRESS:
1600 WOODBURY AVE
PORTSMOUTH, NH 03801

SHEET DESCRIPTION:
ELECTRICAL ONE-LINE DIAGRAM

SHEET #:
E-2.0

Docusign Envelope ID: 1C4F2B64-D77B-41F4-BC3F-6BCF8F1E1FE7

PANEL NAME:	SWITCHBOARD	**MAINS TYPE:**	MCB	**DISTRIBUTION TYPE:**	277/480Y, 3-PH, 4-WIRE
		MAINS RATING (A):	3000	**RATED FAULT CURRENT:**	65 KAIC (VERIFY W/ UTILITY PRIOR TO ORDERING)
STATUS:	NEW	**BUS RATING (A):**	3000	**RATING TYPE:**	FULLY RATED
LOCATION:	OUTSIDE	**ENCLOSURE:**	NEMA 3R	**SERVICE ENTRANCE RATED:**	YES
SUPPLY FROM:	TRANSFORMER	**MOUNTING:**	PAD-MOUNTED	**ISOLATED GND BAR:**	NO

CKT #	LOAD L	LOAD R	LOAD HV	LOAD M	LOAD C	DESCRIPTION	NOTE	AMP	POLE	TOTAL PER PHASE IN KVA A	B	C	AMP	POLE	NOTE	DESCRIPTION	LOAD L	LOAD R	LOAD HV	LOAD M	LOAD C	CKT #
1					133.33	PROPOSED DC400KW CHARGER EVCS-01		600	3	266.66			600	3		PROPOSED DC400KW CHARGER EVCS-02					133.33	2
3					133.33						266.66										133.33	4
5					133.33							266.66									133.33	6
7					133.33	PROPOSED DC400KW CHARGER EVCS-03		600	3	266.66			600	3		PROPOSED DC400KW CHARGER EVCS-04					133.33	8
9					133.33						266.66										133.33	10
11					133.33							266.66									133.33	12
13					133.33	PROPOSED DC400KW CHARGER EVCS-05		600	3	266.66			600	3		PROPOSED DC400KW CHARGER EVCS-06					133.33	14
15					133.33						266.66										133.33	16
17					133.33							266.66									133.33	18
19					1.80	MINI POWER-ZONE		30	3	1.80			30	3		SURGE PROTECTION DEVICE						20
21					0.00						0.00											22
23					0.18							0.18										24
									TOTAL KVA =	801.78	799.98	800.16					2401.92	TOTAL CONN KVA				
									TOTAL AMPS =	2,894.5	2,888.0	2,888.7					2889.06	TOTAL CONN AMPS				

	DEMAND FACTOR	A	B	C	TOTAL	NOTES
LIGHTING	1.25	0.00	0.00	0.00	0.00	
FIRST 10KVA RECEPTACLES (3.33 KVA PER PHASE)	1.00	0.00	0.00	0.00	0.00	
REMAINING RECEPTACLES	0.50	0.00	0.00	0.00	0.00	
HVAC EQUIP	1.00	0.00	0.00	0.00	0.00	
25% OF LARGEST MOTOR	0.25	0.00	0.00	0.00	0.00	
MISCELLANEOUS	1.00	0.00	0.00	0.00	0.00	
CONTINUOUS	1.25	1002.23	999.98	1000.20	3002.40	
TOTALS (KVA)		1002.23	999.98	1000.20	3002.40	
TOTALS (A)		3618.14	3610.02	3610.83	3611.33	

PANEL NAME:	PANELBOARD "LP-1"	**MAINS TYPE:**	MCB	**DISTRIBUTION TYPE:**	120/208Y, 3-PH, 4-WIRE
		MAINS RATING (A):	60	**RATED FAULT CURRENT:**	22 KAIC
STATUS:	NEW	**BUS RATING (A):**	60	**RATING TYPE:**	FULLY RATED
LOCATION:	OUTSIDE	**ENCLOSURE:**	NEMA 3R	**SERVICE ENTRANCE RATED:**	YES
SUPPLY FROM:	TRANSFORMER "LP-1"	**MOUNTING:**	H-FRAME	**ISOLATED GND BAR:**	NO

CKT #	LOAD L	LOAD R	LOAD HV	LOAD M	LOAD C	DESCRIPTION	NOTE	AMP	POLE	TOTAL PER PHASE IN KVA A	B	C	AMP	POLE	NOTE	DESCRIPTION	LOAD L	LOAD R	LOAD HV	LOAD M	LOAD C	CKT #
1				1.50		SITE COMMS BOX PWR		30	1	1.80			20	1		CANOPY LIGHTING	0.30					2
3						SPACE					0.00					SPACE						4
5		0.18				RECEPTACLE		20	1			0.18				SPACE						6
7						COMMS SPD		30	3	0.00						SPACE						8
9											0.00					SPACE						10
11												0.00				SPACE						12
									TOTAL KVA =	1.80	0.00	0.18					1.98	TOTAL CONN KVA				
									TOTAL AMPS =	15.0	-	1.5					5.50	TOTAL CONN AMPS				

	DEMAND FACTOR	A	B	C	TOTAL	NOTES
LIGHTING	1.25	0.38	0.00	0.00	0.38	
FIRST 10KVA RECEPTACLES (3.33 KVA PER PHASE)	1.00	0.00	0.00	0.18	0.18	
REMAINING RECEPTACLES	0.50	0.00	0.00	0.00	0.00	
HVAC EQUIP	1.00	0.00	0.00	0.00	0.00	
25% OF LARGEST MOTOR	0.25	0.00	0.00	0.00	0.00	
MISCELLANEOUS	1.00	1.50	0.00	0.00	1.50	
CONTINUOUS	1.25	0.00	0.00	0.00	0.00	
TOTALS (KVA)		1.88	0.00	0.18	2.06	
TOTALS (A)		15.63	0.00	1.50	5.70	

PANELBOARD NOTES:

1. PROVIDE EQUIPMENT WITH SUFFICIENT INTERRUPTING CAPACITY (AIC) REQUIRED FOR A SAFE INSTALLATION. AIC RATING NOTED ON EACH PANELBOARD SCHEDULE IS MINIMUM RATING ACCEPTED WITHOUT ADDITIONAL DOCUMENTATION THAT INDICATES OTHERWISE.
2. CIRCUITS SHALL BE REARRANGED AS REQUIRED TO MAINTAIN THE MOST BALANCED LOADS ON EACH PHASE WITHIN EACH PANEL. PROVIDE TYPED PANEL DIRECTORY MOUNTED PER MANUFACTURER'S RECOMMENDATIONS.

PANEL SCHEDULE

1

STAMP:

STATE OF NEW HAMPSHIRE
SHELTON DOUGLAS KEISLING
No. 18260
LICENSED
PROFESSIONAL ENGINEER
11/18/2024
EF94D8A5B80B407...

ENGINEERING LICENSE:
STATE OF NEW HAMPSHIRE
PE CERTIFICATE OF AUTHORIZATION # 01191

ENGINEER:		PE#:	DISCIPLINE:	
SDK	SHELTON D. KEISLING	18260	ELECTRICAL	E
TMS	TERRANCE M. SUPER	10926	ELECTRICAL	E

iONNA™

PLANS PREPARED FOR:
AGI

PLANS PREPARED BY:
SSC

DRAWING NOTICE:
THIS DRAWING HAS NOT BEEN PUBLISHED AND IS THE SOLE PROPERTY OF SSC, INC. AND IS LENT TO THE BORROWER FOR THEIR CONFIDENTIAL USE ONLY, AND IN CONSIDERATION OF THE LOAN OF THIS DRAWING, THE BORROWER PROMISES AND AGREES TO RETURN IT UPON REQUEST AND AGREES THAT IT WILL NOT BE REPRODUCED, COPIED, LENT OR OTHERWISE DISPOSED OF DIRECTLY OR INDIRECTLY, NOR USED FOR ANY PURPOSE OTHER THAN FOR WHICH IT IS FURNISHED.

SUBMITTALS:

DESCRIPTION	DATE	BY	REV
ISSUED FOR REVIEW	09/20/24	IBA	A
ISSUED FOR PERMITTING	09/25/24	IBA	0
REVISED PER AHJ COMMENTS	11/15/24	IBA	1

APPLICANT SITE NAME:
WHOLE FOOD (PORTSMOUTH)

APPLICANT SITE NUMBER:
AGI-INA-NH-0001

SITE ADDRESS:
1600 WOODBURY AVE
PORTSMOUTH, NH 03801

SHEET DESCRIPTION: PANEL SCHEDULE

SHEET #: E-2.1

Docusign Envelope ID: 1C4F2B64-D77B-41F4-BC3F-6BCF8F1E1FE7

ELECTRICAL NOTES:

1. ALL WORK SHALL CONFORM TO THE NATIONAL ELECTRICAL CODE AND THE LOCAL BUILDING CODES. ALL COMPONENTS SHALL BE U.L. LISTED.
2. ALL COMPONENTS SHALL BE AS SPECIFIED OR EQUIVALENT AS APPROVED BY AGI
3. BELOW GRADE EXOTHERMIC CONNECTIONS ARE TYPE–TA.
4. CONTRACTOR SHALL INSTALL SLIP JOINTS ON ALL CONDUITS.

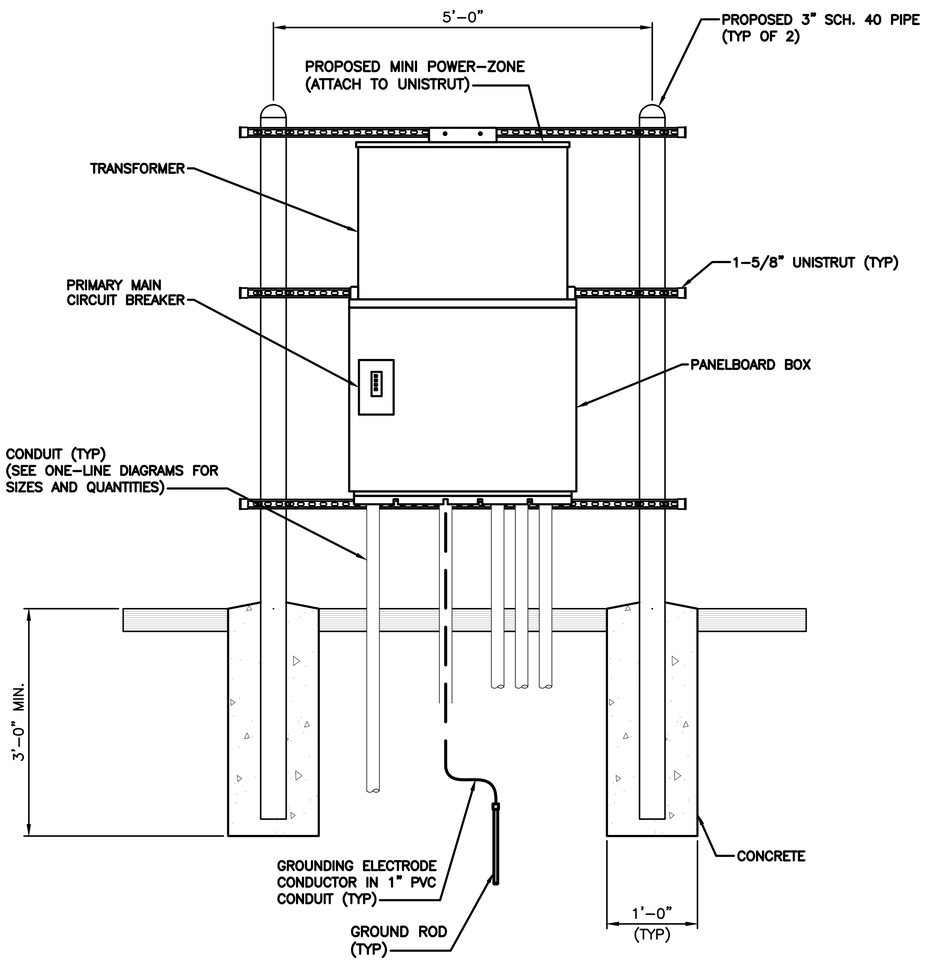

UTILITY RACK DETAIL (POWERZONE) | 1

ELECTRICAL NOTES:

1. ALL WORK SHALL CONFORM TO THE NATIONAL ELECTRICAL CODE AND THE LOCAL BUILDING CODES. ALL COMPONENTS SHALL BE U.L. LISTED.
2. ALL COMPONENTS SHALL BE AS SPECIFIED OR EQUIVALENT AS APPROVED BY AGI
3. BELOW GRADE EXOTHERMIC CONNECTIONS ARE TYPE–TA.
4. CONTRACTOR SHALL INSTALL SLIP JOINTS ON ALL CONDUITS.

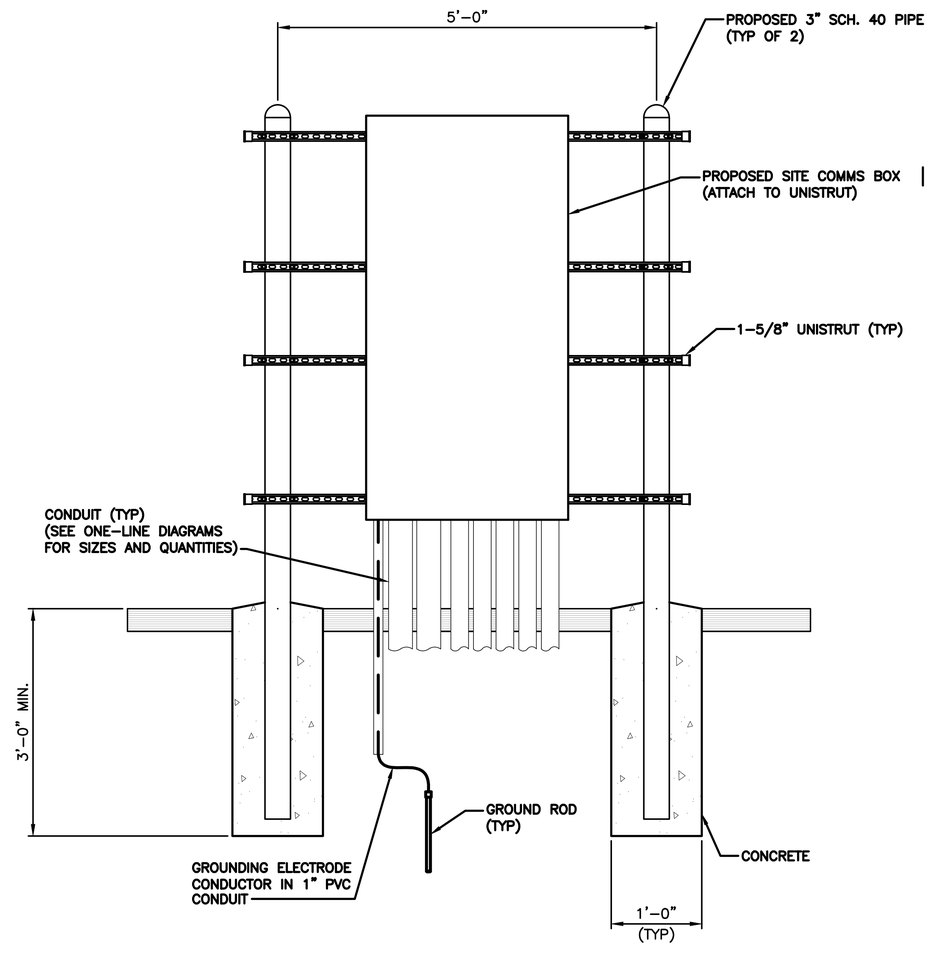

UTILITY RACK DETAIL (SITE COMMS BOX) | 2

STAMP:

STATE OF NEW HAMPSHIRE
SHELTON DOUGLAS KEISLING No. 18260
LICENSED PROFESSIONAL ENGINEER
11/18/2024
EF94D8A5B80B407...

ENGINEERING LICENSE:

STATE OF NEW HAMPSHIRE

PE CERTIFICATE OF AUTHORIZATION # 01191

ENGINEER:		PE#:	DISCIPLINE:	
SDK	SHELTON D. KEISLING	18260	ELECTRICAL	E
TMS	TERRANCE M. SUPER	10926	ELECTRICAL	E

iONNA™

PLANS PREPARED FOR:

AGI

PLANS PREPARED BY:

SSC

DRAWING NOTICE:

THIS DRAWING HAS NOT BEEN PUBLISHED AND IS THE SOLE PROPERTY OF SSC, INC. AND IS LENT TO THE BORROWER FOR THEIR CONFIDENTIAL USE ONLY, AND IN CONSIDERATION OF THE LOAN OF THIS DRAWING, THE BORROWER PROMISES AND AGREES TO RETURN IT UPON REQUEST AND AGREES THAT IT WILL NOT BE REPRODUCED, COPIED, LENT OR OTHERWISE DISPOSED OF DIRECTLY OR INDIRECTLY, NOR USED FOR ANY PURPOSE OTHER THAN FOR WHICH IT IS FURNISHED.

SUBMITTALS:

DESCRIPTION	DATE	BY	REV
ISSUED FOR REVIEW	09/20/24	IBA	A
ISSUED FOR PERMITTING	09/25/24	IBA	0
REVISED PER AHJ COMMENTS	11/15/24	IBA	1

APPLICANT SITE NAME:

WHOLE FOOD (PORTSMOUTH)

APPLICANT SITE NUMBER:

AGI-INA-NH-0001

SITE ADDRESS:

1600 WOODBURY AVE
PORTSMOUTH, NH 03801

SHEET DESCRIPTION:

ELECTRICAL DETAILS

SHEET #:

E-3.0

Docusign Envelope ID: 1C4F2B64-D77B-41F4-BC3F-6BCF8F1E1FE7

DETAIL NOT USED | 1

NOTE:

1. WIDTH OF TRENCH WILL BE DETERMINED BY THE SIZE OF CONDUITS, NUMBER OF CONDUITS, AND CONFIGURATION.

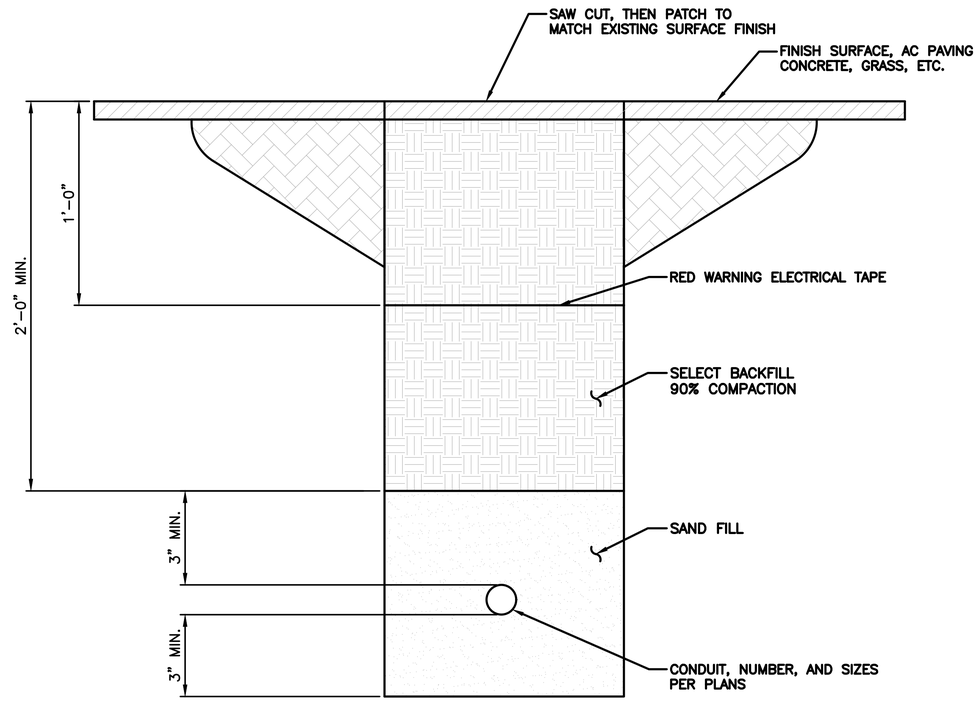

CONDUIT TRENCH DETAIL | 2

STAMP:

11/18/2024
STATE OF NEW HAMPSHIRE
SHELTON DOUGLAS KEISLING No. 18260
LICENSED PROFESSIONAL ENGINEER
EF94D8A5B80B407...

ENGINEERING LICENSE:

STATE OF NEW HAMPSHIRE

PE CERTIFICATE OF AUTHORIZATION # 01191

ENGINEER:		PE#:	DISCIPLINE:	
SDK	SHELTON D. KEISLING	18260	ELECTRICAL	E
TMS	TERRANCE M. SUPER	10926	ELECTRICAL	E

PLANS PREPARED FOR:

PLANS PREPARED BY:

DRAWING NOTICE:

THIS DRAWING HAS NOT BEEN PUBLISHED AND IS THE SOLE PROPERTY OF SSC, INC. AND IS LENT TO THE BORROWER FOR THEIR CONFIDENTIAL USE ONLY, AND IN CONSIDERATION OF THE LOAN OF THIS DRAWING, THE BORROWER PROMISES AND AGREES TO RETURN IT UPON REQUEST AND AGREES THAT IT WILL NOT BE REPRODUCED, COPIED, LENT OR OTHERWISE DISPOSED OF DIRECTLY OR INDIRECTLY, NOR USED FOR ANY PURPOSE OTHER THAN FOR WHICH IT IS FURNISHED.

SUBMITTALS:

DESCRIPTION	DATE	BY	REV
ISSUED FOR REVIEW	09/20/24	IBA	A
ISSUED FOR PERMITTING	09/25/24	IBA	0
REVISED PER AHJ COMMENTS	11/15/24	IBA	1

APPLICANT SITE NAME:

WHOLE FOOD (PORTSMOUTH)

APPLICANT SITE NUMBER:

AGI-INA-NH-0001

SITE ADDRESS:

1600 WOODBURY AVE
PORTSMOUTH, NH 03801

SHEET DESCRIPTION:

ELECTRICAL DETAILS (2 OF 2)

SHEET #:

E-3.1

Docusign Envelope ID: 1C4F2B64-D77B-41F4-BC3F-6BCF8F1E1FE7

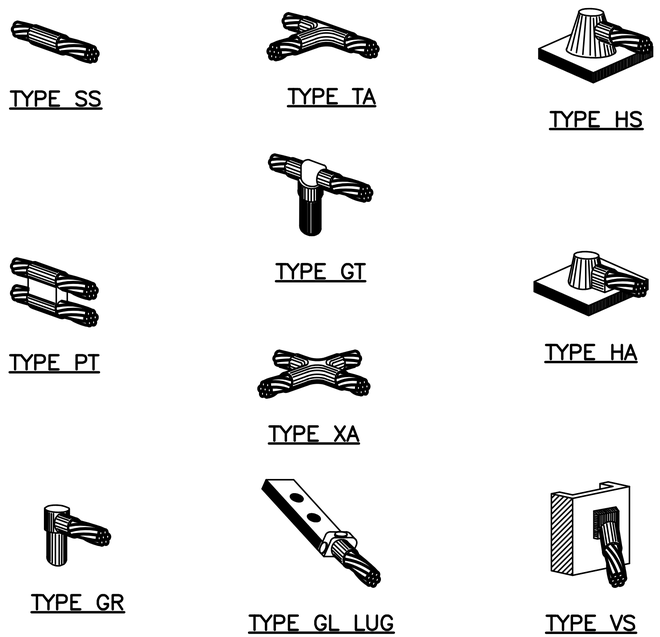

EXOTHERMIC CONNECTION DETAILS | 1

LEGEND:

- ● EXOTHERMIC CONNECTION
- ▲ MECHANICAL CONNECTION

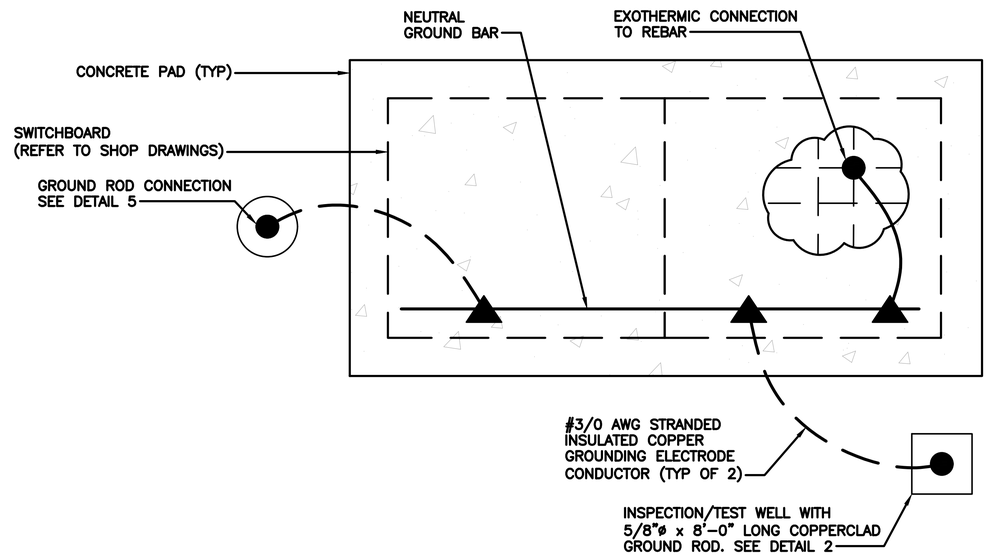

TYPICAL SWITCHBOARD FOUNDATION GROUNDING PLAN | 2

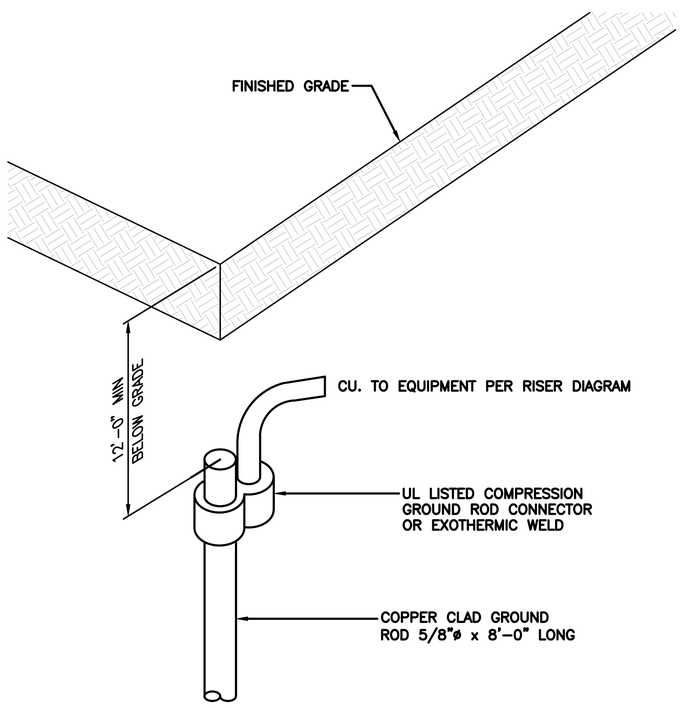

GROUND ROD DETAIL | 5

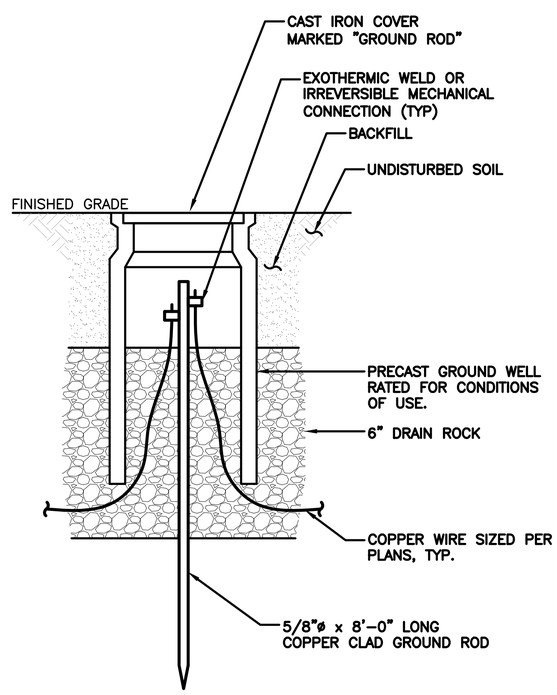

INSPECTION/TEST WELL DETAIL | 4

DETAIL NOT USED | 3

STAMP:

10/18/2024
STATE OF NEW HAMPSHIRE
SHELTON DOUGLAS KEISLING No. 18260
LICENSED PROFESSIONAL ENGINEER
EF94D8A5B80B407...

ENGINEERING LICENSE:
STATE OF NEW HAMPSHIRE
PE CERTIFICATE OF AUTHORIZATION # 01191

ENGINEER:		PE#:	DISCIPLINE:	
SDK	SHELTON D. KEISLING	18260	ELECTRICAL	E
TMS	TERRANCE M. SUPER	10926	ELECTRICAL	E

PLANS PREPARED FOR:

PLANS PREPARED BY:

DRAWING NOTICE:
THIS DRAWING HAS NOT BEEN PUBLISHED AND IS THE SOLE PROPERTY OF SSC, INC. AND IS LENT TO THE BORROWER FOR THEIR CONFIDENTIAL USE ONLY, AND IN CONSIDERATION OF THE LOAN OF THIS DRAWING, THE BORROWER PROMISES AND AGREES TO RETURN IT UPON REQUEST AND AGREES THAT IT WILL NOT BE REPRODUCED, COPIED, LENT OR OTHERWISE DISPOSED OF DIRECTLY OR INDIRECTLY, NOR USED FOR ANY PURPOSE OTHER THAN FOR WHICH IT IS FURNISHED.

SUBMITTALS:

DESCRIPTION	DATE	BY	REV
ISSUED FOR REVIEW	09/20/24	IBA	A
ISSUED FOR PERMITTING	09/25/24	IBA	0
REVISED PER AHJ COMMENTS	11/15/24	IBA	1

APPLICANT SITE NAME:
WHOLE FOOD (PORTSMOUTH)

APPLICANT SITE NUMBER:
AGI-INA-NH-0001

SITE ADDRESS:
1600 WOODBURY AVE
PORTSMOUTH, NH 03801

SHEET DESCRIPTION:
GROUNDING DETAILS

SHEET #:
G-1.0

Docusign Envelope ID: 1C4F2B64-D77B-41F4-BC3F-6BCF8F1E1FE7

GENERAL REQUIREMENTS

PART 1: GENERAL

1.1 INTENT:

A. THESE SPECIFICATIONS AND CONSTRUCTION DRAWINGS DESCRIBE THE WORK TO BE DONE AND THE MATERIALS TO BE FURNISHED FOR CONSTRUCTION. PLANS ARE NOT TO BE SCALED.
B. THE DRAWINGS AND SPECIFICATIONS ARE INTENDED TO BE FULLY EXPLANATORY AND SUPPLEMENTARY, HOWEVER, SHOULD ANYTHING BE SHOWN, INDICATED OR SPECIFIED ON ONE AND NOT THE OTHER, IT SHALL BE DONE THE SAME AS IF SHOWN, INDICATED OR SPECIFIED IN BOTH.
C. THE INTENTION OF DOCUMENTS IS TO INCLUDE ALL LABOR AND MATERIALS REASONABLY NECESSARY FOR THE PROPER EXECUTION AND COMPLETION OF THE WORK AS STIPULATED IN THE CONTRACT.
D. CONFLICTS: THE CONTRACTOR SHALL BE RESPONSIBLE FOR VERIFICATION OF ALL MEASUREMENTS AT THE SITE BEFORE ORDERING MATERIALS OR DOING ANY WORK. NO COMPENSATION SHALL BE ALLOWED DUE TO DIFFERENCES BETWEEN ACTUAL DIMENSIONS AND THOSE ON THE DOCUMENTS. ANY DISCREPANCY SHALL BE REPORTED TO THE OWNER OR THEIR AGENT FOR CONSIDERATION.

1.2 LICENSING REQUIREMENTS:

A. THE CONTRACTOR IS RESPONSIBLE FOR PROCUREMENT AND MAINTAINING ALL APPLICABLE LICENSES AND BONDS.

1.3 STORAGE:

A. ALL MATERIALS MUST BE STORED IN A LEVEL AND DRY FASHION THAT DOES NOT OBSTRUCT THE FLOW OF OTHER WORK. ANY STORAGE METHOD MUST MEET ALL RECOMMENDATIONS OF THE ASSOCIATED MANUFACTURER.

1.4 CLEAN UP:

A. THE CONTRACTOR SHALL KEEP THE SITE FREE FROM ACCUMULATION OF WASTE MATERIALS OR RUBBISH AT ALL TIMES.

1.5 QUALITY ASSURANCE:

A. ALL WORK SHALL BE IN ACCORDANCE WITH APPLICABLE LOCAL, STATE, AND FEDERAL REGULATIONS.

PART 2: PRODUCTS – NOT APPLICABLE TO THIS SECTION

PART 3: EXECUTION – NOT APPLICABLE TO THIS SECTION

END OF SECTION

SITE CLEARING/EROSION CONTROL

PART 1: GENERAL

1.1 SUMMARY:

A. PROVIDE SITE–CLEARING AS REQUIRED TO COMPLETE WORK AS SHOWN ON CONTRACT DOCUMENTS INCLUDING CLEARING, GRUBBING, STRIPPING, EROSION AND SILTATION CONTROL, AND PROTECTION OF LANDSCAPE MATERIALS DESIGNATED TO BE PROTECTED DURING CONSTRUCTION.

1.2 QUALITY ASSURANCE:

A. COMPLY WITH GOVERNING CODES AND REGULATIONS.

B. SITE PROTECTION: PROVIDE ALL NECESSARY JOB SITE MAINTENANCE FROM COMMENCEMENT OF WORK UNTIL COMPLETION OF THE SUBCONTRACT

C. AVOID DAMAGE TO THE SITE AND TO EXISTING FACILITIES, STRUCTURES, TREES, AND SHRUBS DESIGNATED TO REMAIN. TAKE PROTECTIVE MEASURES TO PREVENT EXISTING FACILITIES THAT ARE NOT DESIGNATED FOR REMOVAL FROM BEING DAMAGED BY THE WORK.

D. ANY AND ALL WASTE MATERIALS (E.G., CONCRETE WASTE) AND SOIL ARE PROHIBITED FROM BEING DISCHARGED OFF OF THE WORK SITE AND/OR ENTERING STORM DRAINS.

PART 2: PRODUCTS

2.1 MATERIALS:

A. TREE PROTECTION, EROSION CONTROL, SILTATION CONTROL, AND DUST CONTROL MATERIALS SUITABLE FOR SITE CONDITIONS.

PART 3: EXECUTION

3.1 SITE CLEARING OPERATIONS:

A. PROTECTION OF EXISTING TREES, VEGETATION, LANDSCAPING, AND SITE IMPROVEMENTS NOT SCHEDULED FOR CLEARING WHICH MIGHT BE DAMAGED BY CONSTRUCTION ACTIVITIES.

B. TRIMMING OF EXISTING TREES AND VEGETATION AS RECOMMENDED BY ARBORIST FOR PROTECTION DURING CONSTRUCTION ACTIVITIES.

C. CLEARING AND GRUBBING OF STUMPS AND VEGETATION, AND REMOVAL AND DISPOSAL OF DEBRIS, RUBBISH, DESIGNATED TREES, AND SITE IMPROVEMENTS.

D. TOPSOIL STRIPPING AND STOCKPILING.

E. TEMPORARY EROSION CONTROL, SILTATION CONTROL, AND DUST CONTROL.

F. TEMPORARY PROTECTION OF ADJACENT PROPERTY, STRUCTURES, BENCHMARKS, AND MONUMENTS.

G. WATERING OF TREES AND VEGETATION DURING CONSTRUCTION ACTIVITIES.

H. REMOVAL AND LEGAL DISPOSAL OF CLEARED MATERIALS.

I. MAINTAIN ALL EXISTING FENCING AND GATES TO MAINTAIN A SECURE SITE AT ALL TIMES.

J. PROVIDE AND MAINTAIN ALL TEMPORARY FENCING, BARRICADES, WARNING SIGNALS AND SIMILAR DEVICES NECESSARY TO PROTECT LIFE AND PROPERTY DURING THE ENTIRE PERIOD OF CONSTRUCTION. REMOVE ALL SUCH DEVICES UPON COMPLETION OF THE WORK.

3.2 CLEARING:

A. PREVENT DAMAGE TO EXISTING IMPROVEMENTS INDICATED TO REMAIN, INCLUDING ON AND OFF SITE. PROTECT EXISTING TREES AND VEGETATION INDICATED TO REMAIN. DO NOT STOCKPILE MATERIALS AND RESTRICT TRAFFIC WITHIN DRIP LINE OF EXISTING TREES TO REMAIN OR THAT INTERFERE WITH ACCESS TO SITE. PROVIDE AND MAINTAIN TEMPORARY GUARDS TO ENCIRCLE TREES OR GROUPS OF TREES TO REMAIN; OBTAIN APPROVAL BEFORE BEGINNING WORK.

B. WATER VEGETATION AS REQUIRED TO MAINTAIN HEALTH. COVER TEMPORARILY EXPOSED ROOTS WITH WET BURLAP AND BACKFILL AS SOON AS POSSIBLE. COAT CUT PLANT SURFACES WITH APPROVED EMULSIFIED ASPHALT PLANT COATING.

C. REPAIR OR REPLACE VEGETATION DESIGNATED FOR REUSE, WHICH HAS BEEN DAMAGED. REMOVE HEAVY GROWTHS OF GRASS BEFORE STRIPPING. STOCKPILE SATISFACTORY TOPSOIL CONTAINING NO LARGE STONES, FOREIGN MATTER AND WEEDS ON SITE FOR REUSE.

D. COMPLETELY REMOVE ALL IMPROVEMENTS, STUMPS AND DEBRIS EXCEPT FOR THOSE INDICATED TO REMAIN. REMOVE BELOW GRADE IMPROVEMENTS AT LEAST 12" BELOW FINISH GRADE SO AS NOT TO INTERFERE WITH NEW CONSTRUCTION. REMOVE ABANDONED MECHANICAL AND ELECTRICAL WORK AS REQUIRED.

E. PREVENT EROSION AND SILTATION OF STREETS, CATCH BASINS AND PIPING. CONTROL WINDBLOWN DUST. REMOVE WASTE MATERIALS AND UNSUITABLE SOIL FROM SITE AND DISPOSE OF IN A LEGAL MANNER. ALL MATERIAL SHALL BE CONTAINED BY APPROPRIATE CONTROLS.

F. EXCEPT WHERE EXCAVATION TO GREATER DEPTH IS INDICATED, FILL DEPRESSIONS RESULTING FROM CLEARING, GRUBBING AND DEMOLITION WORK COMPLETELY WITH SUITABLE FILL AND COMPACT AS REQUIRED.

3.3 EROSION CONTROL:

A. PROVIDE EROSION AND SILTATION CONTROL AS REQUIRED TO MEET ALL LOCAL AND STATE REQUIREMENTS.

END OF SECTION

STAMP:

STATE OF NEW HAMPSHIRE
SHELTON DOUGLAS KEISLING
No. 18260
LICENSED
PROFESSIONAL ENGINEER
11/18/2024
EF94D8A5B80B407...

ENGINEERING LICENSE:
STATE OF NEW HAMPSHIRE
PE CERTIFICATE OF AUTHORIZATION # 01191

ENGINEER:		PE#:	DISCIPLINE:	
SDK	SHELTON D. KEISLING	18260	ELECTRICAL	E
TMS	TERRANCE M. SUPER	10926	ELECTRICAL	E

PLANS PREPARED FOR:

PLANS PREPARED BY:

DRAWING NOTICE:
THIS DRAWING HAS NOT BEEN PUBLISHED AND IS THE SOLE PROPERTY OF SSC, INC. AND IS LENT TO THE BORROWER FOR THEIR CONFIDENTIAL USE ONLY, AND IN CONSIDERATION OF THE LOAN OF THIS DRAWING, THE BORROWER PROMISES AND AGREES TO RETURN IT UPON REQUEST AND AGREES THAT IT WILL NOT BE REPRODUCED, COPIED, LENT OR OTHERWISE DISPOSED OF DIRECTLY OR INDIRECTLY, NOR USED FOR ANY PURPOSE OTHER THAN FOR WHICH IT IS FURNISHED.

SUBMITTALS:

DESCRIPTION	DATE	BY	REV
ISSUED FOR REVIEW	09/20/24	IBA	A
ISSUED FOR PERMITTING	09/25/24	IBA	0
REVISED PER AHJ COMMENTS	11/15/24	IBA	1

APPLICANT SITE NAME:
WHOLE FOOD (PORTSMOUTH)

APPLICANT SITE NUMBER:
AGI-INA-NH-0001

SITE ADDRESS:
1600 WOODBURY AVE
PORTSMOUTH, NH 03801

SHEET DESCRIPTION:
SPECIFICATIONS
(1 OF 5)

SHEET #:
SP-1.0

Docusign Envelope ID: 1C4F2B64-D77B-41F4-BC3F-6BCF8F1E1FE7

CAST-IN-PLACE-CONCRETE

PART 1: GENERAL

1.1 SUMMARY:

A. FURNISH AND INSTALL ALL CAST-IN-PLACE CONCRETE, REINFORCING AND ACCESSORIES, AS SPECIFIED HEREIN AND AS SHOWN ON THE DRAWINGS.

1.2 SUBMITTALS:

A. PRODUCT DATA: SUBMIT MANUFACTURER'S PRODUCT DATA AND INSTALLATION INSTRUCTIONS FOR EACH MATERIAL AND PRODUCT USED.

B. SHOP DRAWINGS: SUBMIT SHOP DRAWINGS INDICATING MATERIAL CHARACTERISTICS, DETAILS OF CONSTRUCTION, CONNECTIONS, AND RELATIONSHIP WITH ADJACENT CONSTRUCTION.

1. SHOP DRAWINGS SHALL BE PREPARED AND STAMPED BY A QUALIFIED ENGINEER LICENSED IN THE JURISDICTION OF THE PROJECT.

C. MIX DESIGN: SUBMIT FOR APPROVAL MIX DESIGN PROPOSED FOR USE.

1.3 QUALITY ASSURANCE:

A. COMPLY WITH GOVERNING CODES AND REGULATIONS. PROVIDE PRODUCTS OF ACCEPTABLE MANUFACTURERS, WHICH HAVE BEEN IN SATISFACTORY USE IN SIMILAR SERVICE FOR A MINIMUM OF THREE YEARS. USE EXPERIENCED INSTALLERS. DELIVER, HANDLE, STORE MATERIALS IN ACCORDANCE WITH MANUFACTURER'S INSTRUCTIONS.

B. TESTING: EMPLOY AN INDEPENDENT TESTING AGENCY ACCEPTABLE TO OWNER TO DESIGN CONCRETE MIXES AND TO PERFORM MATERIAL EVALUATION TESTS. PROVIDE 4 AND 28 DAY CYLINDER TESTS. COMPLY WITH ASTM C 143, C 173, C 31 AND C 39.

C. STANDARDS

1. ACI 301, SPECIFICATIONS FOR STRUCTURAL CONCRETE FOR BUILDINGS.

2. ACI 318, BUILDING CODE REQUIREMENTS FOR REINFORCED CONCRETE, AND CRSI MANUAL OF STANDARD PRACTICE.

PART 2: PRODUCTS

2.1 MATERIALS:

A. MATERIALS SHALL CONFORM TO THE RESPECTIVE PUBLICATIONS AND OTHER REQUIREMENTS SPECIFIED HEREIN.

B. CEMENT: CEMENT SHALL CONFORM TO ASTM C150, TYPE 1. CEMENT MAY BE BAGGED OR BULK. CEMENT SHALL BE USED FROM ONLY ONE MILL THROUGHOUT PROJECT.

C. FINE AGGREGATE: FINE AGGREGATE SHALL CONFORM TO ASTM C33-08 AND SHALL BE UNIFORMLY GRADED, CLEAN, SHARP, WASHED MATERIAL OR CRUSHED SAND, FREE FROM ORGANIC IMPURITIES.

D. COURSE AGGREGATE: COURSE AGGREGATE SHALL CONFORM TO ASTM C33-08 AND SHALL BE NATURAL WASHED GRAVEL OR WASHED CRUSHED ROCK HAVING HARD, STRONG, DURABLE PIECES, FREE FORM ADHERENT COATINGS, THE MAXIMUM SIZE OF COARSE AGGREGATE SHALL BE 3/4" IN ACCORDANCE WITH THE REQUIREMENTS OF ASTM C33-08; GRADATION SIZE NO. 67.

E. WATER: WATER USED IN THE CONCRETE MIX SHALL BE POTABLE, CLEAN, AND FREE FROM OILS, ACIDS, SALTS, CHLORIDES, ALKALI, SUGAR, VEGETABLE, OR OTHER INJURIOUS SUBSTANCES.

F. REINFORCING STEEL: ALL BARS ARE TO BE NEW BILLET STEEL CONFORMING TO ASTM A615, GRADE 60. BENDING DETAILS ARE TO CONFORM TO THE STANDARDS OF ACI 318.

G. FORMS: THE FORMS SHALL BE TRUE AND RIGID AND CONFORM TO SHAPE, LINE AND DIMENSIONS AS SHOWN ON THE DRAWINGS. ALL FORMS SHALL BE RIGIDLY CONSTRUCTED, BRACED AND TIED TO PREVENT ANY DEFLECTION OR DISPLACEMENT DURING PLACING OF CONCRETE. ALL EXPOSED CORNERS AND EDGES SHALL HAVE 3/4" FILLETS. ALL JOINTS SHALL BE MORTAR TIGHT; OPEN JOINTS SHALL BE SEALED AS REQUIRED.

H. CONCRETE:

1. PROPORTIONING: CONCRETE SHALL CONFORM TO THE FOLLOWING:

a. CEMENT-6 SACKS PER CUBIC YARD, MINIMUM

b. WATER SHALL BE KEPT TO AN ABSOLUTE MINIMUM TO MAINTAIN SLUMP AS SPECIFIED

c. AGGREGATE; SAND FACTOR SHALL BE AS REQUIRED TO GIVE THE BEST WORKABLE MIX WITHIN THE RANGE OF 46% TO 52% OF TOTAL AGGREGATE.

d. STRENGTH-4,000 PSI AT 28 DAYS, UNLESS NOTED OTHERWISE

e. ALL CONCRETE SHALL CONTAIN A WATER-REDUCING AGENT AND SHALL HAVE THREE (3) TO FIVE (5) PERCENT ENTRAINED AIR.

2.2 SLUMP:

A. THE MAXIMUM SLUMP SHALL NOT EXCEED 3" EXCEPT FOR CONCRETE TO BE PLACED IN FORMS 8" WIDE OR LESS, WHERE THE MAXIMUM SLUMP SHALL BE 4".

B. THE DETERMINATION OF SLUMP SHALL CONFORM TO ASTM C143.

2.3 MIXING:

A. THE CONTRACTOR SHALL USE READY-MIXED CONCRETE, MIXED AND DELIVERED IN CONFORMANCE WITH ASTM C94.

2.4 MIXTURES:

A. THE CONCRETE SHALL CONTAIN AN AIR-ENTRAINING ADMIXTURE COMPLYING WITH THE REQUIREMENTS OF ASTM C-260 AND ACI 212.1R AND A WATER-REDUCING ADMIXTURE COMPLYING WITH THE REQUIREMENTS OF ASTM C-494 AND ACI 212.1R. ADMIXTURES SHALL BE PURCHASE AND BATCHED IN LIQUID SOLUTION. THE USE OF CALCIUM CHLORIDE OR AN ADMIXTURE CONTAINING CALCIUM CHLORIDE IS PROHIBITED.

B. ADMIXTURES SHALL BE OF THE SAME MANUFACTURER TO ASSURE COMPATIBILITY.

C. ACCEPTABLE MANUFACTURERS ARE:

1. W.R. GRACE 3. MASTER BUILDERS

2. SIKA GROUP 4. EUCLID CHEMICAL CO

2.5 CURING COMPOUNDS:

A. CURING COMPOUNDS SHALL CONFORM TO ASTM C309, TYPE 1, ID, CLASS A AND B AND ASTM C171 AS APPLICABLE

PART 3: EXECUTION

3.1 GENERAL:

A. CONSTRUCT AND ERECT FORMWORK IN ACCORDANCE WITH ACI 301 ACI 347.

B. COLD-WEATHER CONCRETING SHALL BE IN ACCORDANCE WITH ACI 306.

C. HOT-WEATHER CONCRETING SHALL BE IN ACCORDANCE WITH ACI 305.

3.2 INSERTS, EMBEDDED COMPONENTS AND OPENINGS:

A. CONTRACTOR SHALL CHECK ALL CIVIL, ARCHITECTURAL, STRUCTURAL, AND ELECTRICAL DRAWINGS FOR OPENINGS, SLEEVES, ANCHOR BOLTS, INSERTS AND OTHER ITEMS TO BE BUILT INTO THE CONCRETE WORK.

B. COORDINATE THE WORK OF OTHER SECTIONS IN FORMING AND SETTING OPENINGS, RECESSES, SLOTS, CHASES, ANCHORS, INSERTS AND OTHER ITEMS TO BE EMBEDDED.

C. EMBEDDED ITEMS SHALL BE SET ACCURATELY IN LOCATION, ALIGNMENT, ELEVATION, AND PLUMBNESS. LOCATE AND MEASURE FROM ESTABLISHED SURVEYED REFERENCE BENCHMARKS.

D. EMBEDDED ITEMS SHALL BE ANCHORED INTO PLACE AS REQUIRED TO PREVENT MOVEMENT DURING CONCRETE PLACEMENT AND CONSOLIDATION. COMPONENTS FORMING A PART OF A COMPLETE ASSEMBLY SHALL BE ALIGNED BEFORE ANCHORING. PROVIDE TEMPORARY BRACING, ANCHORAGE, AND TEMPLATES AS REQUIRED TO MAINTAIN THE SETTING AND ALIGNMENT.

3.3 REINFORCEMENT PLACEMENT:

A. REINFORCEMENT SHALL BE PLACED IN ACCORDANCE WITH CHECKED AND RELEASED DRAWINGS AND ACI 301 AND ACI 315; SECURELY WIRE-TIE REINFORCEMENT AT ALL INTERSECTIONS.

B. ACCURATELY POSITION, SUPPORT AND SECURE REINFORCEMENT AGAINST DISPLACEMENT FROM FORMWORK CONSTRUCTION OR CONCRETE PLACEMENT AND CONSOLIDATION. REINFORCING SHALL BE SUPPORTED ON METAL CHAIRS, RUNNERS, BOLSTERS, SPACERS, AND HANGERS.

C. SPLICES OF REINFORCING BARS SHALL BE CLASS B UNLESS SHOWN OTHERWISE. SPLICES SHALL BE STAGGERED. FULL DEVELOPMENT LENGTH SHALL BE PROVIDED ACROSS JOINTS.

D. LOCATE REINFORCING TO PROVIDE CONCRETE COVER AND SPACING SHOWN ON THE DRAWINGS. MINIMUM COVER SHALL BE AS REQUIRED BY ACI 318.

E. WELDING OF AND TO ANY REINFORCING MATERIALS INCLUDING TACK WELDING OF CROSSING BARS IS STRICTLY PROHIBITED. BARS SHALL BE FREE OF FLAKY OR SCALY RUST AT THE TIME THE CONCRETE IS PLACED.

3.4 CONCRETE PLACEMENT:

A. PRIOR TO PLACING CONCRETE, FORMS AND REINFORCEMENT SHALL BE THOROUGHLY INSPECTED. ALL WOOD CHIPS, DIRT, ETC., AS WELL AS ALL TEMPORARY BRACING, TIES, AND CLEATS REMOVED, AND ALL OPENINGS FOR UTILITIES PROPERLY BOXED, ALL FORMS SHALL BE PROPERLY SECURED IN THEIR CORRECT POSITION AND MADE TIGHT. ALL REINFORCING AND EMBEDDED ITEMS SHALL BE SECURED IN THEIR PROPER LOCATIONS.. ALL OLD AND DRY CONCRETE AND DIRT SHALL BE CLEANED AND ALL STANDING WATER AND OTHER FOREIGN MATTER REMOVED.

B. PLACING CONCRETE SHALL BE IN ACCORDANCE WITH ACI 301 AND ACI 304 AND SHALL BE CARRIED OUT AT SUCH A RATE THAT THE CONCRETE PREVIOUSLY PLACED IS STILL PLASTIC AND INTEGRATED WITH THE FRESHLY PLACE CONCRETE. CONCRETING, ONCE STARTED, SHALL BE CARRIED ON AS A CONTINUOUS OPERATION UNTIL THE SECTION IS COMPLETED. NO COLD JOINTS SHALL BE ALLOWED.

C. CONSTRUCTION JOINTS: USE KEYWAYS, CONTINUE REINFORCEMENT THROUGH JOINT.

D. EXPANSION JOINTS: FOR EXTERIOR WORK, LOCATE AT 30'-0" O.C. MAXIMUM, AT APPROVED LOCATIONS. PROVIDE SMOOTH DOWELS ACROSS JOINT WHICH PERMIT 1" HORIZONTAL MOVEMENT AND NO VERTICAL SHEAR MOVEMENT.

E. ISOLATION JOINTS: PROVIDE BETWEEN SLABS AND VERTICAL ELEMENTS SUCH AS COLUMNS AND STRUCTURAL WALLS.

F. CONTROL JOINTS: PROVIDE SAWN OR TOOLED JOINTS OR REMOVABLE INSERT STRIPS; DEPTH EQUAL TO 1/4" SLAB THICKNESS. SPACING SHALL BE AS REQUIRED AND APPROVED.

G. ALL CONCRETE SHALL BE THOROUGHLY CONSOLIDATED AND COMPACTED BY VIBRATION, SPADING, RODDING, OR FORKING DURING THE OPERATION OF PLACING AND DEPOSITING IN ACCORDANCE WITH ACI 309. THE CONCRETE SHALL BE WORKED AROUND REINFORCEMENT, EMBEDDED ITEMS, AND INTO THE CORNERS OF THE FORMS SO AS TO ELIMINATE ALL AIR AND STONE POCKETS.

3.5 FINISHING:

A. FINISHING OF ALL SLABS SHALL BE IN ACCORDANCE WITH ACI 302.1; SECTION 7.2 WITH A MINIMUM OF THREE TROWELINGS.

1. INTERIOR SLAB FINISH TOLERANCE AS MEASURED IN ACCORDANCE WITH ASTM E 1155, SHALL HAVE AN OVERALL TEST F NUMBER FOR FLATNESS, FF=20 AND FOR LEVEL, FL=15. THE MINIMUM LOCAL NUMBER FOR FLATNESS, FF=15 AND FOR LEVEL, FL=10.

2. EXTERIOR SLAB FINISH SHALL BE FLAT (FF=20) AND SHALL BE SLOPED A MINIMUM OF 1/8" PER FOOT TO A MAXIMUM OF 1/4" PER FOOT TO PREVENT PONDING WATER.

B. SURFACES OF SLABS SHALL RECEIVE TWO COATS OF CLEAR SEALER/HARDENER.

C. ABOVE GRADE WALL SURFACES SHALL HAVE A SMOOTH FORM FINISH AS DEFINED IN CHAPTER 10 OF ACI 301.

3.6 CURING:

A. FRESHLY DEPOSITED CONCRETE SHALL BE PROTECTED FROM PREMATURE DRYING AND EXCESSIVELY HOT OR COLD TEMPERATURES AND SHALL BE MAINTAINED WITH MINIMAL MOISTURE LOSS AT A RELATIVELY CONSTANT TEMPERATURE FOR A PERIOD OF TIME NECESSARY FOR THE HYDRATION OF THE CEMENT AND PROPER HARDENING OF THE CONCRETE.

B. CURING SHALL IMMEDIATELY FOLLOW THE FINISH OPERATION. CONCRETE SHALL BE KEPT CONTINUOUSLY MOIST AT LEAST OVERNIGHT, IMMEDIATELY FOLLOWING THE INITIAL CURING. BEFORE THE CONCRETE HAS DRIED, ADDITIONAL CURING SHALL BE ACCOMPLISHED BY ONE OF THE FOLLOWING MATERIALS OR METHODS:

1. PONDING OR CONTINUOUS SPRINKLING

2. ABSORPTIVE MAT OR FABRIC KEPT CONTINUOUSLY WET

3. NON-ABSORPTIVE FILM (POLYETHYLENE) OVER A PREVIOUSLY SPRINKLED SURFACE

4. SAND OR OTHER COVERING KEPT CONTINUOUSLY WET

5. CONTINUOUS STEAM (NOT EXCEEDING 150 DEGREES F) OR VAPOR MIST BATH.

6. SPRAYED-ON CURING COMPOUND APPLIED IN TWO COATES, SPRAYED IN PERPENDICULAR DIRECTIONS.

C. THE FINAL CURING SHALL CONTINUE UNTIL THE CUMULATIVE NUMBER OF DAYS OR FRACTION THEREOF, NOT NECESSARILY CONSECUTIVE, DURING WHICH TEMPERATURE OF THE AIR IN CONTACT WITH CONCRETE IS ABOVE 50 DEGREES F HAS TOTALED SEVEN (7) DAYS. CONCRETE SHALL NOT BE PERMITTED TO FREEZE DURING THE CURING PERIOD. RAPID DRYING AT THE END OF THE CURING PERIOD SHALL BE PREVENTED.

END OF SECTION

STAMP:

STATE OF NEW HAMPSHIRE
SHELTON DOUGLAS KEISLING
No. 18260
LICENSED
PROFESSIONAL ENGINEER
11/18/2024
EF94D8A5B80B407...

ENGINEERING LICENSE:
STATE OF NEW HAMPSHIRE
PE CERTIFICATE OF AUTHORIZATION # 01191

ENGINEER:		PE#:	DISCIPLINE:	
SDK	SHELTON D. KEISLING	18260	ELECTRICAL	E
TMS	TERRANCE M. SUPER	10926	ELECTRICAL	E

iONNA™

PLANS PREPARED FOR:
AGI

PLANS PREPARED BY:
SSC

DRAWING NOTICE:
THIS DRAWING HAS NOT BEEN PUBLISHED AND IS THE SOLE PROPERTY OF SSC, INC. AND IS LENT TO THE BORROWER FOR THEIR CONFIDENTIAL USE ONLY, AND IN CONSIDERATION OF THE LOAN OF THIS DRAWING, THE BORROWER PROMISES AND AGREES TO RETURN IT UPON REQUEST AND AGREES THAT IT WILL NOT BE REPRODUCED, COPIED, LENT OR OTHERWISE DISPOSED OF DIRECTLY OR INDIRECTLY, NOR USED FOR ANY PURPOSE OTHER THAN FOR WHICH IT IS FURNISHED.

SUBMITTALS:

DESCRIPTION	DATE	BY	REV
ISSUED FOR REVIEW	09/20/24	IBA	A
ISSUED FOR PERMITTING	09/25/24	IBA	0
REVISED PER AHJ COMMENTS	11/15/24	IBA	1

APPLICANT SITE NAME:
WHOLE FOOD (PORTSMOUTH)

APPLICANT SITE NUMBER:
AGI-INA-NH-0001

SITE ADDRESS:
1600 WOODBURY AVE
PORTSMOUTH, NH 03801

SHEET DESCRIPTION:
SPECIFICATIONS
(2 OF 5)

SHEET #:
SP-1.1

Docusign Envelope ID: 1C4F2B64-D77B-41F4-BC3F-6BCF8F1E1FE7

EARTH MOVING/EXCAVATION/BACKFILLING SECTION

PART 1: GENERAL

1.1 SUMMARY:

A. PROVIDE EARTHWORK OPERATIONS INCLUDING BUT NOT LIMITED TO EXCAVATION, GRADING, TRENCHING AND COMPACTION.

1.2 QUALITY ASSURANCE COMPACTION:

A. UNDER STRUCTURES, BUILDING SLABS, STEPS, PAVEMENTS, AND WALKWAYS, 95% MAXIMUM DENSITY, ASTM D 1557.

1. GRADING TOLERANCES:

a. LAWNS, UNPAVED AREAS, AND WALKS, PLUS OR MINUS 1".

b. KEEP SITE FREE FROM ANY PONDING WATER

c. GRADING TOLERANCE FOR FILL UNDER BUILDING OR EQUIPMENT SLABS: PLUS OR MINUS 1/4" MEASURED WITH 10'-0" STRAIGHTEDGE.

2. TESTING: FIELD TESTING OF EARTHWORK AND COMPACTION SHALL BE PERFORMED BY OWNER'S INDEPENDENT TESTING LAB. THIS WORK IS TO BE COORDINATED BY THE CONTRACTOR.

3. ALL WORK SHALL BE INSPECTED AND RELEASED BY THE OWNER OR HIS AGENT WHO SHALL CARRY OUT THE GENERAL INSPECTION OF THE WORK AS SPECIFIED AND/OR CALLED OUT BY THE CONSTRUCTION DOCUMENTS. PROVIDE A MINIMUM OF 48 HOURS NOTICE PRIOR TO ANY PLACEMENT OF CONCRETE OR BACKFILLING OF TRENCHES. IT IS THE CONTRACTOR'S RESPONSIBILITY TO REQUEST TIMELY INSPECTIONS PRIOR TO PROCEEDING WITH FURTHER WORK THAT WOULD MAKE PARTS OF WORK INACCESSIBLE OR DIFFICULT TO INSPECT.

4. EXISTING UTILITIES: DO NOT INTERRUPT EXISTING UTILITIES SERVING FACILITIES OCCUPIED BY THE OWNER OR OTHERS, EXCEPT WHEN PERMITTED IN WRITING BY OWNER OR HIS AGENT AND THEN ONLY AFTER ACCEPTABLE TEMPORARY UTILITY SERVICES HAVE BEEN PROVIDED.

PART 2: PRODUCTS

2.1 GENERAL:

A. UTILITY TRENCH: PROVIDE WELL GRADED SAND (SW-SM) FROM BASE OF TRENCH TO MINIMUM ABOVE THE HIGHEST CONDUIT WITHIN TRENCH. REMAINDER OF TRENCH AREA CAN BE EITHER AB 3 OR CLEAN GRAVEL AS DESCRIBED HEREIN. COMPACT AS REQUIRED TO PREVENT SETTLING.

B. ACCESS ROADS: 6" MINIMUM (UNLESS NOTED OTHERWISE ON DRAWINGS) COMPACTED AB 3 OR APPROVED EQUAL (UNWASHED CRUSHED LIMESTONE GRAVEL CONSISTING OF MULTIPLE AGGREGATE SIZES, ROCK CHIPS, AND ROCK DUST.)

C. COMPOUND (NEW CONSTRUCTION): 2" THICK CLEAN GRAVEL, WITH 100% PASSING THROUGH A 1" SIEVE OVER 4" COMPACTED AB 3.

D. COMPOUND (EXISTING): PROVIDE CLEAN GRAVEL WITH 100% PASSING THROUGH A 1" SIEVE AS REQUIRED TO BRING COMPOUND TO PROPER GRADE OR REPAIR EXISTING DAMAGED AREAS.

E. STRUCTURAL FILL: PROVIDE 4" MINIMUM AB 3 BELOW STRUCTURES OR SLABS

2.2 MATERIALS:

A. GEOTEXTILE FABRIC: PROVIDE MIRAFI 500X OR APPROVED EQUAL.

B. PLASTIC MARKING TAPE: SHALL BE ACID AND ALKALI RESISTANT POLYETHYLENE FILM SPECIFICALLY MANUFACTURED FOR MARKING AND LOCATING UNDERGROUND UTILITIES, 6" WIDE WITH A MINIMUM THICKNESS OF 0.004". TAPE SHALL HAVE MINIMUM STRENGTH OF 1500 PSI IN BOTH DIRECTIONS AND MANUFACTURED WITH INTEGRAL WIRES OR OTHER MEANS TO ENABLE DETECTION BY A METAL DETECTOR WHEN BURIED UP TO 3'-0" DEEP. THE CORE OF THE TAPE SHALL BE ENCASED IN A PROTECTIVE JACKET OR OTHER MEANS TO PROTECT FROM CORROSION. TAPE COLOR SHALL BE RED FOR ELECTRIC UTILITIES AND ORANGE FOR TELECOMMUNICATION

PART 3: EXECUTION

3.1 INSTALLATION:

A. PRIOR TO EXCAVATING, THOROUGHLY EXAMINE AREA TO BE EXCAVATED AND/OR TRENCHED TO VERIFY THE LOCATIONS OF FEATURES ON THE DRAWINGS AND TO ASCERTAIN THE EXISTENCE OF ANY STRUCTURE NOT SHOWN THAT MIGHT INTERFERE WITH NEW CONSTRUCTION. NOTIFY THE OWNER OR HIS AGENT OF ANY OBSTRUCTIONS THAT WILL PREVENT ACCOMPLISHMENT OF THE WORK AS INDICATED ON THE DRAWINGS.

B. EXCAVATION IS UNCLASSIFIED AND INCLUDES EXCAVATION TO SUBGRADE REGARDLESS OF MATERIALS. REPAIR EXCAVATIONS BEYOND ELEVATIONS AND DIMENSIONS INDICATED AS REQUIRED.

C. MAINTAIN STABILITY OF EXCAVATIONS; COORDINATE SHORING AND BRACING AS REQUIRED BY AUTHORITIES HAVING JURISDICTION. PREVENT SURFACE AND SUBSURFACE WATER FROM ACCUMULATING IN EXCAVATIONS. STOCKPILE SATISFACTORY MATERIALS FOR REUSE, ALLOW FOR PROPER DRAINAGE.

D. COMPACT MATERIALS AT THE OPTIMUM MOISTURE CONTENT AS DETERMINED BY ASTM D 1557 BY AERATION OR WETTING TO 95% OF MAXIMUM DRY DENSITY TO SUITABLE DEPTH.

E. PLACE ACCEPTABLE MATERIALS IN LAYERS NOT MORE THAN 8" LOOSE DEPTH FOR MATERIALS COMPACTED BY HEAVY EQUIPMENT AND NOT MORE THAN 4" LOOSE DEPTH FOR MATERIALS COMPACTED BY HAND EQUIPMENT TO SUBGRADES INDICATED AS FOLLOWS:

1. STRUCTURAL FILL: USE UNDER FOUNDATIONS, SLABS ON GRADE IN LAYERS AS INDICATED.

2. DRAINAGE FILL: USE UNDER DESIGNATED BUILDING SLABS, AT FOUNDATION DRAINAGE AND ELSEWHERE AS INDICATED.

3. COMMON FILL: USE UNDER UNPAVED AREAS.

4. SUBBASE MATERIAL: USE UNDER GENERAL COMPOUND AREA. IF THICKNESS OF LIFT IS GREATER THAN 6 SPREAD AND COMPACT THE CRUSHED STONE IN MULTIPLE LIFTS OF EQUAL THICKNESS WITH A MAXIMUM LIFT OF 6"

F. GRADE TO 1/2" ABOVE OR BELOW REQUIRED SUBGRADE AND TO A TOLERANCE OF 1/4" IN 10'-0".

G. PROTECT NEWLY GRADED AREAS FROM TRAFFIC AND EROSION. RE-COMPACT AND RE-GRADE SETTLED, DISTURBED AND DAMAGED AREAS TO RESTORE QUALITY, APPEARANCE, AND CONDITION.

H. CONTROL EROSION TO PREVENT RUNOFF INTO SEWERS OR DAMAGE TO AREAS.

I. CONTROL DUST TO PREVENT HAZARDS TO ADJACENT PROPERTIES AND VEHICLES. IMMEDIATELY REPAIR OR REMEDY DAMAGE CAUSED BY DUST INCLUDING AIR FILTERS IN EQUIPMENT AND VEHICLES. CLEAN SOILED SURFACES.

J. DISPOSE OF WASTE AND UNSUITABLE MATERIALS OFF-SITE IN A LEGAL MANNER.

3.2 BACKFILL:

A. AS SOON AS PRACTICAL AFTER COMPLETING CONSTRUCTION OF THE RELATED STRUCTURE, INCLUDING THE SPECIFIED MINIMUM CURING PERIOD FOR CAST-IN-PLACE CONCRETE, BACKFILL THE EXCAVATION WITH APPROVED MATERIAL TO RESTORE THE REQUIRED FINISHED GRADE.

1. PRIOR TO PLACING BACKFILL AROUND STRUCTURES, ALL FORMS SHALL HAVE BEEN REMOVED AND THE EXCAVATION CLEANED OF ALL TRASH, DEBRIS, AND UNSUITABLE MATERIALS.

2. BACKFILL BY PLACING AND COMPACTING SUITABLE BACKFILL MATERIAL OR SELECT GRANULAR BACKFILL MATERIAL, WHEN REQUIRED IN UNIFORM HORIZONTAL LAYERS OF NO GREATER THAN 8" LOOSE THICKNESS. WHERE HAND OPERATED COMPACTORS ARE USED, THE FILL MATERIAL SHALL BE PLACED IN LIFTS NOT TO EXCEED 4" IN LOOSE DEPTH.

3. IF THE DENSITY TESTING INDICATES THAT THE SPECIFIED DENSITY, THE SUCCEEDING LAYER SHALL NOT BE PLACED UNTIL THE SPECIFICATION REQUIREMENTS ARE MET UNLESS AUTHORIZED BY THE GEO-TECHNICAL ENGINEER. THE CONTRACTOR SHALL TAKE WHATEVER APPROPRIATE ACTION IS NECESSARY TO OBTAIN PROPER COMPACTION.

B. COMPACT EACH LAYER OF BACKFILL TO A MINIMUM OF 95% OF THE MAXIMUM DRY DENSITY AS PROVIDED BY THE STANDARD PROCTOR TEST, ASTM D 698.

3.3 TRENCH EXCAVATION:

A. UTILITY TRENCHES SHALL BE EXCAVATED TO THE LINES AND GRADES SHOWN ON THE DRAWINGS OR AS DIRECTED BY THE OWNER OR HIS AGENT. PROVIDE SHORING, SHEETING AND BRACING AS REQUIRED TO PREVENT CAVING OR SLOUGHING OF THE TRENCH WALLS.

B. EXTEND THE TRENCH WIDTH A MINIMUM OF 6" BEYOND THE OUTSIDE EDGE OF THE OUTER-MOST CONDUIT.

C. WHEN SOFT, YIELDING, OR OTHERWISE UNSTABLE SOIL CONDITIONS ARE ENCOUNTERED, BACKFILL AT THE REQUIRED TRENCH TO A DEPTH OF NO LESS THAN 12" BELOW THE REQUIRED ELEVATION AND BACKFILL WITH GRANULAR BEDDING MATERIAL.

3.4 TRENCH BACKFILL:

A. PROVIDE GRANULAR BEDDING MATERIAL (WELL GRADED SAND) IN ACCORDANCE WITH THE DRAWINGS AND THE UTILITY REQUIREMENTS.

B. NOTIFY THE OWNER OR HIS AGENT 24 HOURS IN ADVANCE OF BACKFILLING.

C. CONDUCT UTILITY CHECK TESTS BEFORE BACKFILLING. BACKFILL AND COMPACT TRENCH BEFORE ACCEPTANCE TESTING.

D. PLACE GRANULAR TRENCH BACKFILL UNIFORMLY ON BOTH SIDES OF THE CONDUITS IN 6" UNCOMPACTED LIFTS UNTIL 6" OVER THE CONDUITS. SOLIDLY RAM AND TAMP BACKFILL INTO SPACES AROUND CONDUITS.

E. PROTECT CONDUIT FROM LATERAL MOVEMENT, IMPACT DAMAGE, OR UNBALANCED LOADING.

F. ABOVE THE CONDUIT EMBEDMENT ZONE, PLACE AND COMPACT BACKFILL MATERIAL IN 8" MAXIMUM LOOSE THICKNESS LIFTS TO RESTORE THE REQUIRED FINISHED SURFACE GRADE.

G. COMPACT FINAL TRENCH BACKFILL TO A DENSITY EQUAL TO OR GREATER THAN EXISTING UNDISTURBED MATERIAL ADJACENT TO THE TRENCH BUT NO LESS THAN A MINIMUM OF 95% OF THE MAXIMUM DRY DENSITY AS PROVIDED BY THE STANDARD PROCTOR TEST, ASTM D 698.

3.5 AGGREGATE ACCESS ROAD (IF APPLICABLE):

A. CLEAR, GRUB, STRIP AND EXCAVATE FOR ACCESS ROAD TO THE LINES AND GRADES INDICATED ON DRAWINGS. SCARIFY TO A DEPTH OF 6" AND PROOF-ROLL ALL HOLES, RUTS, SOFT PLACES AND OTHER DEFECTS.

B. THE ENTIRE SUBGRADE SHALL BE COMPACTED TO NOT LESS THAN 95% OF THE MAXIMUM DRY DENSITY AS PROVIDED BY THE STANDARD PROCTOR TEST, ASTM D 1557.

C. AFTER PREPARATION OF THE SUBGRADE IS COMPLETE, THE GEOTEXTILE FABRIC (MIRAFI 500X) SHALL BE INSTALLED TO THE LIMITS INDICATED ON DRAWINGS BY ROLLING THE FABRIC OUT LONGITUDINALLY ALONG ROADWAY. THE FABRIC SHALL NOT BE DRAGGED ACROSS THE SUBGRADE. PLACE THE ENTIRE ROLL IN A SINGLE OPERATION, AS SMOOTHLY AS POSSIBLE.

1. OVERLAPS PARALLEL TO THE ROADWAY WILL BE PERMITTED AT THE CENTERLINE AND AT LOCATIONS BEYOND THE ROADWAY SURFACE WIDTH. NO LONGITUDINAL OVERLAPS SHALL BE LOCATED BETWEEN THE CENTERLINE AND THE SHOULDER. PARALLEL OVERLAPS SHALL BE A MINIMUM OF 3'-0" WIDE.

2. TRANSVERSE OR PERPENDICULAR OVERLAPS AT THE END OF A ROLL SHALL OVERLAP IN THE DIRECTION OF THE AGGREGATE PLACEMENT (PREVIOUS ROLL ON TOP) AND SHALL HAVE A MINIMUM LENGTH OF 3'-0".

3. ALL OVERLAPS SHALL BE PINNED WITH STAPLES OR NAILS BETWEEN 10" AND 12" LONG TO INSURE POSITIONING DURING PLACEMENT OF AGGREGATE. PIN LONGITUDINAL SEAMS AT 25'-0" O.C. AND TRANSVERSE SEAMS EVERY 5'-0" O.C.

D. THE AGGREGATE BASE AND SURFACE COURSES SHALL BE CONSTRUCTED IN LAYERS OF AT LEAST 6" (COMPACTED) THICKNESS. AGGREGATE TO BE PLACED ON GEOTEXTILE FABRIC AND SHALL BE END-DUMPED ON THE FABRIC FROM THE FREE END OF THE FABRIC OR OVER PREVIOUSLY PLACED AGGREGATE. AT NO TIME SHALL EQUIPMENT BE PERMITTED ON THE ROADWAY WITH LESS THAN 6" OF MATERIAL COVERING THE FABRIC.

E. THE AGGREGATE SHALL BE IMMEDIATELY COMPACTED TO NOT LESS THAN 95% OF THE MAXIMUM DRY DENSITY AS PROVIDED BY THE PROCTOR TEST, ASTM D 1557 WITH A TAMPING ROLLER, A PNEUMATIC-TIRED ROLLER, OR WITH A VIBRATORY MACHINE OR ANY COMBINATION OF THE ABOVE. THE TOP LAYER SHALL BE GIVEN A FINAL ROLLING WITH A THREE-WHEEL OR TANDEM ROLLER.

3.6 FINISH GRADING:

A. PERFORM ALL GRADING TO PROVIDE SMOOTH, EVEN SURFACE DRAINAGE OF THE ENTIRE AREA WITHIN THE LIMITS OF CONSTRUCTION. GRADING SHALL BE COMPATIBLE WITH ALL SURROUNDING TOPOGRAPHY AND STRUCTURES.

B. UTILIZE SATISFACTORY FILL MATERIALS RESULTING FROM THE EXCAVATION WORK IN THE CONSTRUCTION OF FILLS, EMBANKMENTS AND FOR THE REPLACEMENT OF REMOVED UNSUITABLE MATERIALS.

C. ACHIEVE FINISHED GRADE BY PLACING A MINIMUM OF 6" OF AB 3 ON TOP OF SOIL STABILIZER FABRIC.

D. REPAIR ALL ACCESS ROADS AND SURROUNDING AREAS USED DURING THE COURSE OF THIS WORK TO THEIR ORIGINAL CONDITION.

END OF SECTION

STAMP:

11/18/2024

STATE OF NEW HAMPSHIRE
SHELTON DOUGLAS KEISLING
No. 18260
LICENSED
PROFESSIONAL ENGINEER

EF94D8A5B80B407...

ENGINEERING LICENSE:

STATE OF NEW HAMPSHIRE

PE CERTIFICATE OF AUTHORIZATION # 01191

ENGINEER:		PE#:	DISCIPLINE:	
SDK	SHELTON D. KEISLING	18260	ELECTRICAL	E
TMS	TERRANCE M. SUPER	10926	ELECTRICAL	E

iONNA™

PLANS PREPARED FOR:

AGI

PLANS PREPARED BY:

SSC

DRAWING NOTICE:

THIS DRAWING HAS NOT BEEN PUBLISHED AND IS THE SOLE PROPERTY OF SSC, INC. AND IS LENT TO THE BORROWER FOR THEIR CONFIDENTIAL USE ONLY, AND IN CONSIDERATION OF THE LOAN OF THIS DRAWING, THE BORROWER PROMISES AND AGREES TO RETURN IT UPON REQUEST AND AGREES THAT IT WILL NOT BE REPRODUCED, COPIED, LENT OR OTHERWISE DISPOSED OF DIRECTLY OR INDIRECTLY, NOR USED FOR ANY PURPOSE OTHER THAN FOR WHICH IT IS FURNISHED.

SUBMITTALS:

DESCRIPTION	DATE	BY	REV
ISSUED FOR REVIEW	09/20/24	IBA	A
ISSUED FOR PERMITTING	09/25/24	IBA	0
REVISED PER AHJ COMMENTS	11/15/24	IBA	1

APPLICANT SITE NAME:

WHOLE FOOD (PORTSMOUTH)

APPLICANT SITE NUMBER:

AGI-INA-NH-0001

SITE ADDRESS:

1600 WOODBURY AVE
PORTSMOUTH, NH 03801

SHEET DESCRIPTION:

SPECIFICATIONS
(3 OF 5)

SHEET #:

SP-1.2

Docusign Envelope ID: 1C4F2B64-D77B-41F4-BC3F-6BCF8F1E1FE7

ELECTRICAL

PART 1: GENERAL

1.1 GENERAL CONDITIONS:

A. THE CONTRACTOR SHALL INSPECT THE SITE WHERE THIS WORK IS TO BE PERFORMED AND FULLY FAMILIARIZE HIMSELF WITH ALL CONDITIONS RELATED TO THIS PROJECT.

B. THE CONTRACTOR SHALL OBTAIN AND PAY FOR ALL PERMITS AND LICENSES AND SHALL MAKE ALL DEPOSITS AND PAY ALL FEES REQUIRED FOR THE PERFORMANCE OF WORK UNDER THIS SECTION.

C. DRAWINGS SHOW THE GENERAL ARRANGEMENT OF ALL SYSTEMS AND COMPONENTS COVERED UNDER THIS SECTION. THE CONTRACTOR SHALL VERIFY ALL DIMENSIONS. DRAWINGS SHALL NOT BE SCALED TO DETERMINE DIMENSIONS.

1.2 LAWS, REGULATIONS, ORDINANCES, STATUTES AND CODES:

A. ALL WORK SHALL BE INSTALLED IN ACCORDANCE WITH THE NATIONAL ELECTRICAL CODE, AND ALL APPLICABLE LOCAL LAWS, REGULATIONS, ORDINANCES, STATUTES AND CODES.

1.3 REFERENCES:

A. THE PUBLICATIONS LISTED BELOW FORM PART OF THIS SPECIFICATION. EACH PUBLICATION SHALL BE THE LATEST REVISION AND ADDENDUM IN EFFECT ON THE DATE THIS SPECIFICATION IS ISSUED FOR CONSTRUCTION UNLESS NOTED OTHERWISE. EXCEPT AS MODIFIED BY THE REQUIREMENTS SPECIFIED HEREIN OR THE DETAILS OF THE DRAWINGS, WORK INCLUDED IN THIS SPECIFICATION SHALL CONFORM TO THE APPLICABLE PROVISIONS OF THESE PUBLICATIONS.

1. NEC (NATIONAL ELECTRICAL CODE)
2. ANSI/IEEE (AMERICAN NATIONAL STANDARDS INSTITUTE)
3. IEEE (INSTITUTE OF ELECTRICAL AND ELECTRONICS ENGINEERS)
4. ASTM (AMERICAN SOCIETY FOR TESTING AND MATERIALS)
5. ICEA (INSULATED CABLE ENGINEERS ASSOCIATION)
6. NEMA (NATIONAL ELECTRICAL MANUFACTURER'S ASSOCIATION)
7. NFPA (NATIONAL FIRE PROTECTION ASSOCIATION)
8. OSHA (OCCUPATIONAL SAFETY AND HEALTH ADMINISTRATION)
9. UL (UNDERWRITERS LABORATORIES, INC.)

1.4 SCOPE OF WORK:

A. WORK UNDER THIS SECTION SHALL CONSIST OF FURNISHING ALL LABOR, MATERIAL AND ASSOCIATED SERVICES REQUIRED TO COMPLETELY CONSTRUCT AND LEAVE READY FOR OPERATION SYSTEMS AS SHOWN ON THE DRAWINGS AND HEREIN DESCRIBED.

B. ALL ELECTRICAL EQUIPMENT UNDER THIS CONTRACT SHALL BE PROPERLY TESTED, ADJUSTED, AND ALIGNED BY THE CONTRACTOR.

C. THE CONTRACTOR SHALL BE RESPONSIBLE FOR ALL EXCAVATING, DRAINING, TRENCHES, BACKFILLING, AND REMOVAL OF EXCESS DIRT.

D. THE CONTRACTOR SHALL FURNISH TO THE OWNER, CERTIFICATES OF FINAL INSPECTION AND APPROVAL FROM THE INSPECTION AUTHORITIES HAVING JURISDICTION.

PART 2: PRODUCTS

2.1 GENERAL:

A. ALL ITEMS OF MATERIALS AND EQUIPMENT SHALL BE NEW, FREE FROM DEFECTS AND OF THE BEST QUALITY NORMALLY USED FOR THE PURPOSE IN GOOD COMMERCIAL PRACTICE.

B. ALL MATERIALS AND EQUIPMENT SHALL BE ACCEPTABLE TO THE AUTHORITY HAVING JURISDICTION AS SUITABLE FOR THE USE INTENDED.

C. ALL EQUIPMENT SHALL BEAR THE UNDERWRITERS LABORATORIES LABEL OF APPROVAL, AND SHALL CONFORM TO REQUIREMENTS OF THE NATIONAL ELECTRICAL CODE.

D. ALL OVERCURRENT DEVICES SHALL HAVE AN INTERRUPTING RATING EQUAL TO OR GREATER THAN THE SHORT CIRCUIT CURRENT TO WHICH THEY ARE SUBJECTED, 10,000 AIC MINIMUM. VERIFY AVAILABLE SHORT CIRCUIT CURRENT DOES NOT EXCEED THE RATING OF ELECTRICAL EQUIPMENT.

2.2 MATERIALS AND EQUIPMENT:

A. CONDUIT:

1. RIGID GALVANIZED STEEL CONDUIT (RGS) SHALL BE HOT-DIP GALVANIZED INSIDE AND OUTSIDE INCLUDING ENDS AND THREADS AND ENAMELED OR LACQUERED INSIDE IN ADDITION TO GALVANIZING.
2. FLEXIBLE METAL CONDUIT SHALL BE GALVANIZED, ZINC-COATED STEEL, PVC COATED FOR OUTDOOR APPLICATIONS.
3. CONDUIT CLAMPS, STRAPS AND SUPPORTS SHALL BE STEEL OR MALLEABLE IRON. ALL FITTINGS SHALL BE COMPRESSION TYPE AND WATERTIGHT.
4. NON-METALLIC CONDUIT AND FITTINGS SHALL BE SCHEDULE 40 PVC, HEAVY-WALL RIGID WITH SOLVENT-CEMENT-TYPE JOINTS AS RECOMMENDED BY THE MANUFACTURER.

B. WIRE AND CABLE:

1. WIRE AND CABLE SHALL BE FLAME-RETARDANT, MOISTURE AND HEAT RESISTANT THERMOPLASTIC, SINGLE CONDUCTOR, COPPER, TYPE THHN/THWN-2, 600 VOLT, SIZES AS INDICATED, #12 AWG MINIMUM.
2. #10 AWG AND SMALLER CONDUCTORS SHALL BE SOLID AND #8 AWG AND LARGER CONDUCTORS SHALL BE STRANDED.
3. SOLDERLESS, PRESSURE-TYPE CONNECTORS CONSTRUCTED OF HIGH-STRENGTH, NON-CORRODIBLE, TIN-PLATED COPPER DESIGNED TO FURNISH HIGH-PULLOUT STRENGTH AND HIGH CONDUCTIVITY JOINTS SHALL BE USED.
4. SUPPORT GRIPS SHALL BE SINGLE WEAVE, CLOSED MESH, HIGH-GRADE, NON-MAGNETIC, TIN-COATED BRONZE CAPABLE OF SUPPORTING TEN TIMES THE CABLE DEAD WEIGHT, HUBBELL KELLEMS OR APPROVED EQUAL.

C. DISCONNECT SWITCHES:

1. DISCONNECT SWITCHES SHALL BE HEAVY DUTY, DEAD-FRONT, QUICK-MAKE, QUICK-BREAK, EXTERNALLY OPERABLE, HANDLE LOCKABLE AND INTERLOCKED WITH COVER IN CLOSED POSITION, RATING AS INDICATED, UL LABELED FURNISHED IN NEMA 3R ENCLOSURE, SQUARE D CLASS 3110 OR APPROVED EQUAL.

D. SYSTEM GROUNDING:

1. GROUNDING CONDUCTOR SHALL BE SOLID TINNED BARE COPPER, SIZE AS INDICATED, EXCEPT ABOVE GROUND GROUNDING CONDUCTORS SHALL BE STRANDED INSULATED.
2. GROUND BUSSES SHALL BE GALVANIZED STEEL BARS OF RECTANGULAR CROSS SECTION.
3. CONNECTORS SHALL BE HIGH-CONDUCTIVITY, HEAVY DUTY, LISTED AND LABELED AS GROUNDING CONNECTORS FOR THE MATERIALS USED. USE TWO-HOLE COMPRESSION LUGS WITH HEAT SHRINK FOR MECHANICAL CONNECTIONS.
4. EXOTHERMIC WELDED CONNECTIONS SHALL BE PROVIDED IN KIT FORM AND SELECTED FOR THE SPECIFIC TYPES, SIZES, AND COMBINATIONS OF CONDUCTORS AND OTHER ITEMS TO BE CONNECTED.
5. GROUND RODS SHALL BE COPPER-CLAD STEEL WITH HIGH-STRENGTH STEEL CORE AND ELECTROLYTIC-GRADE COPPER OUTER SHEATH, MOLTEN WELDED TO CORE, 3/4" x 10'-0".

E. OTHER MATERIALS:

1. THE CONTRACTOR SHALL PROVIDE OTHER MATERIALS, THOUGH NOT SPECIFICALLY DESCRIBED, WHICH ARE REQUIRED FOR A COMPLETELY OPERATIONAL SYSTEM AND PROPER INSTALLATION OF THE WORK.

STAMP:

STATE OF NEW HAMPSHIRE
SHELTON DOUGLAS KEISLING
No. 18260
LICENSED
PROFESSIONAL ENGINEER
11/18/2024
EF94D8A5B80B407...

ENGINEERING LICENSE:
STATE OF NEW HAMPSHIRE
PE CERTIFICATE OF AUTHORIZATION # 01191

ENGINEER:		PE#:	DISCIPLINE:	
SDK	SHELTON D. KEISLING	18260	ELECTRICAL	E
TMS	TERRANCE M. SUPER	10926	ELECTRICAL	E

PLANS PREPARED FOR:

PLANS PREPARED BY:

DRAWING NOTICE:
THIS DRAWING HAS NOT BEEN PUBLISHED AND IS THE SOLE PROPERTY OF SSC, INC. AND IS LENT TO THE BORROWER FOR THEIR CONFIDENTIAL USE ONLY, AND IN CONSIDERATION OF THE LOAN OF THIS DRAWING, THE BORROWER PROMISES AND AGREES TO RETURN IT UPON REQUEST AND AGREES THAT IT WILL NOT BE REPRODUCED, COPIED, LENT OR OTHERWISE DISPOSED OF DIRECTLY OR INDIRECTLY, NOR USED FOR ANY PURPOSE OTHER THAN FOR WHICH IT IS FURNISHED.

SUBMITTALS:

DESCRIPTION	DATE	BY	REV
ISSUED FOR REVIEW	09/20/24	IBA	A
ISSUED FOR PERMITTING	09/25/24	IBA	0
REVISED PER AHJ COMMENTS	11/15/24	IBA	1

APPLICANT SITE NAME:
WHOLE FOOD (PORTSMOUTH)

APPLICANT SITE NUMBER:
AGI-INA-NH-0001

SITE ADDRESS:
1600 WOODBURY AVE
PORTSMOUTH, NH 03801

SHEET DESCRIPTION:
SPECIFICATIONS
(4 OF 5)

SHEET #:
SP-2.0

Docusign Envelope ID: 1C4F2B64-D77B-41F4-BC3F-6BCF8F1E1FE7

PART 3: EXECUTION

3.1 GENERAL:

A. ALL MATERIALS AND EQUIPMENT SHALL BE INSTALLED IN STRICT ACCORDANCE WITH THE MANUFACTURER'S RECOMMENDATIONS.

B. EQUIPMENT SHALL BE TIGHTLY COVERED AND PROTECTED AGAINST DIRT OR WATER, AND AGAINST CHEMICAL OR MECHANICAL INJURY DURING INSTALLATION AND CONSTRUCTION PERIODS.

3.2 LABOR AND WORKMANSHIP:

A. ALL LABOR FOR THE INSTALLATION OF MATERIALS AND EQUIPMENT FURNISHED FOR THE ELECTRICAL SYSTEM SHALL BE DONE BY EXPERIENCED MECHANICS OF THE PROPER TRADES.

B. ALL ELECTRICAL EQUIPMENT FURNISHED SHALL BE ADJUSTED, ALIGNED AND TESTED BY THE CONTRACTOR AS REQUIRED TO PRODUCE THE INTENDED PERFORMANCE.

C. UPON COMPLETION OF THE WORK, THE CONTRACTOR SHALL THOROUGHLY CLEAN ALL EXPOSED EQUIPMENT, REMOVE ALL LABELS AND ANY DEBRIS, CRATING OR CARTONS AND LEAVE THE INSTALLATION FINISHED AND READY FOR OPERATION.

3.3 COORDINATION:

A. THE CONTRACTOR SHALL COORDINATE THE INSTALLATION OF ELECTRICAL ITEMS WITH THE OWNER–FURNISHED EQUIPMENT DELIVERY SCHEDULE TO PREVENT UNNECESSARY DELAYS IN THE TOTAL WORK.

3.4 INSTALLATION:

A. CONDUIT:

1. ALL ELECTRICAL WIRING SHALL BE INSTALLED IN CONDUIT AS HEREIN SPECIFIED. NO CONDUIT OR TUBING OF LESS THAN 3/4" NOMINAL SIZE SHALL BE USED.
2. PROVIDE RGS CONDUIT FOR ALL EXPOSED, EXTERIOR CONDUIT.
3. PROVIDE SCHEDULE 40 PVC OR RGS CONDUIT BELOW GRADE, 1" MINIMUM, UNLESS NOTED OTHERWISE. ALL 90 DEGREE BENDS TO ABOVE GRADE SHALL BE RGS. MINIMUM BURIAL DEPTH SHALL BE 24" CLEAR TO TOP OF CONDUIT, UNLESS NOTED OTHERWISE.
4. USE GALVANIZED FLEXIBLE STEEL CONDUIT WHERE DIRECT CONNECTION IS NOT DESIRABLE FOR REASONS OF EQUIPMENT MOVEMENT, VIBRATION, OR FOR EASE OF MAINTENANCE. USE LIQUIDTIGHT, PVC COATED FLEXIBLE METAL CONDUIT FOR OUTDOOR APPLICATIONS.
5. INSTALL GALVANIZED FLEXIBLE STEEL CONDUIT AT ALL POINTS OF CONNECTION TO EQUIPMENT MOUNTED ON SUPPORTS TO ALLOW FOR EXPANSION AND CONTRACTION.
6. A RUN OF CONDUIT BETWEEN BOXES OR FITTINGS SHALL NOT CONTAIN MORE THAN THE EQUIVALENT OF FOUR QUARTER–BENDS INCLUDING THOSE BENDS LOCATED IMMEDIATELY AT THE BOX OR FITTING. THE RADIUS OF BENDS SHALL NEVER BE SHORTER THAN THAT OF THE CORRESPONDING TRADE ELBOW.
7. WHERE CONDUIT HAS TO BE CUT IN THE FIELD, IT SHALL BE CUT SQUARE WITH A PIPE CUTTER USING CUTTING KNIVES.
8. ALL CONDUITS SHALL BE SWABBED CLEAN BY PULLING AN APPROPRIATE SIZE MANDREL THROUGH THE CONDUIT BEFORE INSTALLATION OF WIRE OR CABLE. CLEAR ALL BLOCKAGES AND REMOVE BURRS, DIRT, AND DEBRIS.
9. INSTALL PULL STRINGS IN ALL EMPTY CONDUITS. IDENTIFY PULL STRINGS AT EACH END WITH ITS DESTINATION.
10. PROVIDE INSULATED GROUNDING BUSHINGS FOR ALL CONDUITS STUBBED INTO EQUIPMENT ENCLOSURES OR STUBBED OUT FOR FUTURE USE BY OTHERS.
11. CONTRACTOR IS RESPONSIBLE FOR PROTECTING ALL CONDUITS DURING CONSTRUCTION. TEMPORARY OPENINGS IN THE CONDUIT SYSTEM SHALL BE PLUGGED OR CAPPED TO PREVENT ENTRANCE OF MOISTURE OR FOREIGN MATTER. CONTRACTOR SHALL REPLACE ANY CONDUITS CONTAINING FOREIGN MATERIALS THAT CANNOT BE REMOVED.
12. INSTALL 2" ORANGE DETECTABLE TAPE 12" ABOVE ALL UNDERGROUND CONDUIT AND WIRE.
13. CONDUITS SHALL BE INSTALLED IN SUCH A MANNER AS TO INSURE AGAINST COLLECTION OF TRAPPED CONDENSATION.

B. WIRE AND CABLE:

1. ALL POWER WIRING SHALL BE COLOR CODED AS FOLLOWS:

DESCRIPTION	120/240V	208Y/120V	480Y/277V
PHASE A	BLACK	BLACK	BROWN
PHASE B	RED	RED	ORANGE
PHASE C		BLUE	YELLOW
NEUTRAL	WHITE	WHITE	GRAY
GROUND	GREEN	GREEN	GREEN

2. SPLICES SHALL BE MADE ONLY AT OUTLETS, JUNCTION BOXES, OR ACCESSIBLE RACEWAYS WITH PRESSURE–TYPE CONNECTORS.
3. PULLING LUBRICANTS SHALL BE SOAPSTONE POWDER, POWDERED TALC, OR A COMMERCIAL PULLING COMPOUND. NO SOAP SUDS, SOAP FLAKES, OIL, OR GREASE SHALL BE USED, AS THESE MAY BE HARMFUL TO CABLE INSULATION. CONTRACTOR SHALL USE NYLON OR HEMP ROPE FOR PULLING CABLE TO AVOID SCORING THE CONDUIT.
4. CABLES SHALL BE NEATLY TRAINED, WITHOUT INTERLACING, AND BE OF SUFFICIENT LENGTH IN ALL BOXES, EQUIPMENT, ETC. TO PERMIT MAKING A NEAT ARRANGEMENT. CABLES SHALL BE SECURED IN A MANNER TO AVOID TENSION ON CONDUCTORS OR TERMINALS, AND SHALL BE PROTECTED FROM MECHANICAL INJURY AND FROM MOISTURE. SHARP BENDS OVER CONDUIT BUSHINGS ARE PROHIBITED. DAMAGED CABLES SHALL BE REMOVED AND REPLACED AT THE CONTRACTOR'S EXPENSE.

C. DISCONNECT SWITCHES:

1. INSTALL DISCONNECT SWITCHES LEVEL AND PLUMB. CONNECT TO WIRING SYSTEM AND GROUND AS INDICATED.

D. GROUNDING:

1. ALL METALLIC PARTS OF ELECTRICAL EQUIPMENT WHICH DO NOT CARRY CURRENT SHALL BE GROUNDED IN ACCORDANCE WITH THE REQUIREMENTS OF ARTICLE 250 OF THE NATIONAL ELECTRICAL CODE.
2. PROVIDE ELECTRICAL GROUNDING AND BONDING SYSTEMS INDICATED WITH ASSEMBLY OF MATERIALS, INCLUDING GROUNDING ELECTRODES, BONDING JUMPERS AND ADDITIONAL ACCESSORIES AS REQUIRED FOR A COMPLETE INSTALLATION.
3. ROUTE GROUNDING CONNECTIONS AND CONDUCTORS TO GROUND IN THE SHORTEST AND STRAIGHTEST PATHS POSSIBLE TO MINIMIZE TRANSIENT VOLTAGE RISES.
4. TIGHTEN GROUNDING AND BONDING CONNECTORS, INCLUDING SCREWS AND BOLTS, IN ACCORDANCE WITH MANUFACTURER'S PUBLISHED TORQUE TIGHTENING VALUES FOR CONNECTORS AND BOLTS. WHERE MANUFACTURER'S TORQUING REQUIREMENTS ARE NOT AVAILABLE, TIGHTEN CONNECTIONS TO COMPLY WITH TIGHTENING TORQUE VALUES SPECIFIED IN UL 486A TO ASSURE PERMANENT AND EFFECTIVE GROUNDING.
5. ALL UNDERGROUND GROUNDING CONNECTIONS SHALL BE MADE BY THE EXOTHERMIC WELD PROCESS AND INSTALLED IN ACCORDANCE WITH THE MANUFACTURER'S INSTRUCTIONS.
6. ALL GROUND CONNECTIONS SHALL BE INSPECTED FOR TIGHTNESS. EXOTHERMIC–WELDED CONNECTIONS SHALL BE APPROVED BY THE CONSTRUCTION INSPECTOR BEFORE BEING PERMANENTLY CONCEALED.
7. APPLY CORROSION–RESISTANT FINISH TO FIELD CONNECTIONS, AND PLACES WHERE FACTORY APPLIED PROTECTIVE COATINGS HAVE BEEN DESTROYED. USE COPPER–BASED "NO–OX" OR APPROVED EQUAL.
8. A SEPARATE, CONTINUOUS, INSULATED EQUIPMENT GROUNDING CONDUCTOR SHALL BE INSTALLED IN ALL FEEDER AND BRANCH CIRCUITS
9. BOND ALL INSULATED GROUNDING BUSHINGS WITH A BARE #6 AWG GROUNDING CONDUCTOR TO A GROUND BUS OR GROUNDING LUG IN ENCLOSURE.
10. DIRECT BURIED GROUND CONDUCTORS SHALL BE INSTALLED AT A NOMINAL DEPTH OF 30" BELOW GRADE, UNLESS NOTED OTHERWISE.
11. ALL GROUNDING CONDUCTORS EMBEDDED IN OR PENETRATING CONCRETE SHALL BE INSULATED OR INSTALLED IN PVC CONDUIT.
12. INSTALL ELECTROLYTIC GROUNDING SYSTEM IN STRICT ACCORDANCE WITH MANUFACTURER'S INSTRUCTIONS. REMOVE SEALING TAPE FROM LEACHING AND BREATHER HOLES. INSTALL PROTECTIVE BOX FLUSH WITH GRADE.
13. DRIVE GROUND RODS UNTIL TOPS ARE 30" BELOW FINAL GRADE.
14. GROUNDING CONDUCTOR TO EQUIPMENT GROUND LUGS:
    a. BOLTED TO EQUIPMENT HOUSING WITH STAINLESS STEEL BOLTS AND LOCK WASHERS.
    b. ALL EQUIPMENT TO BE GROUNDED SHALL BE FREE OF PAINT OR ANY OTHER MATERIAL COVERING BARE METAL AT THE POINT OF CONNECTION.

3.5 ACCEPTANCE TESTING:

A. PROVIDE PERSONNEL AND EQUIPMENT, MAKE REQUIRED TESTS, AND SUBMIT TEST REPORTS UPON COMPLETION OF TESTS.

B. WHEN MATERIAL AND/OR WORKMANSHIP IS FOUND NOT TO COMPLY WITH THE SPECIFIED REQUIREMENTS, THE NONCOMPLYING ITEMS SHALL BE REMOVED FROM THE JOBSITE AND REPLACED WITH ITEMS COMPLYING WITH THE SPECIFIED REQUIREMENTS PROMPTLY AFTER RECEIPT OF NOTICE OF SUCH NON–COMPLIANCE.

C. TEST PROCEDURES:

1. ALL FEEDERS SHALL HAVE THEIR INSULATION TESTED AFTER INSTALLATION, BUT BEFORE CONNECTION TO DEVICES. THE CONDUCTORS SHALL TEST FREE FROM SHORT CIRCUITS AND GROUNDS. TESTING SHALL BE FOR ONE MINUTE USING 1000V DC. INVESTIGATE ANY VALUES LESS THAN 50 MEGAOHMS.
2. PRIOR TO ENERGIZING CIRCUITRY, TEST WIRING DEVICES FOR ELECTRICAL CONTINUITY AND PROPER POLARITY CONNECTIONS.
3. MEASURE AND RECORD VOLTAGES BETWEEN PHASES AND BETWEEN PHASE WIRES AND NEUTRALS. SUBMIT A REPORT OF MAXIMUM AND MINIMUM VOLTAGES.
4. PERFORM GROUND TEST TO MEASURE GROUND RESISTANCE OF GROUNDING SYSTEM USING THE IEEE STANDARD 3–POINT "FALL–OF–POTENTIAL" METHOD. PROVIDE PLOTTED TEST VALUES & LOCATION SKETCH. NOTIFY THE ENGINEER IMMEDIATELY IF MEASURED VALUE IS OVER 5 OHMS.

END OF SECTION

END OF SPECIFICATION

STAMP:

11/18/2024

STATE OF NEW HAMPSHIRE
SHELTON DOUGLAS KEISLING
No. 18260
LICENSED
PROFESSIONAL ENGINEER

EF94D8A5B80B407...

ENGINEERING LICENSE:

STATE OF NEW HAMPSHIRE

PE CERTIFICATE OF AUTHORIZATION # 01191

ENGINEER:		PE#:	DISCIPLINE:	
SDK	SHELTON D. KEISLING	18260	ELECTRICAL	E
TMS	TERRANCE M. SUPER	10926	ELECTRICAL	E

iONNA™

PLANS PREPARED FOR:

AGI

PLANS PREPARED BY:

SSC

DRAWING NOTICE:

THIS DRAWING HAS NOT BEEN PUBLISHED AND IS THE SOLE PROPERTY OF SSC, INC. AND IS LENT TO THE BORROWER FOR THEIR CONFIDENTIAL USE ONLY, AND IN CONSIDERATION OF THE LOAN OF THIS DRAWING, THE BORROWER PROMISES AND AGREES TO RETURN IT UPON REQUEST AND AGREES THAT IT WILL NOT BE REPRODUCED, COPIED, LENT OR OTHERWISE DISPOSED OF DIRECTLY OR INDIRECTLY, NOR USED FOR ANY PURPOSE OTHER THAN FOR WHICH IT IS FURNISHED.

SUBMITTALS:

DESCRIPTION	DATE	BY	REV
ISSUED FOR REVIEW	09/20/24	IBA	A
ISSUED FOR PERMITTING	09/25/24	IBA	0
REVISED PER AHJ COMMENTS	11/15/24	IBA	1

APPLICANT SITE NAME:

WHOLE FOOD (PORTSMOUTH)

APPLICANT SITE NUMBER:

AGI-INA-NH-0001

SITE ADDRESS:

1600 WOODBURY AVE
PORTSMOUTH, NH 03801

SHEET DESCRIPTION:

SPECIFICATIONS
(5 OF 5)

SHEET #:

SP-2.1

Docusign Envelope ID: 1C4F2B64-D77B-41F4-BC3F-6BCF8F1E1FE7

Installation and Maintenance Manual

hypercharger HYC_400UL
(100 kW – 400 kW)
Ultra-fast charging system for electric vehicles

for HW version 4

All rights reserved. Reproduction, in whole or part, of this document is permissible only with express written consent from alpitronic Americas LLC.

Docusign Envelope ID: 1C4F2B64-D77B-41F4-BC3F-6BCF8F1E1FE7

NOTES

1. METER PLACEMENT, CT CABINET AND FINAL SWITCHBOARD/DISTRIBUTION DESIGN TO BE COORDINATED ACCORDING TO UTILITY REQUIREMENTS. CONTRACTOR TO PROVIDE METER SOCKET (METER ENCLOSURE) PER LISTED ON LOCAL UTILITY'S APPROVED METER ENCLOSURE LIST.
2. THE MAIN CIRCUIT BREAKER IN THIS SWITCHBOARD SHALL BE 100% RATED.
3. PROVIDE GROUND FAULT PROTECTION (GFP) FOR EQUIPMENT PER NEC ARTICLE 230.95.
4. SEE UTILITY POWER MANUAL FOR ADDITIONAL INFORMATION.
5. THIS SWITCHBOARD IS INSTALLED WITH AN ENERGY REDUCTION MAINTENANCE SWITCH (ERMS), AKA RELT, AT THE MAIN BREAKER FOR ARC FLASH MITIGATION PER NEC ARTICLE 240.87.
6. THE SERVICE EQUIPMENT SHALL BE FIELD MARKED IN COMPLIANCE WITH ALL REQUIREMENTS STATED IN NEC ARTICLES 110.24(A) AND 230.70(B).

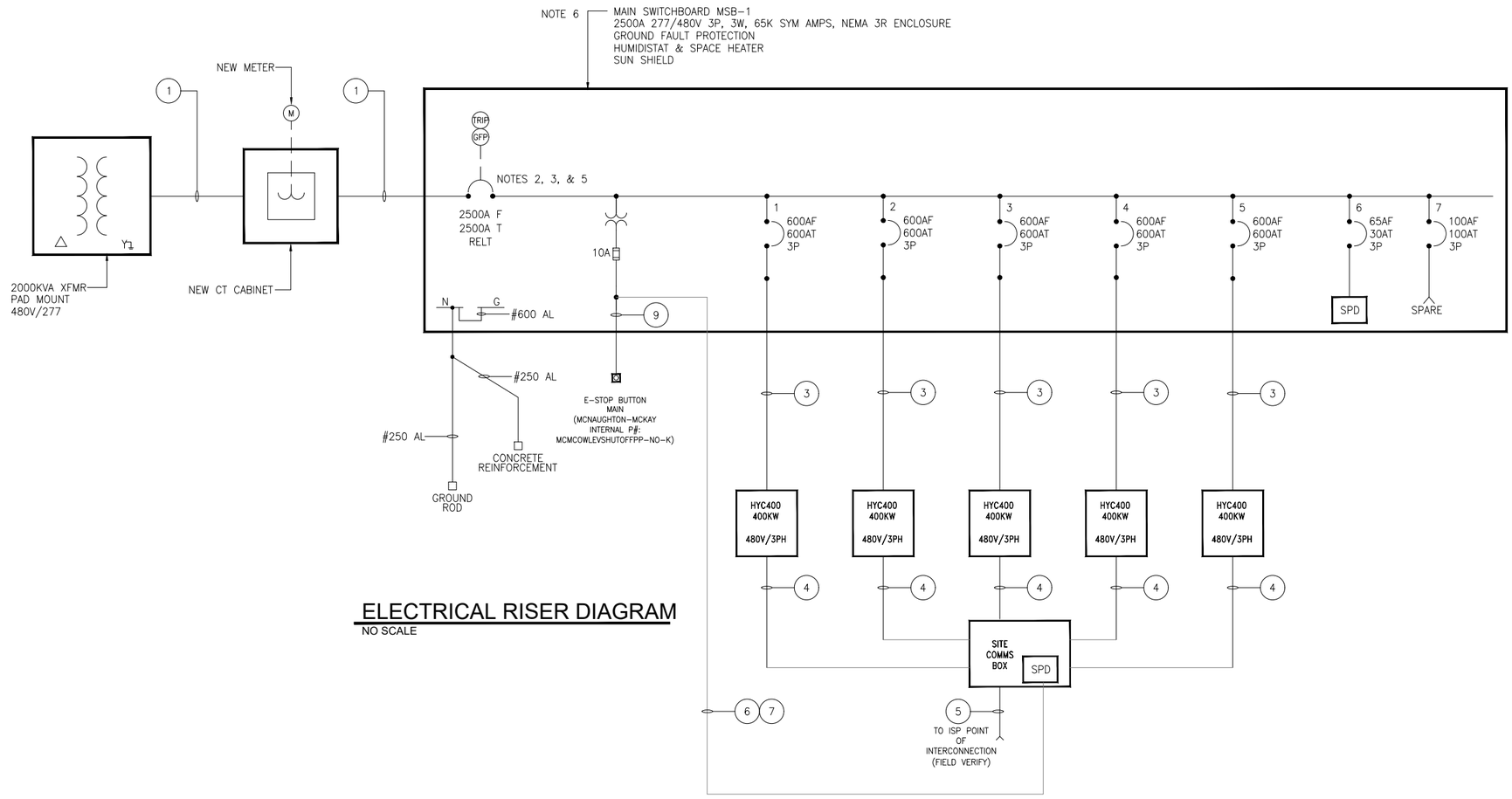

ELECTRICAL RISER DIAGRAM

NO SCALE

NEW MAIN SWITCHBOARD MSB-1											
MAIN	2500 (100% RATED)			VOLTAGE:	480/277			PHASE:	3		
MTG	FLOOR			AIC:	65K			WIRE:	4		
CKT	CIRCUIT BREAKER			DESCRIPTION	LOAD (KVA)				PHASE		
#	FRAME	TRIP	POLE		LTG	REC	MTR	MISC	A	B	C
1	600	600	3	HYC400 DISPENSER 1				133.0			
								133.0			
								133.0			
2	600	600	3	HYC400 DISPENSER 2				133.0			
								133.0			
								133.0			
3	600	600	3	HYC400 DISPENSER 3				133.0			
								133.0			
								133.0			
4	600	600	3	HYC400 DISPENSER 4				133.0			
								133.0			
								133.0			
5	600	600	3	HYC400 DISPENSER 5				133.0			
								133.0			
								133.0			
6	65	30	3	SPD				0.0			
								0.0			
								0.0			
7	100	100	3	SPARE							
					0	0	0	1995.2			
CONNECTED LOAD (KVA):				1995.2				AMPS		KVA	
DEMAND LOAD (KVA):				1995.2			PHASE A	2401.0		665.1	
							PHASE B	2401.0		665.1	
CONNECTED LOAD (AMPS):				2399.8			PHASE C	2401.0		665.1	
DEMAND LOAD (AMPS):				2399.8							

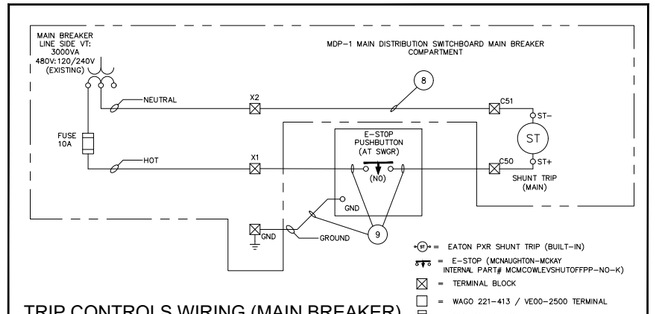

TRIP CONTROLS WIRING (MAIN BREAKER)

NO SCALE

CONDUIT AND WIRING SCHEDULE

	FROM	TO	CONFIGURATION
1	PROPOSED TRANSFORMER	PROPOSED 480V SWITCHBOARD	(4) #600 KCMIL AL (THWN-2) IN EACH OF (8) 4" SCH 40 PVC CONDUITS
2	PROPOSED UTILITY TRANSFORMER (BY OTHERS)	PROPOSED METER	1-1/4" PVC CONDUIT FOR METERING CIRCUITS PER UTILITY
3	PROPOSED 480V SWITCHBOARD	PROPOSED HYC400 DISPENSER (POST)	(3) #500 KCMIL AL (THWN-2) + (1) #2/0 AWG AL (THWN-2) EGC IN EACH OF (2) 3" SCH 40 PVC CONDUITS
4	PROPOSED HYC400 DISPENSER (POST)	SITE COMMS BOX	(1) FIBER OPTIC CABLE IN (1) 1" SCH 40 PVC CONDUIT FOR COMMS
5	SITE COMMS BOX	ISP POINT OF CONNECTION (FIELD LOCATE)	(1) 1" SCH 40 PVC CONDUIT FOR INTERNET CABLE/FO
6	PROPOSED 480V SWITCHBOARD	SITE COMMS BOX POWER	(2) #10 KCMIL CU (THWN-2) + (1) #10 AWG CU (THWN-2) EGC IN (1) 1" SCH 40 PVC CONDUIT
7	PROPOSED 480V SWITCHBOARD	SITE COMMS BOX SPD	(3) #10 KCMIL CU (THWN-2) + (1) #10 AWG CU (THWN-2) EGC IN (1) 1" SCH 40 PVC CONDUIT
8	MAIN BREAKER CONTROLS WITHIN SWITCHBOARD	MAIN BREAKER CONTROLS WITHIN SWITCHBOARD	(1) #14 AWG CU (THWN-2)
9	SWITCHBOARD MAIN BKR SECTION SHUNT MODULE & CONTROLS	E-STOP BUTTON	(2) #14 AWG CU (THWN-2) + (1) #14 AWG CU (THWN-2) EGC IN EACH OF (1) 1" SCH 40 PVC CONDUIT

IONNA

OWL

STATE OF OHIO
PHILLIP J. JAMINET
E-70353
REGISTERED
PROFESSIONAL ENGINEER

IONNA - WILLOUGHBY CHARGING HUB
4145 OH-306
WILLOUGHBY, OH 44094

NO.	DATE	REVISION DESCRIPTION
A	06/17/24	CD-50
B	06/27/24	CD-90 FOR INTERNAL REVIEW
C	7/3/24	CD-90 FOR PERMITTING
-	-	-
-	-	-

DATE
06/17/2024

SHEET TITLE
ELECTRICAL SINGLE LINE DIAGRAM

SHEET NUMBER
E-2.0

Docusign Envelope ID: 1C4F2B64-D77B-41F4-BC3F-6BCF8F1E1FE7

SPECIFICATIONS

1. CONSTRUCTION
UL TYPE 3R, GA. STEEL, OSHPD OSP-0308-10, UL 891

2. FINISH
CARDINAL T007-WH121 POWDER COAT, WHITE, 70% GLOSS

3. SERVICE
UNKNOWN, 2500A, 480VAC, 3ϕ 4W, 65KAIC

4. BUS
SILVER-PLATED COPPER

NOTE: REAR OR SIDE ACCESS REQUIRED

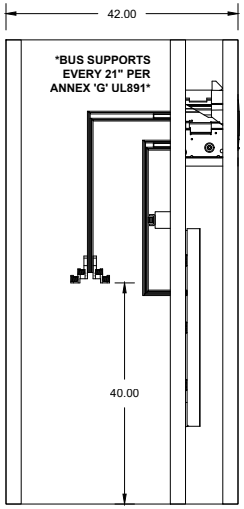

INTERIOR SIDE ELEVATION
APPROX. BUS DETAIL SHOWN WITHOUT 3R COMPONENTS

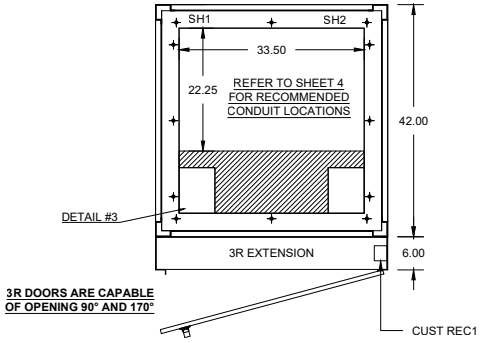

BASE LAYOUT
(REFER TO SHEET 4 FOR ANCHOR LOCATIONS)

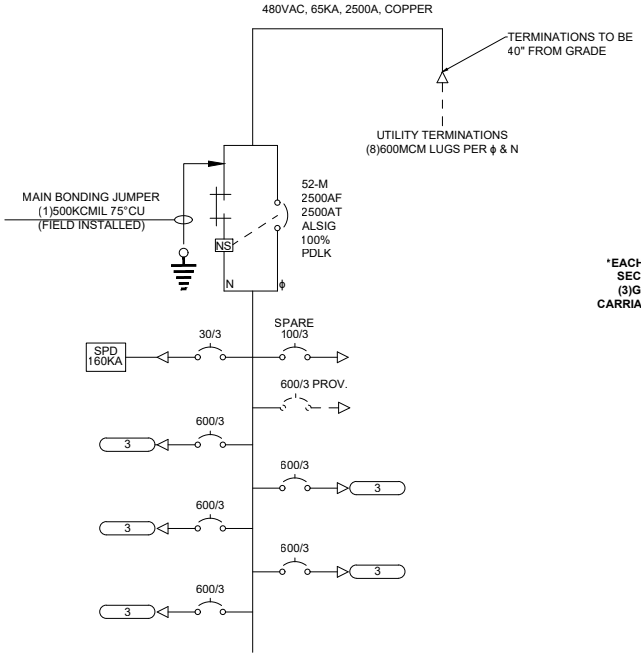

CABLE SCHEDULE

3 (2) 500KCMIL PER ϕ , (2) #1 AWG GND

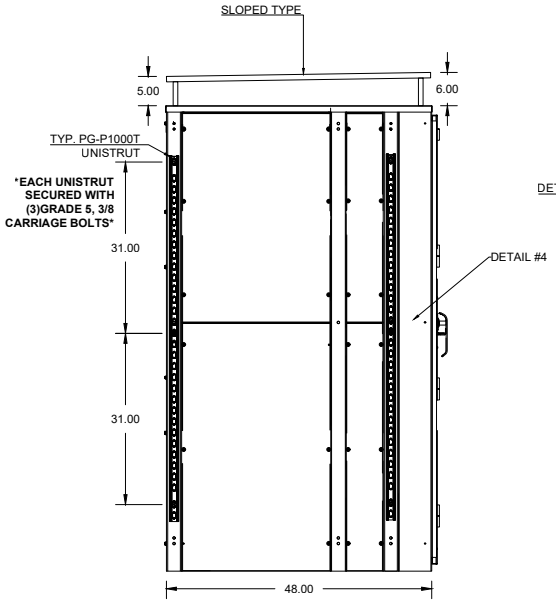

SIDE ELEVATION
SHOWN WITH 3R DOORS

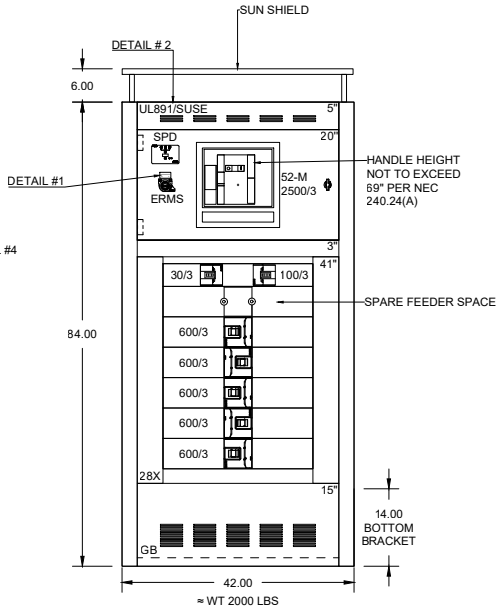

FRONT ELEVATION
SHOWN WITH 3R COMPONENTS REMOVED FOR CLARITY

POWER & DISTRIBUTION
16450 PHOEBE AVENUE
LA MIRADA, CA 90638
PHONE: (714)-307-9198

CUSTOMER APPROVAL:

#	REVISION	DATE
0	ISSUED FOR APPROVAL	08/14/24

SITE NAME:
IONNA
WILLOUGHBY CHARGING HUB
MSB-1

ADDRESS:
4145 OH-306,
WILLOUGHBY, OH 44094

DRAWING: 2408-3-17102

SHEET DESCRIPTION: ELEVATIONS/ SPECIFICATIONS

DRAWN BY:	SHEET:
EB	1
REV:	PAPER:
0	8.5"X 11"

PLOT DATE: 8/14/2024 5:16 AM BY: EDWINBAZ V:\#_SO\~Ionna\17102_Willoughby Charging Hub

Docusign Envelope ID: 1C4F2B64-D77B-41F4-BC3F-6BCF8F1E1FE7

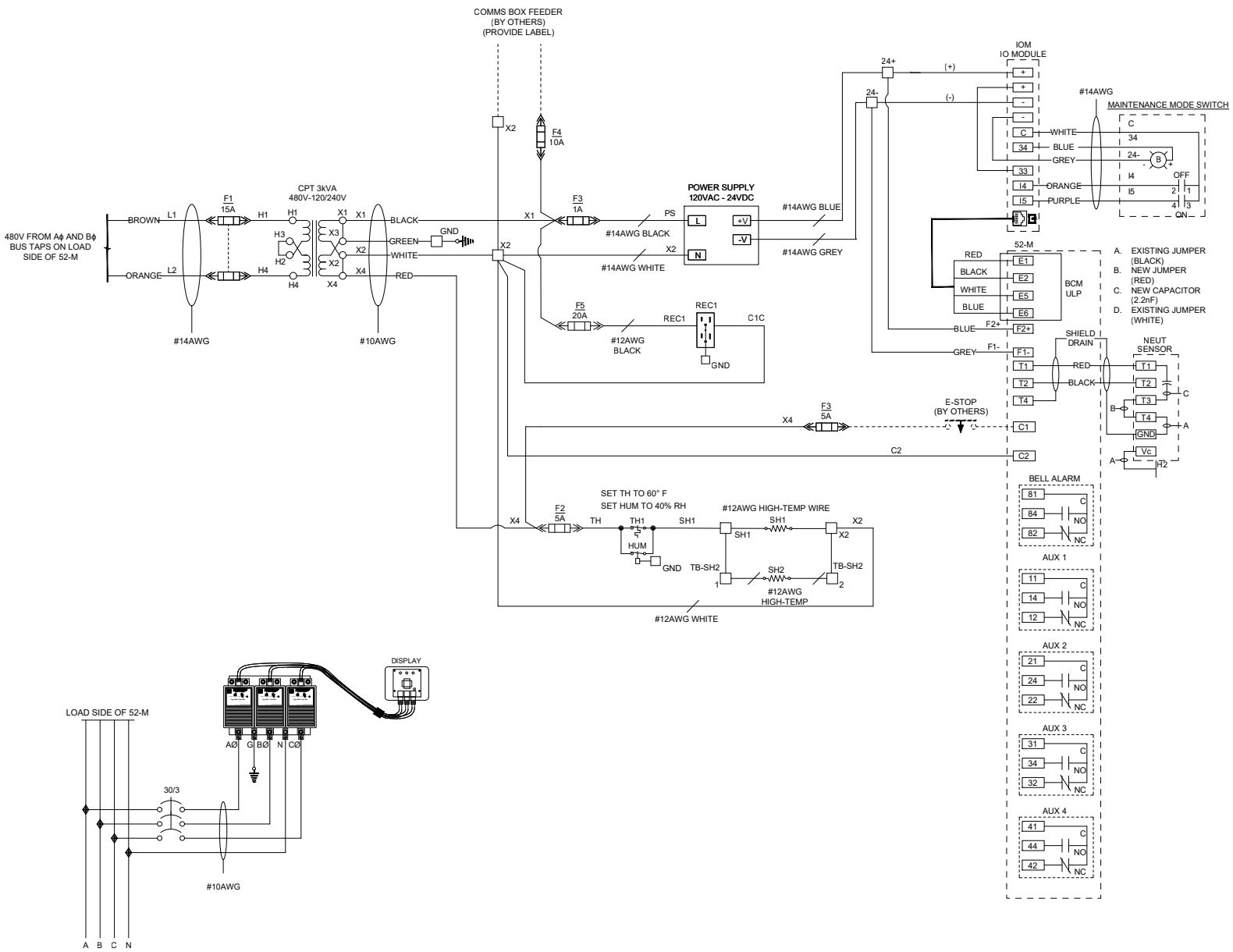

POWER & DISTRIBUTION
16450 PHOEBE AVENUE
LA MIRADA, CA 90638
PHONE: (714)-307-9198

CUSTOMER APPROVAL:

#	REVISION	DATE
0	ISSUED FOR APPROVAL	08/14/24

SITE NAME:

IONNA
WILLOUGHBY CHARGING
HUB
MSB-1

ADDRESS:

4145 OH-306,
WILLOUGHBY, OH 44094

DRAWING:
2408-3-17102

SHEET DESCRIPTION:
WIRING SCHEME

DRAWN BY:	SHEET:
EB	2
REV:	PAPER:
0	8.5"X 11"

PLOT DATE: 8/14/2024 5:16 AM BY: EDWINBAZ V:\#_SO\~Ionna\17102_Willoughby Charging Hub

Docusign Envelope ID: 1C4F2B64-D77B-41F4-BC3F-6BCF8F1E1FE7

DETAIL #1
WHITE LETTERING ON
RED BACKGROUND

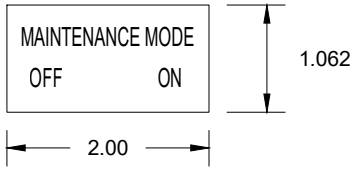

DETAIL #2

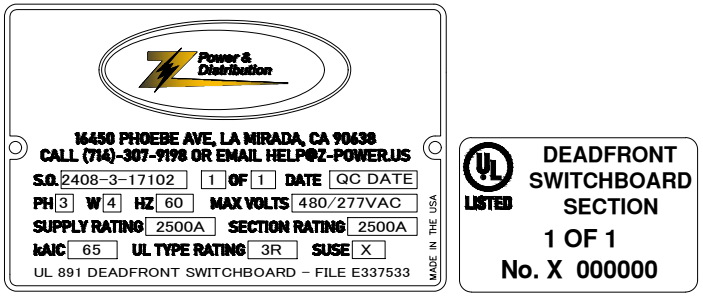

DETAIL #3
FRONT CONDUIT
OPENING

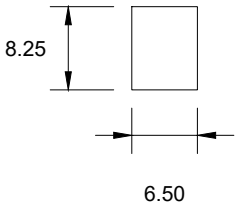

DETAIL #4
TH/HUM/REC MOUNTING

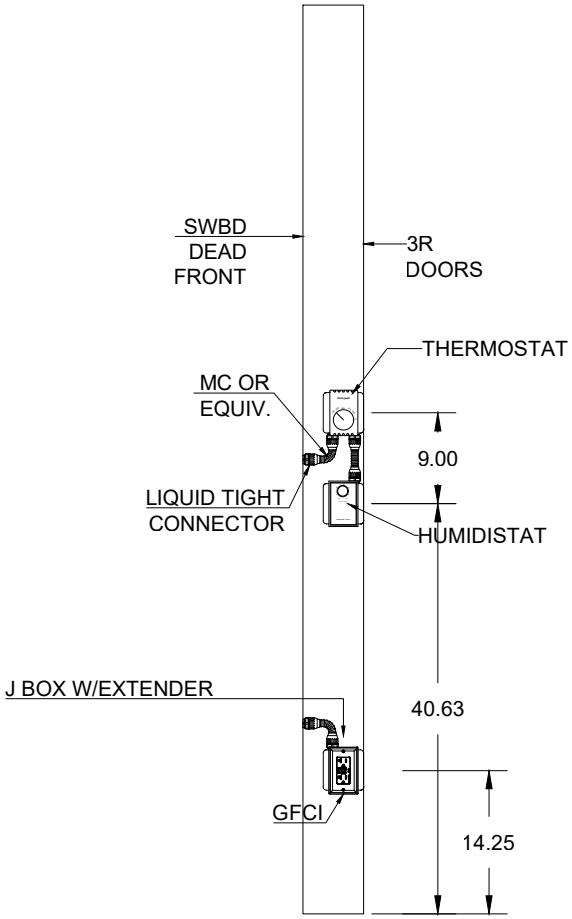

RIGHT 3R EXTENSION
ALL DIMENSIONS ARE APPROX.

POWER & DISTRIBUTION
16450 PHOEBE AVENUE
LA MIRADA, CA 90638
PHONE: (714)-307-9198

CUSTOMER APPROVAL:

#	REVISION	DATE
0	ISSUED FOR APPROVAL	08/14/24

SITE NAME:
IONNA
WILLOUGHBY CHARGING
HUB
MSB-1

ADDRESS:
4145 OH-306,
WILLOUGHBY, OH 44094

DRAWING:
2408-3-17102

SHEET DESCRIPTION:
DETAILS #1-4

DRAWN BY:	SHEET:
EB	3
REV:	PAPER:
0	8.5"X 11"

PLOT DATE: 8/14/2024 5:16 AM BY: EDWINBAZ V:\#_SO\~Ionna\17102_Willoughby Charging Hub

Docusign Envelope ID: 1C4F2B64-D77B-41F4-BC3F-6BCF8F1E1FE7

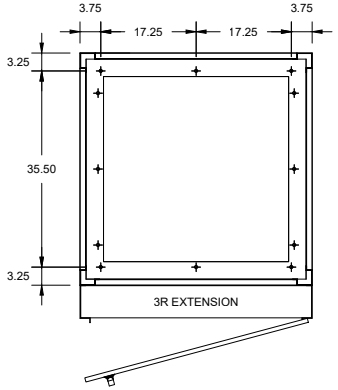

BASE PLAN - FRONT AND BACK ANCHORING OPTION

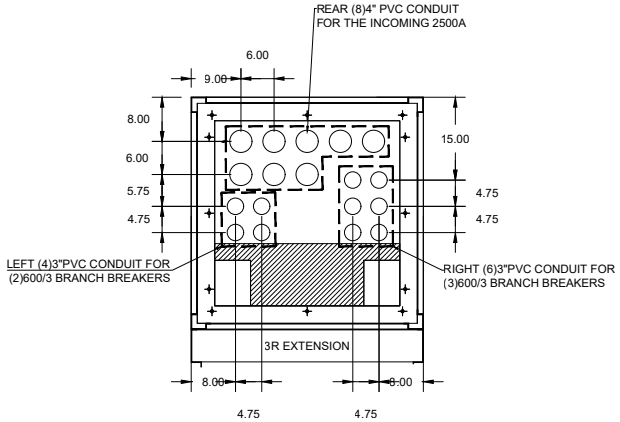

BASE PLAN - CONDUIT LOCATION RECOMMENDATIONS

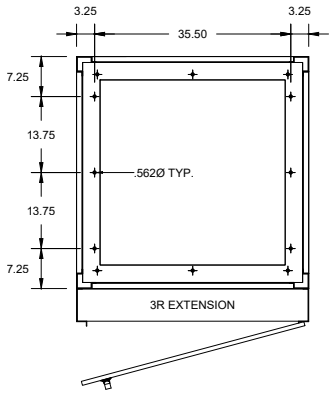

BASE PLAN - SIDES ANCHORING OPTION

ITEM	QTY.	MFG	CAT. No.	DESCRIPTION	REV
2500/3	1	SQ D	WL3GGH64A35XXXXXCXT	MODEL NW25H 3-POLE, 2500A, 100% 100KAIC 480VAC, 2500A SENSOR PLUG, TYPE 'A' PLUG, TRIP UNIT TYPE 6.0P ALSIG, (4) AUX CONTACTS, PROV. FOR PADLOCK AND PROVISIONS , HORIZONTAL REAR CONNECTED "T"	
	1	SQ D	S48182	NEUTRAL SENSOR 2500A-3000A	
ERMS	1	SQ D	9001K11J35LLL	SWITCH WITH BLUE INDICATOR LIGHT (24VDC)	
	1	SQ D	9001KA1	SWITCH CONTACT BLOCK	
	1	SQ D	9001K7	PADLOCK ATTACHMENT	
	1	SQ D	LV434063	I/O MODULE	
	1	SQ D	LV434196	CIRCUIT BREAKER ULP CORD 4.27 FT	
600/3	5	EATON	PDG33M0600B2NN	MCCB, 600AT/600AF, 3P, 65KA/480V, 80%, PXR10 LSI TRIP UNIT	
	5	EATON	PDG3XPLKTOFF	PADLOCK PROVISION, FRAME 3	
	5	EATON	PDG3X3TA630	(2)#2-500 KCMIL LOAD LUGS	
100/3	1	EATON	PDG23M0100B2NL	MCCB, 100AF/100AT, 3P, 65KA/480V, 80%, PXR10 LSI TRIP UNIT, (1)#14-1/0	
	1	EATON	PDG2XPLKTOFF	PADLOCK PROVISION, FRAME 2	
30/3	1	EATON	PDG23M0060B2NL	MCCB, 60AF/30AT, 3P, 65KA/480V, 80%, PXR10 LSI TRIP UNIT. (1)#14-1/0 LOAD LUGS	
	1	EATON	PDG2XPLKTOFF	PADLOCK PROVISION, FRAME 2	
CPT	1	HAMMOND	C1F003LES	CONTROL POWER TRANSFORMER 480-120/240V, 3.0 KVA	
PS	1	PHOENIX	2902991	POWER SUPPLY, 120VAC IN, 24VDC OUTPUT, 30W	
F1-5	LOT	FERRAZ	USCC1I, USCC2I,USCC3I	30A 1P, 2P,3P 600VAC FUSE BLOCKS	
SPD	1	SQ D	TVS4IMA160	SURGE PROTECTION DEVICE, 160KA, 480VAC + GND DELTA, REMOTE DISPLAY	
REC	1	HUBBLE	GFRST20W	20A 120VAC GFCI RECEPTACLE	
TH	1	CADET	T410A	THERMOSTAT 50-90 F, 22A	
HUM	1	BROAN	DD500W OR EQUIV	DE-HUMIDISTAT 20-80% RH	
SH	2	TEMPCO	CSF00500	STRIP HEATER 350W, 120V	

POWER & DISTRIBUTION
16450 PHOEBE AVENUE
LA MIRADA, CA 90638
PHONE: (714)-307-9198

CUSTOMER APPROVAL:

#	REVISION	DATE
0	ISSUED FOR APPROVAL	08/14/24

SITE NAME:
IONNA
WILLOUGHBY CHARGING HUB
MSB-1

ADDRESS:
4145 OH-306,
WILLOUGHBY, OH 44094

DRAWING: 2408-3-17102

SHEET DESCRIPTION: ANCHORING LOCATIONS/BOM

DRAWN BY: EB | SHEET: 4

REV: 0 | PAPER: 8.5"X 11"

PLOT DATE: 8/14/2024 5:16 AM BY: EDWINBAZ V:\#_SO\~Ionna\17102_Willoughby Charging Hub

Docusign Envelope ID: 1C4F2B64-D77B-41F4-BC3F-6BCF8F1E1FE7

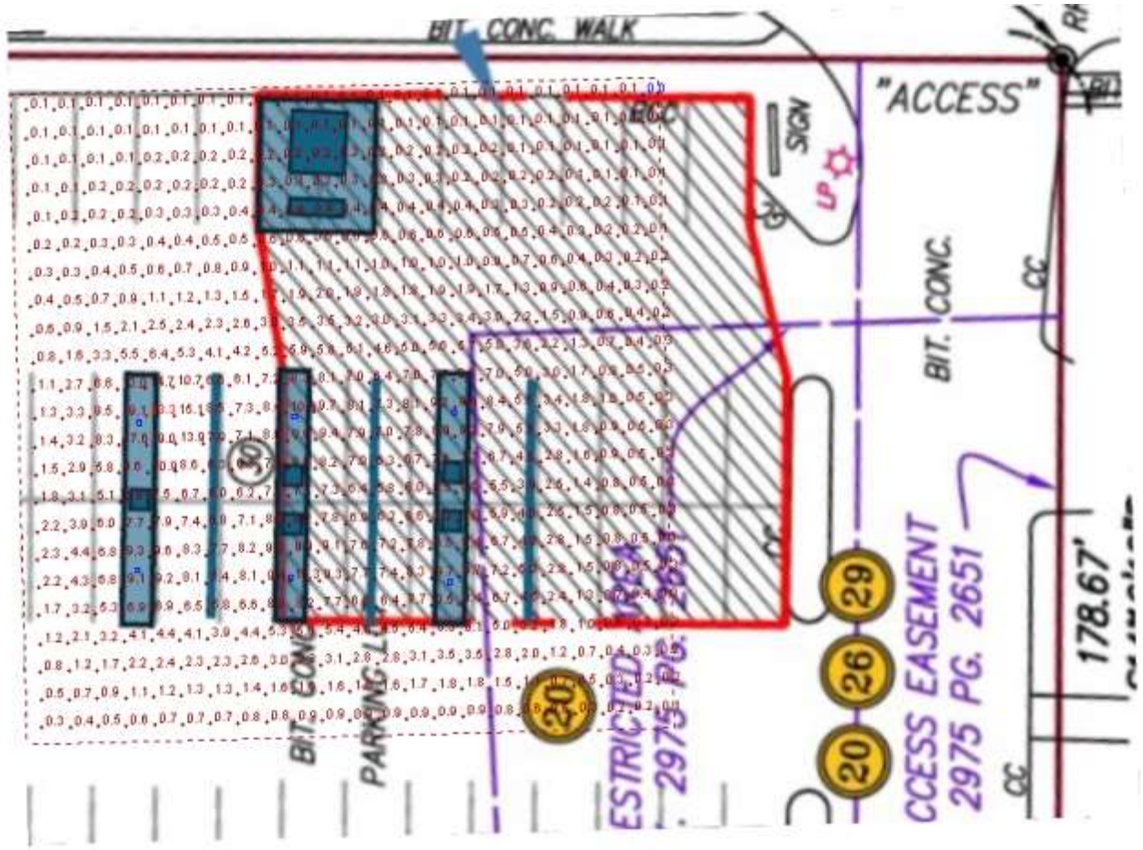

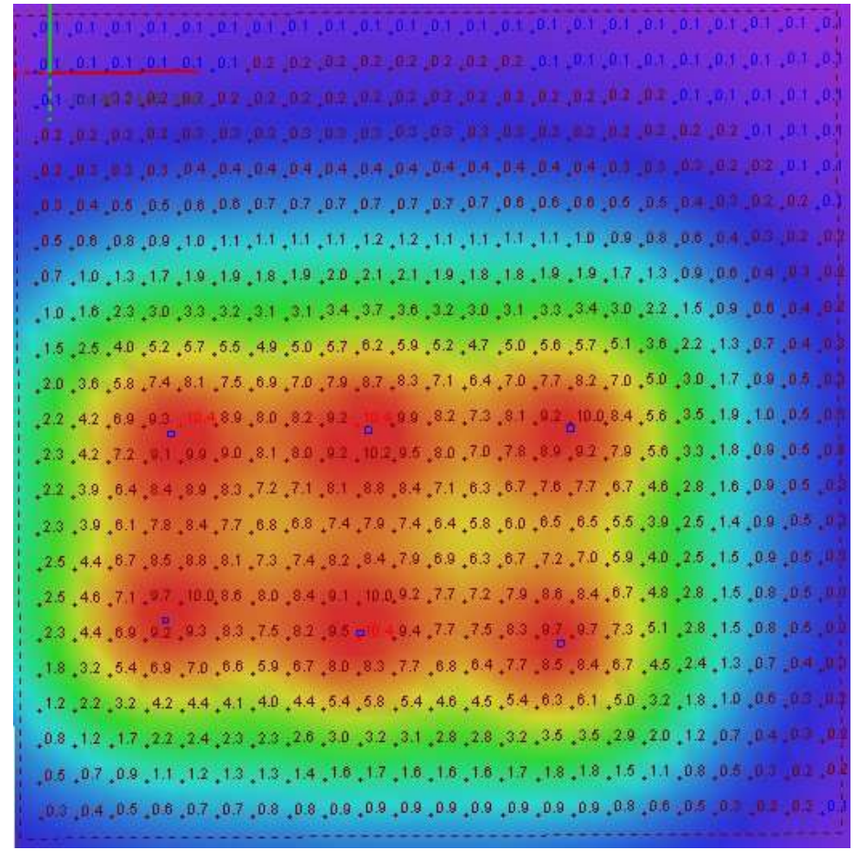

Statistics

Description	Symbol	Avg	Max	Min	Max/Min	Avg/Min
Calc Zone #2	+	3.1 fc	23.3 fc	0.0 fc	0.0 fc	N/A

Schedule

Symbol	Label	QTY	Manufacturer	Catalog	Number Lamps	Lamp Output	LLF	Input Power	Polar Plot
	A	6	KEYSTONE TECHONOLOGIES LLC	KT-CLED60PS-M1-8CSB-VDIM-Z (Setting at 3000K)	1	7706	1	57.31	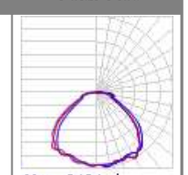 Max: 2404cd

Glantz

Ionna NH Dark Skies renedering
AGI Knoxvile, TN
Keystone CLED 60 watt (6 ea.)

Designer
TJ Grunwald CLEP
Date
11/13/2024
Scale
Not to Scale
Drawing No.

Summary

Docusign Envelope ID: 1C4F2B64-D77B-41F4-BC3F-6BCF8F1E1FE7

iONNA Single Pole 4-Plug Canopy
1600 Woodbury Avenue
Portsmouth, NH 03801

RBA Job No. 24 45149

CALCULATIONS FOR:
Standalone Canopy

Designed in accordance with:
2021 International Building Code / New Hampshire Building Code
ASCE 7-16
Wind Velocity = 125 mph
Risk Category II

STATE OF NEW HAMPSHIRE
STEVEN EMERY QUALLS
No.16740
LICENSED
PROFESSIONAL ENGINEER

09/24/2024

FABRICATOR
Architectural Graphics, Inc.
2655 International Parkway
Virginia Beach, Virginia 23452

DESIGN ENGINEER
RBA Structural Engineering, LLC
1 Vantage Way, Suite B-400
Nashville, Tennessee 37228

Docusign Envelope ID: 1C4F2B64-D77B-41F4-BC3F-6BCF8F1E1FE7

CANOPY LOADS:

2021 INTERNATIONAL BUILDING CODE ; ASCE 7-16

DEAD LOADS: DECK PANS + FASCIA PANELS : 5 PSF MAX.

STEEL CHANNELS: 9 PLF MAX

HSS 5"x5"x1/4" : 15.62 PLF

COLUMN: 27.48 PLF MAX

SNOW LOAD:

$p_g = 50$ PSF

$p_f = 0.7 C_e C_t I_s p_g = (0.7)(1.1)(1.2)(1.0)(50 PSF) = 46.2$ PSF

$C_e \leq 1.1$

$C_t \leq 1.2$

$I_s = 1.0$

$\gamma = 0.13 p_g + 14 = (0.13)(50 PSF) + 14 = 20.5$ PCF

46.2 PSF / 20.5 PCF = 2.25' EXCEEDS 1'-0" CANOPY HEIGHT ∴ NO DRIFT LOADING

$p_m = 20 I_s = (20)(1.0) = 20$ PSF < 46.2 PSF ⇒ USE p_g

WIND LOAD:

$V \leq 125$ MPH

$q_z = 0.00256 K_z K_{zt} K_d V^2 = 28.90$ PSF

$K_z = 0.85$ (EXP C, $h \leq 11'-10"$)

$K_{zt} = 1.0$

$K_d = 0.85$

VERTICAL WIND:

$p = q_h G C_N = \pm 29.48$ PSF (ULT.)

$G = 0.85$

$C_N = \pm 1.2$ (MAX VALUES)

SERVICE LOADS:

$D + S = 5$ PSF + 46.2 PSF = 51.2 PSF

$D + 0.6W = 5$ PSF + (0.6)(29.48 PSF) = 22.7 PSF

$D + 0.75S + 0.75(0.6W) = 5$ PSF + (0.75)(46.2 PSF) + (0.75)(0.6)(29.48 PSF) = 53.0 PSF (CONTROLS)

HORIZONTAL WIND LOADS: SEE SHEET 2

Docusign Envelope ID: 1C4F2B64-D77B-41F4-BC3F-6BCF8F1E1FE7

CODES:

Wind Loads per provisions of ASCE 7-16, Chapter 29

SIGN DIMENSIONS:

Length, B = **5.00** ft. Height, s = **1.00** ft. OAH Above Grade, h = **11.83** ft.

Depth, t = **16.50** ft. A_{sign} = **5.0** ft^2 Ground Elevation, z_g = **0** ft.

WIND LOADS:

Natural Frequency = **1** **RIGID STRUCTURE**

Exposure Category = **C** Risk Category = **II**

$q_h = 0.00256 * K_z * K_{zt} * K_d * K_e * V^2$ Velocity Pressure, ASCE 7-16, Section 26.10.2

K_z = 0.85 Velocity Pressure Exposure Coefficient, ASCE 7-16, Table 26.10-1

K_{zt} = 1.0 Topographic Factor, ASCE 7-16, Section 26.8.2

K_d = 0.85 Wind Directionality Factor, ASCE 7-16, Table 26.6-1

K_e = 1.00 Ground Elevation Factor, ASCE 7-16, Table 26.9-1

V = **125** Basic Wind Speed, mph, ASCE 7-16, Figure 26.5-1B

q_h = 28.86 lb/ft^2

$F/A = q_h * G * C_f$ Design Wind Loads, ASCE 7-16, Section 29.3.1

G = 0.85 Gust Effect Factor, ASCE 7-16, Section 26.11

B/s = 5.00 Length of Sign/Depth of Sign

s/h = 0.08 Depth of Sign/Overall Height

C_f = 1.85 Force Coefficient, ASCE 7-16, Figure 29.3-1

F/A = 45.39 lb/ft^2

CASE A: resultant acts normal to sign face through the geometric center

CASE B: resultant acts normal to sign face at a distance from the geometric center toward the windward edge equal to 1.00'

CASE C loading applies

LRFD Loading:

Use wind pressure = 45.39 lb/ft^2 for 1.0*W from ASCE 7-16, Section 2.3.1

ASD Loading:

Use wind pressure = 27.23 lb/ft^2 for 0.6*W from ASCE 7-16, Section 2.4.1

Docusign Envelope ID: 1C4F2B64-D77B-41F4-BC3F-6BCF8F1E1FE7

CANOPY CHANNELS:

@ 54" MAX O.C.

$W \leq (53.0\ PSF)(54"/12"/') + 9\ PLF = 248\ PLF$

$L_{CANT} \leq 5'\text{-}0"/2 = 2'\text{-}6"$

$M \leq \frac{(248\ PLF)(2'\text{-}6")^2}{2} = 775\ \#'$

@ MIN. 3" DEEP × 2" WIDE × 1/4": $Z_x = 1.765\ IN^3$

$M_{ALL} \geq \frac{(36000\ PSI)(1.765\ IN^3)}{(12"/')(1.67)} = 3170\ \#' > 775\ \#'$ OK

$P @ BEAM = \frac{(248\ PLF)(5'\text{-}0")}{2} = 620\ \#$ EA. SIDE

@ 2" LONG FLARE-BEVEL TO BEAM:

$\frac{R_{nw}}{\Omega} = \frac{(0.60)(70000\ PSI)(5/8)(1/4")(2")}{2.0} = 6562\ \# > 620\ \#$ OK

MAIN BEAM:

$W \leq (53\ PSF)(5'\text{-}0") + \frac{(9\ PLF)(5'\text{-}0")(4)}{16'\text{-}6"} + 15.62\ PLF = 292\ PLF$

$L_{CANT} \leq 16'\text{-}6"/2 = 8'\text{-}3"$

$M \leq \frac{(292\ PLF)(8'\text{-}3")^2}{2} = 9937\ \#'$

$M_{ALL} \geq 17500\ \#' > 9937\ \#'$ OK

$W_D = (5\ PSF)(5'\text{-}0") + \frac{(9\ PLF)(5'\text{-}0")(4)}{16'\text{-}6"} + 15.62\ PLF = 51.6\ PLF$

DEFLECTION:
$I = 16.0\ IN^4$

$\delta_{DEAD} \simeq \frac{(51.6\ PLF/12"/')(99")^4}{(8)(29{,}000{,}000\ PSI)(16.0\ IN^4)} = 0.111"$

$\sim L/1780$ OK

$\delta_{TOTAL} \simeq \frac{(292\ PLF/12"/')(99")^4}{(8)(29{,}000{,}000\ PSI)(16.0\ IN^4)} = 0.630"$

$\sim L/314 < L/240$ OK

WELD @ R: $S_W = (12")^2/3 \times 5/8 \times 1/4" = 7.5\ IN^3$

$M_{ALL} \geq \frac{(0.60)(70000\ PSI)(7.5\ IN^3)}{(12"/')(2.0)} = 13125\ \#' > 9937\ \#'$ OK

Docusign Envelope ID: 1C4F2B64-D77B-41F4-BC3F-6BCF8F1E1FE7

MATCH PLATE:

$M \le 9937^{\#'}$

$P \le (292\ PLF)(16'\text{-}6") = 4818^{\#}$

$T_b \le \frac{(9937^{\#'})(12"/')}{(9")(2\ BOLTS)} = 6625^{\#}/BOLT$

@ 1" A325:

$\frac{R_n}{\Omega} \ge \frac{\mu D_u h_f T_b n_s}{1.50} = 7684^{\#} > 6625^{\#}$ OK

$\mu \ge 0.20$

$D_u = 1.13$

$h_f = 1.0$

$T_b \ge 51000^{\#}$

$n_s = 1.0$

$M_{PL} \le (2)(6625^{\#})(2.5") = 33125^{\#"}$

$t_{MIN} = \sqrt{\frac{(4)(33125^{\#"})}{(36000\ PSI/1.67)(12")}} = 0.716" < 1"$ OK

COLUMN:

CONSIDER ONLY 1 CANOPY SIDE LOADED FOR MOMENT (CONSERVATIVE)

$M_{TOP} \le 9937^{\#'}$

$P_{D,TOP} \le 4818^{\#}$

$P_{L,TOP} \le (16'\text{-}6")(1'\text{-}0")(27.27\ PSF) = 450^{\#}$

$M_{TOTAL} \le 9937^{\#'} + (450^{\#})(11'\text{-}4") = 15037^{\#'}$

$P_{TOTAL} \le 4818^{\#} + (27.48\ PLF)(11') = 5120^{\#}$

$M_{ALL} \ge 32400^{\#'} > 15037^{\#'}$ OK

$P_{ALL} \ge 78600^{\#} > 5120^{\#}$ OK

$\frac{5120^{\#}}{78600^{\#}} + \frac{8}{9}\left(\frac{15037^{\#'}}{32400^{\#'}}\right) = 0.478 < 1.0$ OK

WELD: $S_W \ge \frac{(\pi)(7" + 3/8")^2}{4}(0.707)(3/8") = 11.32\ IN^3$

$M_{ALL} \ge \frac{(0.60)(70000\ PSI)(11.32\ IN^3)}{(12"/')(2.0)} = 19820^{\#'} > 15037^{\#'}$ OK (TOP & BOTTOM)

BASE PLATE:

$T_b \le \frac{(15037^{\#'})(12"/')}{(9")(2\ ANCHORS)} = 10025^{\#}$

$M_{PL} \le (2)(10025^{\#})(2.1") = 42104^{\#"}$

$t_{MIN} = \sqrt{\frac{(4)(42104^{\#"})}{(36000\ PSI/1.67)(12")}} = 0.807" < 1"$ OK

Docusign Envelope ID: 1C4F2B64-D77B-41F4-BC3F-6BCF8F1E1FE7

UPLIFT CHECK

WIND: $(0.6)(29.48\,PSF)(16'\text{-}6")(5'\text{-}0") = 1460^{\#}$

DEAD: $(0.6)\left[(5\,PSF)(16'\text{-}6")(5'\text{-}0") + (4)(9\,PLF)(5'\text{-}0") + (16'\text{-}6")(15.62\,PLF) + (11')(27.48\,PLF)\right]$
SUPERSTRUCTURE
$= 691^{\#}$

FOUNDATION: $(0.6)(5'\text{-}3")(5'\text{-}3")(3'\text{-}0")(150\,PCF) = 7441^{\#}$

$7441^{\#} + 691^{\#} = 8132^{\#} > 1460^{\#}$ OK

Docusign Envelope ID: 1C4F2B64-D77B-41F4-BC3F-6BCF8F1E1FE7

CHECK FOUNDATIONS:

LRFD Load Combinations: 1.2D + 1.0W — ASCE 7-16, Section 2.3

Resistance Factors:

Φ_{plain} =	0.6	ACI 318
Φ_v =	0.75	ACI 318
Φ_b =	0.9	ACI 318

f'_c =	**2500**	psi
p_a =	**150**	psf/ft
q_a =	**2000**	psf

Total Service Wind Load: P_w = 0.45 kips

Total Service Moment at Base: M = 15.04 k-ft

Rectangular Spread Foundation:

Length = **5.25** ft. Width = **5.25** ft. Depth = **4** ft.

Dead Load, P_d =	16.54	kips						
Overturning Moment, M_o =	17.06	k-ft						
Resistive Moment, M_r =	43.41	k-ft	M_r/M_o =	2.54	>	1.5		**O.K.**
Eccentricity, e = M/P_d =	0.91	ft.	kern, k =	0.88	ft.			**e > k**
Bearing Pressure, q_{max} =	1223.97	psf	<	q_a =	2000	psf		**O.K.**
Moment in Footing M_u =	23.38	k-ft	No Reinforcing Required - Use Minimum Steel					
Use **6** No.	**7**	Bars Top and Bottom - Length.						
Use **6** No.	**7**	Bars Top and bottom - Width.						
Moment Capacity, ΦM_n =	710.37	k-ft	>	M_u =	23.38	k-ft		**O.K.**
Check Shear, V_u =	N/A		*See Note Below					
Shear Capacity, $\Phi * V_u$ =	40.11	kips/ft						

Hilti PROFIS Engineering 3.1.3

www.hilti.com

Company:	Ross Bryan Associates	Page:	7
Address:		Specifier:	Jacob R. Holloway
Phone I Fax:	(615) 329-1300 |	E-Mail:	
Design:	iONNA Canopy Single Pole 4-Plug	Date:	9/19/2024
Fastening point:			

Specifier's comments:

1 Input data

Anchor type and diameter:	**Hex Head ASTM F 1554 GR. 36 1**
Item number:	not available
Specification text:	Hilti Hex Head headed stud anchor with 25 in embedment, 1, Steel galvanized, installation per instruction for use
Effective embedment depth:	h_{ef} = 25.000 in.
Material:	ASTM F 1554
Evaluation Service Report:	Hilti Technical Data
Issued I Valid:	- | -
Proof:	Design Method ACI 318-19 / CIP
Stand-off installation:	e_b = 0.000 in. (no stand-off); t = 0.500 in.
Anchor plate[R] :	l_x x l_y x t = 12.000 in. x 12.000 in. x 1.000 in.; (Recommended plate thickness: not calculated)
Profile:	Square HSS (AISC), HSS6X6X.375; (L x W x T) = 6.000 in. x 6.000 in. x 0.375 in.
Base material:	uncracked concrete, 2500, f_c' = 2,500 psi; h = 36.000 in.
Reinforcement:	tension: not present, shear: not present;
	edge reinforcement: none or < No. 4 bar

[R] - The anchor calculation is based on a rigid anchor plate assumption.

Geometry [in.] & Loading [lb, in.lb]

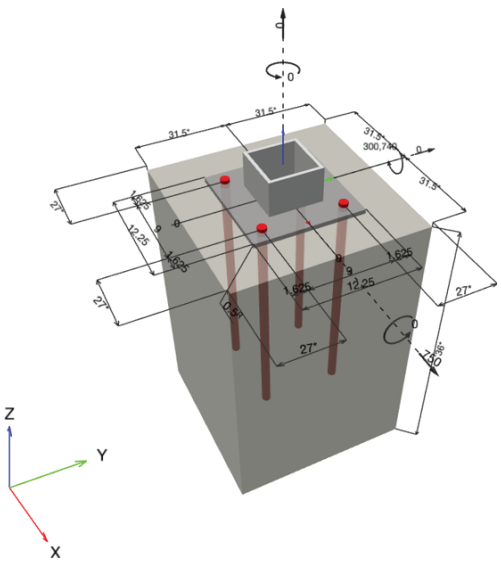

PROFIS Engineering (c) 2003-2024 Hilti AG, FL-9494 Schaan Hilti is a registered Trademark of Hilti AG, Schaan

Company:	Ross Bryan Associates	Page:	8
Address:		Specifier:	Jacob R. Holloway
Phone I Fax:	(615) 329-1300 |	E-Mail:	
Design:	iONNA Canopy Single Pole 4-Plug	Date:	9/19/2024
Fastening point:			

1.1 Design results

Case	Description	Forces [lb] / Moments [in.lb]	Seismic	Max. Util. Anchor [%]
1	Combination 1	N = 0; V_x = 750; V_y = 0; M_x = 0; M_y = 300,740; M_z = 0;	no	69

2 Load case/Resulting anchor forces

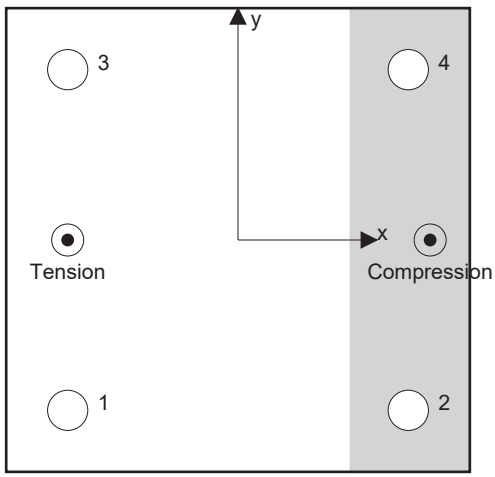

Anchor reactions [lb]

Tension force: (+Tension, -Compression)

Anchor	Tension force	Shear force	Shear force x	Shear force y
1	15,700	188	188	0
2	0	188	188	0
3	15,700	188	188	0
4	0	188	188	0

Max. concrete compressive strain:	0.37 [‰]
Max. concrete compressive stress:	1,631 [psi]
Resulting tension force in (x/y)=(-4.500/0.000):	31,400 [lb]
Resulting compression force in (x/y)=(5.078/0.000):	31,400 [lb]

Anchor forces are calculated based on the assumption of a rigid anchor plate.

3 Tension load

	Load N_{ua} [lb]	Capacity ϕ N_n [lb]	Utilization $\beta_N = N_{ua}/\phi$ N_n	Status
Steel Strength*	15,700	26,361	60	OK
Pullout Strength*	15,700	22,795	69	OK
Concrete Breakout Failure**	31,400	98,994	32	OK
Concrete Side-Face Blowout, direction **	N/A	N/A	N/A	N/A

* highest loaded anchor **anchor group (anchors in tension)

Input data and results must be checked for conformity with the existing conditions and for plausibility!
PROFIS Engineering (c) 2003-2024 Hilti AG, FL-9494 Schaan Hilti is a registered Trademark of Hilti AG, Schaan

Company:	Ross Bryan Associates	Page:	9
Address:		Specifier:	Jacob R. Holloway
Phone I Fax:	(615) 329-1300 |	E-Mail:	
Design:	iONNA Canopy Single Pole 4-Plug	Date:	9/19/2024
Fastening point:			

3.1 Steel Strength

$N_{sa} = A_{se,N} f_{uta}$ ACI 318-19 Eq. (17.6.1.2)

$\phi N_{sa} \geq N_{ua}$ ACI 318-19 Table 17.5.2

Variables

$A_{se,N}$ [in.^{2}]	f_{uta} [psi]
0.61	58,000

Calculations

N_{sa} [lb]
35,148

Results

N_{sa} [lb]	ϕ_{steel}	ϕN_{sa} [lb]	N_{ua} [lb]
35,148	0.750	26,361	15,700

3.2 Pullout Strength

$N_{pN} = \psi_{c,p} N_p$ ACI 318-19 Eq. (17.6.3.1)

$N_p = 8 A_{brg} f'_c$ ACI 318-19 Eq. (17.6.3.2.2a)

$\phi N_{pN} \geq N_{ua}$ ACI 318-19 Table 17.5.2

Variables

$\psi_{c,p}$	A_{brg} [in.^{2}]	λ_a	f'_c [psi]
1.400	1.16	1.000	2,500

Calculations

N_p [lb]
23,260

Results

N_{pn} [lb]	$\phi_{concrete}$	ϕN_{pn} [lb]	N_{ua} [lb]
32,564	0.700	22,795	15,700

PROFIS Engineering (c) 2003-2024 Hilti AG, FL-9494 Schaan Hilti is a registered Trademark of Hilti AG, Schaan

Company:	Ross Bryan Associates	Page:	10
Address:		Specifier:	Jacob R. Holloway
Phone I Fax:	(615) 329-1300 |	E-Mail:	
Design:	iONNA Canopy Single Pole 4-Plug	Date:	9/19/2024
Fastening point:			

3.3 Concrete Breakout Failure

$N_{cbg} = \left(\frac{A_{Nc}}{A_{Nc0}}\right) \psi_{ec,N}\ \psi_{ed,N}\ \psi_{c,N}\ \psi_{cp,N}\ N_b$ — ACI 318-19 Eq. (17.6.2.1b)

$\phi\ N_{cbg} \geq N_{ua}$ — ACI 318-19 Table 17.5.2

A_{Nc} see ACI 318-19, Section 17.6.2.1, Fig. R 17.6.2.1(b)

$A_{Nc0} = 9\ h_{ef}^2$ — ACI 318-19 Eq. (17.6.2.1.4)

$\psi_{ec,N} = \left(\frac{1}{1 + \frac{2\ e'_N}{3\ h_{ef}}}\right) \leq 1.0$ — ACI 318-19 Eq. (17.6.2.3.1)

$\psi_{ed,N} = 0.7 + 0.3\left(\frac{c_{a,min}}{1.5h_{ef}}\right) \leq 1.0$ — ACI 318-19 Eq. (17.6.2.4.1b)

$\psi_{cp,N} = \text{MAX}\left(\frac{c_{a,min}}{c_{ac}}, \frac{1.5h_{ef}}{c_{ac}}\right) \leq 1.0$ — ACI 318-19 Eq. (17.6.2.6.1b)

$N_b = 16\ \lambda_a\ \sqrt{f'_c}\ h_{ef}^{5/3}$ — ACI 318-19 Eq. (17.6.2.2.3)

Variables

h_{ef} [in.]	$e_{c1,N}$ [in.]	$e_{c2,N}$ [in.]	$c_{a,min}$ [in.]	$\psi_{c,N}$
24.000	0.000	0.000	27.000	1.250

c_{ac} [in.]	k_c	λ_a	f'_c [psi]
-	16	1.000	2,500

Calculations

A_{Nc} [in.^{2}]	A_{Nc0} [in.^{2}]	$\psi_{ec1,N}$	$\psi_{ec2,N}$	$\psi_{ed,N}$	$\psi_{cp,N}$	N_b [lb]
3,969.00	5,184.00	1.000	1.000	0.925	1.000	159,750

Results

N_{cbg} [lb]	$\phi_{concrete}$	$\phi\ N_{cbg}$ [lb]	N_{ua} [lb]
141,420	0.700	98,994	31,400

Input data and results must be checked for conformity with the existing conditions and for plausibility!
PROFIS Engineering (c) 2003-2024 Hilti AG, FL-9494 Schaan Hilti is a registered Trademark of Hilti AG, Schaan

4 Shear load

	Load V_{ua} [lb]	Capacity ϕ V_n [lb]	Utilization $\beta_V = V_{ua}/\phi$ V_n	Status
Steel Strength*	188	13,708	2	OK
Steel failure (with lever arm)*	N/A	N/A	N/A	N/A
Pryout Strength**	750	235,582	1	OK
Concrete edge failure in direction x+**	750	41,967	2	OK

* highest loaded anchor **anchor group (relevant anchors)

4.1 Steel Strength

$V_{sa} = 0.6\ A_{se,V}\ f_{uta}$ ACI 318-19 Eq. (17.7.1.2b)

$\phi\ V_{steel} \geq V_{ua}$ ACI 318-19 Table 17.5.2

Variables

$A_{se,V}$ [in.^{2}]	f_{uta} [psi]
0.61	58,000

Calculations

V_{sa} [lb]
21,089

Results

V_{sa} [lb]	ϕ_{steel}	ϕ V_{sa} [lb]	V_{ua} [lb]
21,089	0.650	13,708	188

PROFIS Engineering (c) 2003-2024 Hilti AG, FL-9494 Schaan Hilti is a registered Trademark of Hilti AG, Schaan

Company:	Ross Bryan Associates	Page:	12
Address:		Specifier:	Jacob R. Holloway
Phone I Fax:	(615) 329-1300 |	E-Mail:	
Design:	iONNA Canopy Single Pole 4-Plug	Date:	9/19/2024
Fastening point:			

4.2 Pryout Strength

$V_{cpg} = k_{cp} \left[\left(\frac{A_{Nc}}{A_{Nc0}} \right) \psi_{ec,N} \, \psi_{ed,N} \, \psi_{c,N} \, \psi_{cp,N} \, N_b \right]$ ACI 318-19 Eq. (17.7.3.1b)

$\phi \, V_{cpg} \geq V_{ua}$ ACI 318-19 Table 17.5.2

A_{Nc} see ACI 318-19, Section 17.6.2.1, Fig. R 17.6.2.1(b)

$A_{Nc0} = 9 \, h_{ef}^2$ ACI 318-19 Eq. (17.6.2.1.4)

$\psi_{ec,N} = \left(\frac{1}{1 + \frac{2 \, e_N'}{3 \, h_{ef}}} \right) \leq 1.0$ ACI 318-19 Eq. (17.6.2.3.1)

$\psi_{ed,N} = 0.7 + 0.3 \left(\frac{c_{a,min}}{1.5 h_{ef}} \right) \leq 1.0$ ACI 318-19 Eq. (17.6.2.4.1b)

$\psi_{cp,N} = \text{MAX}\left(\frac{c_{a,min}}{c_{ac}}, \frac{1.5 h_{ef}}{c_{ac}} \right) \leq 1.0$ ACI 318-19 Eq. (17.6.2.6.1b)

$N_b = 16 \, \lambda_a \sqrt{f_c'} \, h_{ef}^{5/3}$ ACI 318-19 Eq. (17.6.2.2.3)

Variables

k_{cp}	h_{ef} [in.]	$e_{c1,N}$ [in.]	$e_{c2,N}$ [in.]	$c_{a,min}$ [in.]
2	18.000	0.000	0.000	27.000

$\psi_{c,N}$	c_{ac} [in.]	k_c	λ_a	f_c' [psi]
1.250	∞	16	1.000	2,500

Calculations

A_{Nc} [in.^{2}]	A_{Nc0} [in.^{2}]	$\psi_{ec1,N}$	$\psi_{ec2,N}$	$\psi_{ed,N}$	$\psi_{cp,N}$	N_b [lb]
3,969.00	2,916.00	1.000	1.000	1.000	1.000	98,903

Results

V_{cpg} [lb]	$\phi_{concrete}$	$\phi \, V_{cpg}$ [lb]	V_{ua} [lb]
336,546	0.700	235,582	750

PROFIS Engineering (c) 2003-2024 Hilti AG, FL-9494 Schaan Hilti is a registered Trademark of Hilti AG, Schaan

4.3 Concrete edge failure in direction x+

$V_{cbg} = \left(\frac{A_{Vc}}{A_{Vc0}}\right) \psi_{ec,V}\ \psi_{ed,V}\ \psi_{c,V}\ \psi_{h,V}\ \psi_{parallel,V}\ V_b$ — ACI 318-19 Eq. (17.7.2.1b)

$\phi\ V_{cbg} \geq V_{ua}$ — ACI 318-19 Table 17.5.2

A_{Vc} see ACI 318-19, Section 17.7.2.1, Fig. R 17.7.2.1(b)

$A_{Vc0} = 4.5\ c_{a1}^2$ — ACI 318-19 Eq. (17.7.2.1.3)

$\psi_{ec,V} = \left(\frac{1}{1 + \frac{e_v'}{1.5c_{a1}}}\right) \leq 1.0$ — ACI 318-19 Eq. (17.7.2.3.1)

$\psi_{ed,V} = 0.7 + 0.3\left(\frac{c_{a2}}{1.5c_{a1}}\right) \leq 1.0$ — ACI 318-19 Eq. (17.7.2.4.1b)

$\psi_{h,V} = \sqrt{\frac{1.5c_{a1}}{h_a}} \geq 1.0$ — ACI 318-19 Eq. (17.7.2.6.1)

$V_b = 9\ \lambda_a\ \sqrt{f_c'}\ c_{a1}^{1.5}$ — ACI 318-19 Eq. (17.7.2.2.1b)

Variables

c_{a1} [in.]	c_{a2} [in.]	e_{cV} [in.]	$\psi_{c,V}$	h_a [in.]
24.000	27.000	0.000	1.400	36.000

l_e [in.]	λ_a	d_a [in.]	f_c' [psi]	$\psi_{parallel,V}$
8.000	1.000	1.000	2,500	1.000

Calculations

A_{Vc} [in.^{2}]	A_{Vc0} [in.^{2}]	$\psi_{ec,V}$	$\psi_{ed,V}$	$\psi_{h,V}$	V_b [lb]
2,268.00	2,592.00	1.000	0.925	1.000	52,909

Results

V_{cbg} [lb]	$\phi_{concrete}$	$\phi\ V_{cbg}$ [lb]	V_{ua} [lb]
59,952	0.700	41,967	750

5 Combined tension and shear loads, per ACI 318-19 section 17.8

β_N	β_V	ζ	Utilization $\beta_{N,V}$ [%]	Status
0.689	0.018	5/3	54	OK

$\beta_{NV} = \beta_N^{\zeta} + \beta_V^{\zeta} <= 1$

PROFIS Engineering (c) 2003-2024 Hilti AG, FL-9494 Schaan Hilti is a registered Trademark of Hilti AG, Schaan

Company:	Ross Bryan Associates	Page:	14
Address:		Specifier:	Jacob R. Holloway
Phone I Fax:	(615) 329-1300 |	E-Mail:	
Design:	iONNA Canopy Single Pole 4-Plug	Date:	9/19/2024
Fastening point:			

6 Warnings

- The anchor design methods in PROFIS Engineering require rigid anchor plates per current regulations (AS 5216:2021, ETAG 001/Annex C, EOTA TR029 etc.). This means load re-distribution on the anchors due to elastic deformations of the anchor plate are not considered - the anchor plate is assumed to be sufficiently stiff, in order not to be deformed when subjected to the design loading. PROFIS Engineering calculates the minimum required anchor plate thickness with CBFEM to limit the stress of the anchor plate based on the assumptions explained above. The proof if the rigid anchor plate assumption is valid is not carried out by PROFIS Engineering. Input data and results must be checked for agreement with the existing conditions and for plausibility!
- Condition A applies where the potential concrete failure surfaces are crossed by supplementary reinforcement proportioned to tie the potential concrete failure prism into the structural member. Condition B applies where such supplementary reinforcement is not provided, or where pullout or pryout strength governs.
- For additional information about ACI 318 strength design provisions, please go to https://submittals.us.hilti.com/PROFISAnchorDesignGuide/

Fastening meets the design criteria!

PROFIS Engineering (c) 2003-2024 Hilti AG, FL-9494 Schaan Hilti is a registered Trademark of Hilti AG, Schaan

7 Installation data

Profile: Square HSS (AISC), HSS6X6X.375; (L x W x T) = 6.000 in. x 6.000 in. x 0.375 in.

Hole diameter in the fixture: d_f = 1.062 in.

Plate thickness (input): 1.000 in.

Recommended plate thickness: not calculated

Anchor type and diameter: Hex Head ASTM F 1554 GR. 36 1

Item number: not available

Maximum installation torque: -

Hole diameter in the base material: - in.

Hole depth in the base material: 25.000 in.

Minimum thickness of the base material: 26.172 in.

Hilti Hex Head headed stud anchor with 25 in embedment, 1, Steel galvanized, installation per instruction for use

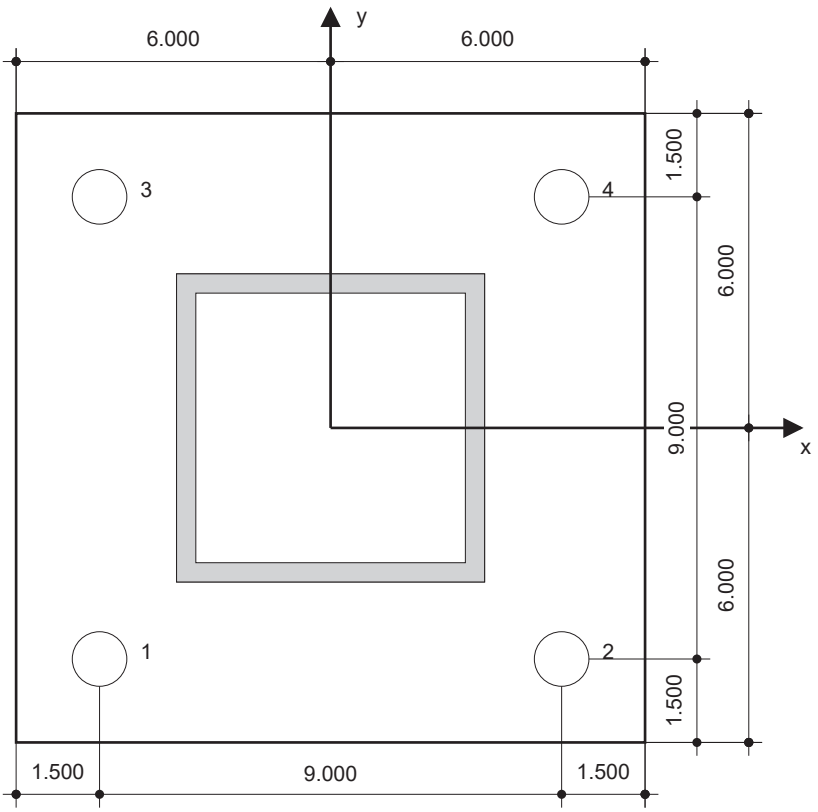

Coordinates Anchor [in.]

Anchor	x	y	c_{-x}	c_{+x}	c_{-y}	c_{+y}
1	-4.500	-4.500	27.000	36.000	27.000	36.000
2	4.500	-4.500	36.000	27.000	27.000	36.000
3	-4.500	4.500	27.000	36.000	36.000	27.000
4	4.500	4.500	36.000	27.000	36.000	27.000

Input data and results must be checked for conformity with the existing conditions and for plausibility!
PROFIS Engineering (c) 2003-2024 Hilti AG, FL-9494 Schaan Hilti is a registered Trademark of Hilti AG, Schaan

Docusign Envelope ID: 1C4F2B64-D77B-41F4-BC3F-6BCF8F1E1FE7

8 Remarks; Your Cooperation Duties

- Any and all information and data contained in the Software concern solely the use of Hilti products and are based on the principles, formulas and security regulations in accordance with Hilti's technical directions and operating, mounting and assembly instructions, etc., that must be strictly complied with by the user. All figures contained therein are average figures, and therefore use-specific tests are to be conducted prior to using the relevant Hilti product. The results of the calculations carried out by means of the Software are based essentially on the data you put in. Therefore, you bear the sole responsibility for the absence of errors, the completeness and the relevance of the data to be put in by you. Moreover, you bear sole responsibility for having the results of the calculation checked and cleared by an expert, particularly with regard to compliance with applicable norms and permits, prior to using them for your specific facility. The Software serves only as an aid to interpret norms and permits without any guarantee as to the absence of errors, the correctness and the relevance of the results or suitability for a specific application.
- You must take all necessary and reasonable steps to prevent or limit damage caused by the Software. In particular, you must arrange for the regular backup of programs and data and, if applicable, carry out the updates of the Software offered by Hilti on a regular basis. If you do not use the AutoUpdate function of the Software, you must ensure that you are using the current and thus up-to-date version of the Software in each case by carrying out manual updates via the Hilti Website. Hilti will not be liable for consequences, such as the recovery of lost or damaged data or programs, arising from a culpable breach of duty by you.

PROFIS Engineering (c) 2003-2024 Hilti AG, FL-9494 Schaan Hilti is a registered Trademark of Hilti AG, Schaan

Docusign Envelope ID: 1C4F2B64-D77B-41F4-BC3F-6BCF8F1E1FE7

iONNA CANOPY CONCEPT

RBA Structural Engineering, LLC
Engineers
1 Vantage Way, Suite B400 Nashville TN 37228

DESIGNED IN
ACCORDANCE WITH
2021 INTERNATIONAL
BUILDING CODE
ASCE 7-16

"SEALED FOR STRUCTURAL COMPONENTS ONLY"
It is unlawful to alter this document as sealed by a professional engineer.

PROJECT MANAGER

DESIGN SPECIALIST
BEN WEIENETH

SHEET INDEX

C01	COVER
P01	PLANS
E01	ELEVATIONS
S01	SECTIONS
D01	DETAILS

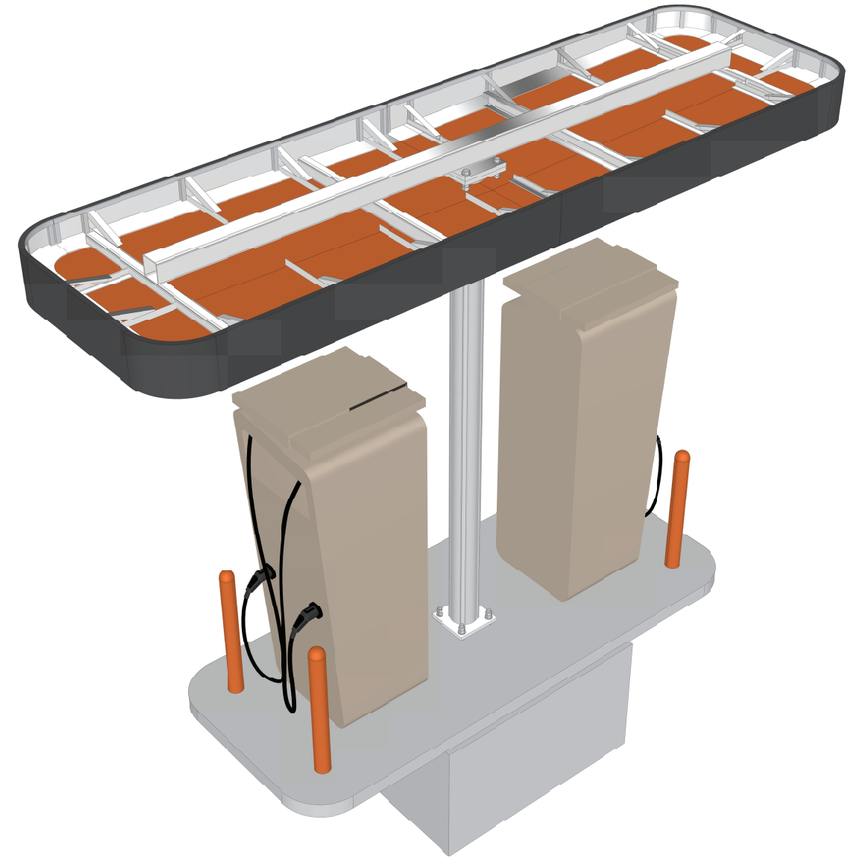

APPROVAL

NAME

ORGANIZATION

TITLE

- ☐ APPROVED
- ☐ APPROVED AS NOTED
- ☐ REVISE & RESUBMIT

NOTES:

OTHER MATERIALS

- ☐ PLYWOOD (3/4" CDX)
- ☐ VAPROSHIELD - IT / SA
- ☐ SHEET METAL (TRIM)
- ☐ NON STD. SCREW
- ☐ SIGNAGE
- ☐ OTHER - SEE NOTES

GENERAL NOTES:

1. MATERIALS: STEEL HSS – ASTM A500 GR. C; STEEL CHANNELS, PLATES, AND ANGLES – ASTM A36.
2. ALL EXPOSED STRUCTURAL STEEL TO BE GALVANIZED.
3. BOLTED CONNECTIONS WITHIN STEEL STRUCTURE TO CONSIST OF ASTM A325 OR ASTM A449 BOLTS, ASTM A563 NUTS, AND ASTM F436 HARDENED WASHERS AT FAYING SURFACES, UNLESS NOTED OTHERWISE. BOLTS TO BE FULLY PRETENSIONED TO 70% MINIMUM TENSILE STRENGTH PER AISC SPECIFICATIONS. VERIFY PRETENSION THROUGH USE OF DIRECT-TENSION INDICATORS OR TWIST-OFF TYPE TENSION CONTROL BOLTS.
4. ANCHOR BOLTS TO CONSIST OF ASTM F1554 GR. 36 OR ASTM A36 THREADED RODS, ASTM A563 NUTS, AND ASTM F436 HARDENED WASHERS AT FAYING SURFACES, UNLESS NOTED OTHERWISE. ALL ANCHOR BOLTS TO BE DOUBLE-NUTTED.
5. ALL EXPOSED HARDWARE TO BE GALVANIZED.
6. ALL STEEL WELDS TO BE COMPLETED PER AWS D1.1 REQUIREMENTS USING E-70 SERIES ELECTRODES. ALL WELDMENTS TO BE FREE OF WELD SPLATTER, SLAG, AND ARCING.
7. REMOVE ALL SHARP EDGES & BURRS.
8. PROVIDE NEOPRENE OR RUBBER ISOLATION BARRIERS BETWEEN ALL DISSIMILAR METALS.

STATE OF NEW HAMPSHIRE
BRENT QUALLS
No. 16740
LICENSED
PROFESSIONAL ENGINEER
09/24/2024

AGI
Architectural Branding - Atlanta
218 River Drive
Cartersville, GA 30120
800-877-7868
www.AGI.net

PROJECT
iONNA CANOPY CONCEPT

...

ARCHITECT
...

DRAWN BY
BJW

JOB #
...

DATE
9/19/24

REV #	DATE	COMMENTS
1	...	...

This document is the sole property of AGI, and all design, manufacturing, reproduction, use and sale rights regarding the same are expressly forbidden. It is submitted under a confidential relationship, for a special purpose, and the recipient, by accepting this document assumes custody and agrees that this document will not be copied or reproduced in whole or in part, nor its contents revealed in any manner or to any person except for the purpose for which it was tendered, nor any special features peculiar to this design be incorporated in other projects.

Approved By

Date Approved

SHEET NUMBER
1 of 5

SHEET NUMBER
C01

T:\CORPORATE IMAGE Newch\DEVELOPMENT\iONNA Canopy\Design Documents\Current Models\iONNA Canopy - Single Post 4 Pkg.3dm page 1 of 5 printed 9/19/2024 11:18 last saved 9/19/2024 11:16

Docusign Envelope ID: 1C4F2B64-D77B-41F4-BC3F-6BCF8F1E1FE7

RBA Structural Engineering, LLC
Engineers
1 Vantage Way, Suite B400 Nashville TN 37228

DESIGNED IN
ACCORDANCE WITH
2021 INTERNATIONAL
BUILDING CODE
ASCE 7-16

"SEALED FOR STRUCTURAL COMPONENTS ONLY"
It is unlawful to alter this document as sealed by a professional engineer.

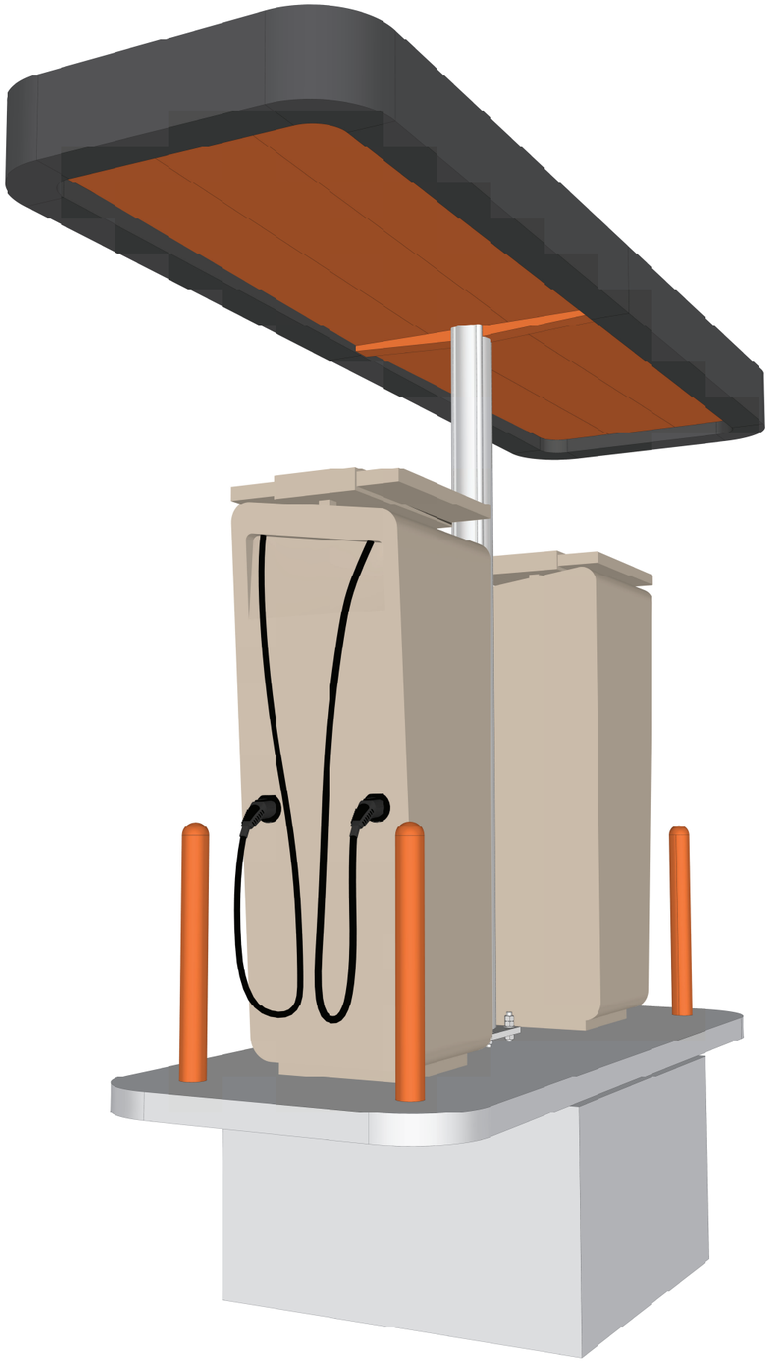

1 / P01 PERSPECTIVE VEIW
REF: NTS

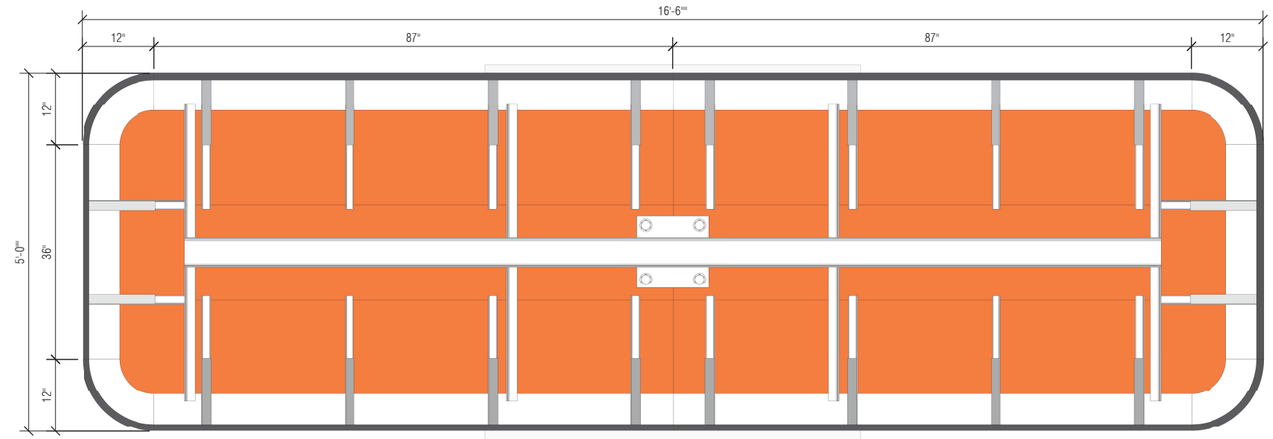

2 / P01 TOP VIEW
REF: 1" = 1'-0"

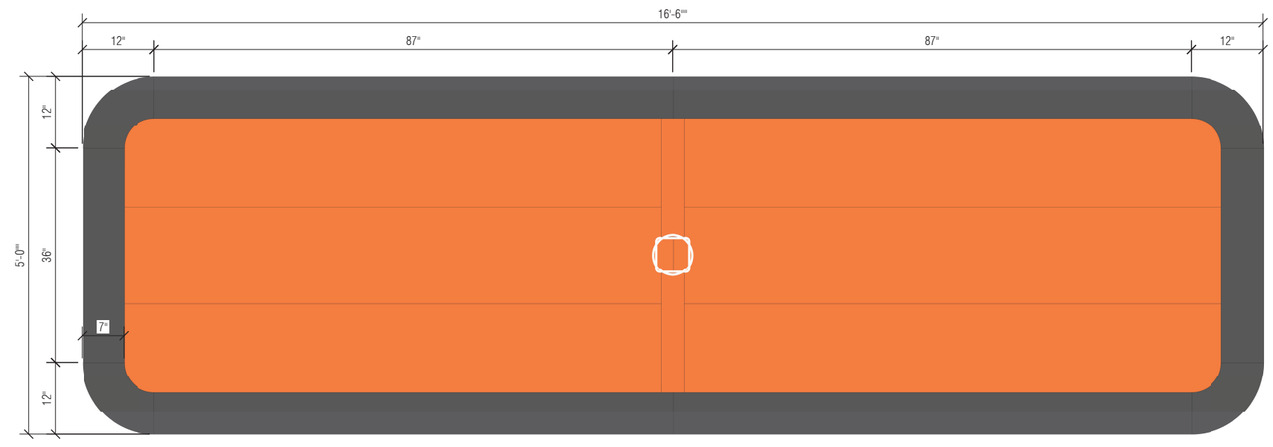

3 / P01 REFLECTED CEILING PLAN
REF: 1" = 1'-0"

STATE OF NEW HAMPSHIRE
JOHN E. QUALLS
QUALLS
No.16740
LICENSED
PROFESSIONAL ENGINEER
09/24/2024

AGI

Architectural Branding - Atlanta

218 River Drive
Cartersville, GA 30120
800-877-7868
www.AGI.net

PROJECT
iONNA CANOPY CONCEPT

...

ARCHITECT
...

DRAWN BY
BJW

JOB #
...

DATE
9/19/24

REV #	DATE	COMMENTS
1	...	...

This document is the sole property of AGI, and all design, manufacturing, reproduction, use and sale rights regarding the same are expressly forbidden. It is submitted under a confidential relationship, for a special purpose, and the recipient, by accepting this document assumes custody and agrees that this document will not be copied or reproduced in whole or in part, nor its contents revealed in any manner or to any person except for the purpose for which it was tendered, nor any special features peculiar to this design be incorporated in other projects.

Approved By

Date Approved

SHEET NUMBER
2 of 5

SHEET NUMBER
P01

T:\CORPORATE IMAGE New\HUDEVELOPMENT\IONNA Canopy\Design Documents\Current Models\IONNA Canopy - Single Pole & Plug 3dm page 2 of 5 printed 9/19/2024 11:18 last saved 9/19/2024 11:16

Docusign Envelope ID: 1C4F2B64-D77B-41F4-BC3F-6BCF8F1E1FE7

RBA Structural Engineering, LLC
Engineers
1 Vantage Way, Suite B400 Nashville TN 37228

DESIGNED IN
ACCORDANCE WITH
2021 INTERNATIONAL
BUILDING CODE
ASCE 7-16

"SEALED FOR STRUCTURAL COMPONENTS ONLY"
It is unlawful to alter this document as sealed by a professional engineer.

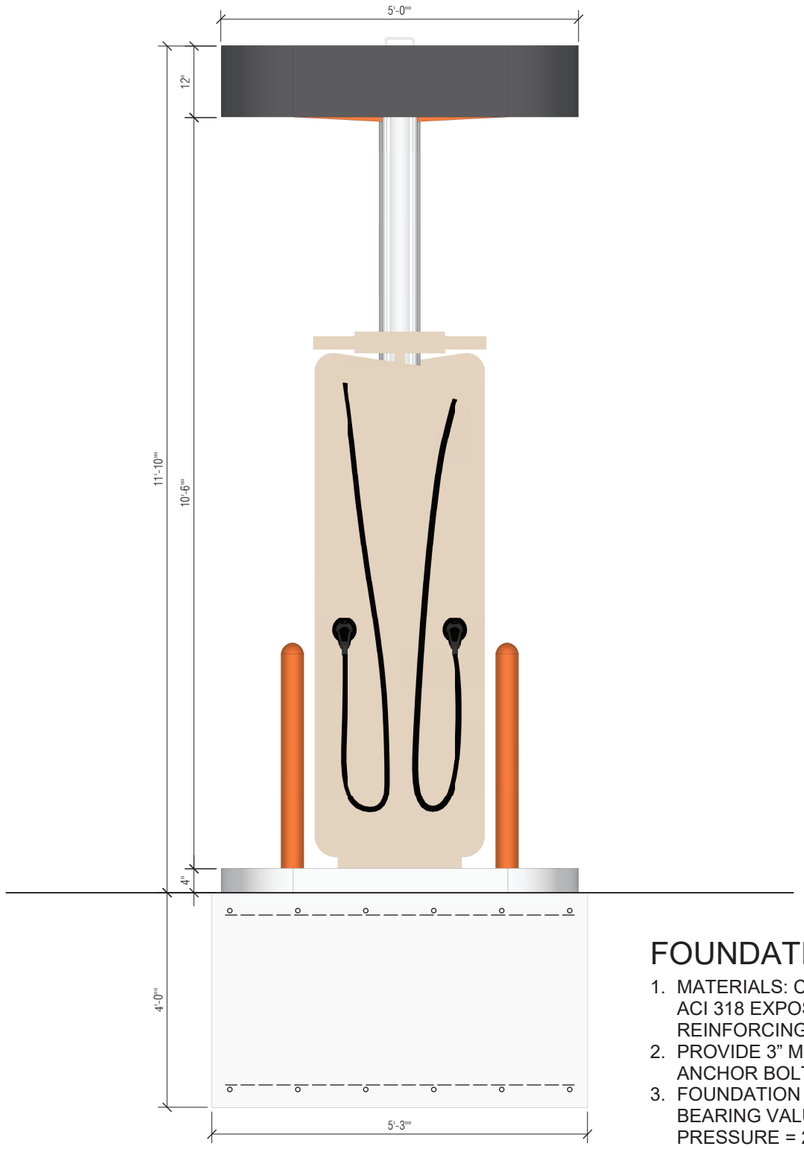

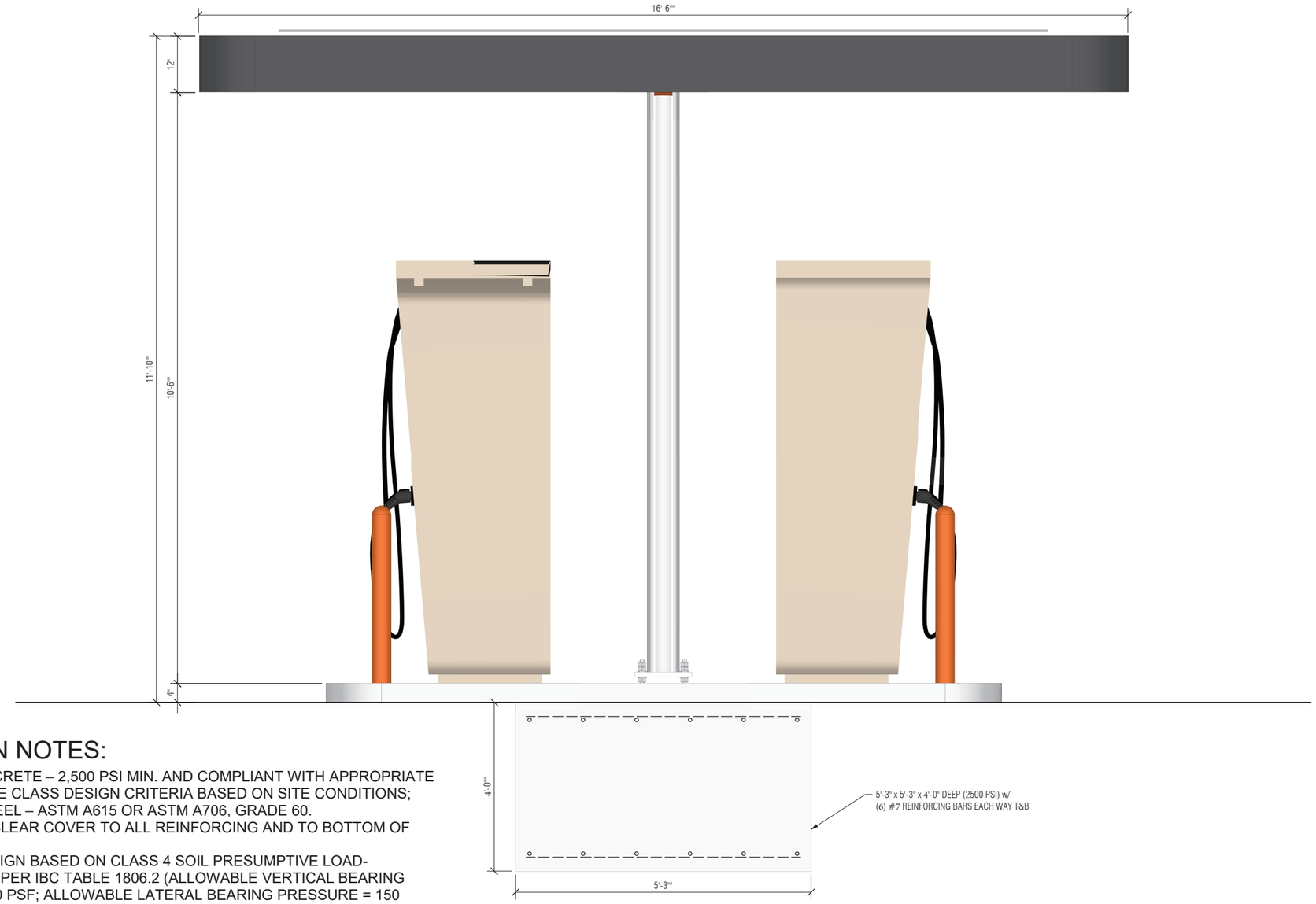

FOUNDATION NOTES:

1. MATERIALS: CONCRETE – 2,500 PSI MIN. AND COMPLIANT WITH APPROPRIATE ACI 318 EXPOSURE CLASS DESIGN CRITERIA BASED ON SITE CONDITIONS; REINFORCING STEEL – ASTM A615 OR ASTM A706, GRADE 60.
2. PROVIDE 3" MIN. CLEAR COVER TO ALL REINFORCING AND TO BOTTOM OF ANCHOR BOLTS.
3. FOUNDATION DESIGN BASED ON CLASS 4 SOIL PRESUMPTIVE LOAD-BEARING VALUES PER IBC TABLE 1806.2 (ALLOWABLE VERTICAL BEARING PRESSURE = 2,000 PSF; ALLOWABLE LATERAL BEARING PRESSURE = 150 PSF/FT). ACTUAL SOIL CONDITIONS TO BE VERIFIED IN FIELD.

STATE OF NEW HAMPSHIRE
STEVEN PAUL QUALLS
No. 16740
LICENSED PROFESSIONAL ENGINEER
09/24/2024

1 / E01 END VIEW
REF: 1" = 1'-0"

2 / E01 SIDE VIEW
REF: 1" = 1'-0"

AGI
Architectural Branding - Atlanta
218 River Drive
Cartersville, GA 30120
800-877-7868
www.AGI.net

PROJECT
iONNA CANOPY CONCEPT

...

ARCHITECT
...

DRAWN BY
BJW

JOB #
...

DATE
9/19/24

REV #	DATE	COMMENTS
1	...	...

This document is the sole property of AGI, and all design, manufacturing, reproduction, use and sale rights regarding the same are expressly forbidden. It is submitted under a confidential relationship, for a special purpose, and the recipient, by accepting this document assumes custody and agrees that this document will not be copied or reproduced in whole or in part, nor its contents revealed in any manner or to any person except for the purpose for which it was tendered, nor any special features peculiar to this design be incorporated in other projects.

Approved By

Date Approved

SHEET NUMBER
3 of 5

SHEET NUMBER
E01

T:\CORPORATE IMAGE New\NDEVELOPMENT\IONNA Canopy\Design Documents\Current Models\IONNA Canopy - Single Pole & Plug 30in. page 3 of 5 printed 9/19/2024 11:19 last saved 9/19/2024 11:16

Docusign Envelope ID: 1C4F2B64-D77B-41F4-BC3F-6BCF8F1E1FE7

RBA Structural Engineering, LLC
Engineers
1 Vantage Way, Suite B400 Nashville TN 37228

DESIGNED IN
ACCORDANCE WITH
2021 INTERNATIONAL
BUILDING CODE
ASCE 7-16

"SEALED FOR STRUCTURAL COMPONENTS ONLY"
It is unlawful to alter this document as sealed by a professional engineer.

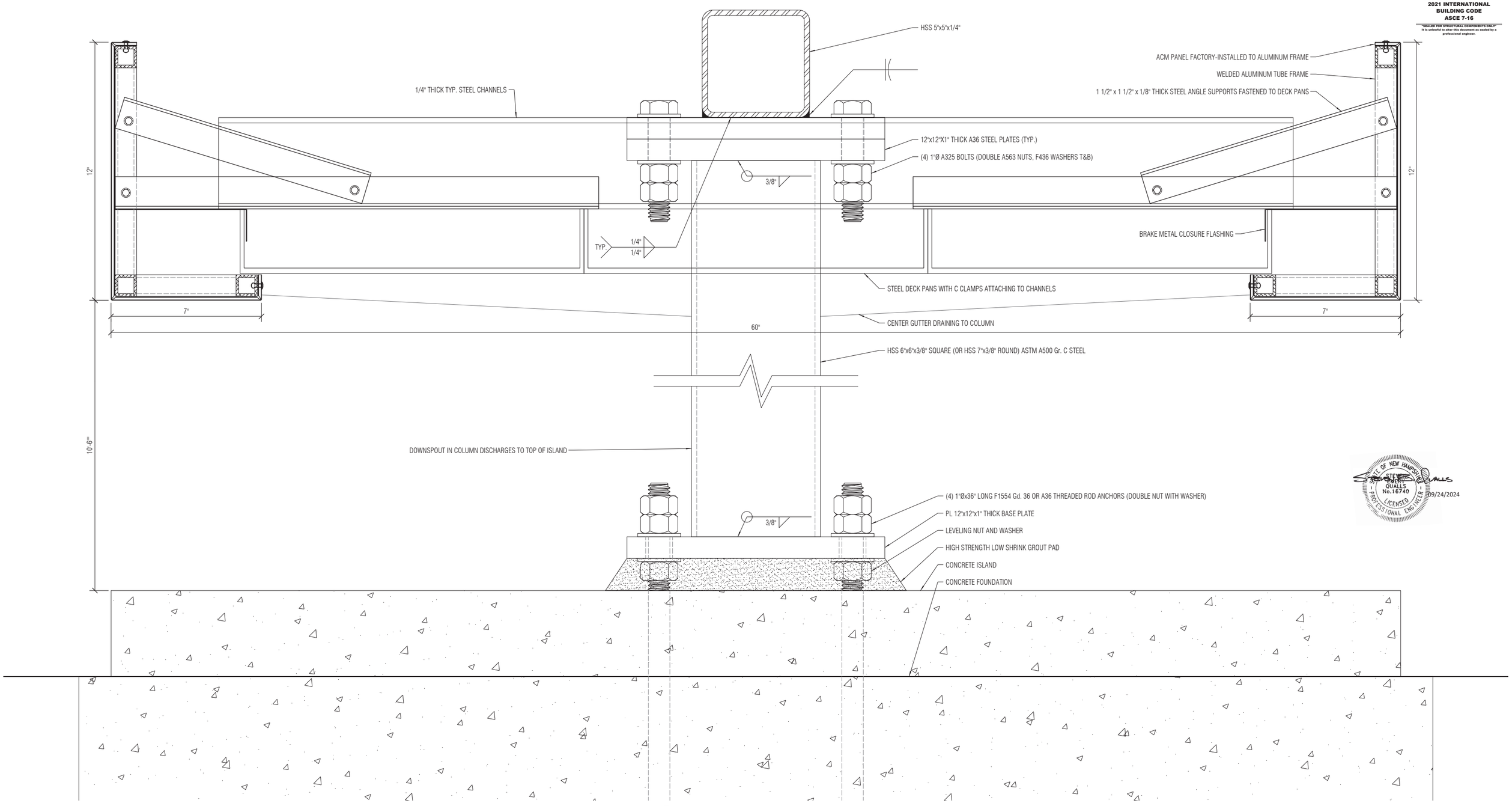

STATE OF NEW HAMPSHIRE
EMILY QUALLS
No.16740
LICENSED
PROFESSIONAL ENGINEER
09/24/2024

1 / S01 CANOPY SECTION
REF:
6" = 1'-0"

Architectural Branding - Atlanta

218 River Drive
Cartersville, GA 30120
800-877-7868
www.AGI.net

PROJECT
iONNA CANOPY CONCEPT

...

ARCHITECT
...

DRAWN BY
BJW

JOB #
...

DATE
9/19/24

REV #	DATE	COMMENTS
1	...	...

This document is the sole property of AGI, and all design, manufacturing, reproduction, use and sale rights regarding the same are expressly forbidden. It is submitted under a confidential relationship, for a special purpose, and the recipient, by accepting this document assumes custody and agrees that this document will not be copied or reproduced in whole or in part, nor its contents revealed in any manner or to any person except for the purpose for which it was tendered, nor any special features peculiar to this design be incorporated in other projects.

Approved By
Date Approved

SHEET NUMBER
4 of 5

SHEET NUMBER
S01

T:\CORPORATE IMAGE Nashville\DEVELOPMENT\IONNA Canopy\Design Documents\Current Models\IONNA Canopy - Single Pole 4 Rug.3dm page 4 of 5 printed 9/19/2024 11:19 last saved 9/18/2024 11:16

Docusign Envelope ID: 1C4F2B64-D77B-41F4-BC3F-6BCF8F1E1FE7

RBA Structural Engineering, LLC
Engineers
1 Vantage Way, Suite B400 Nashville TN 37228

DESIGNED IN
ACCORDANCE WITH
2021 INTERNATIONAL
BUILDING CODE
ASCE 7-16

"SEALED FOR STRUCTURAL COMPONENTS ONLY"
It is unlawful to alter this document as sealed by a professional engineer.

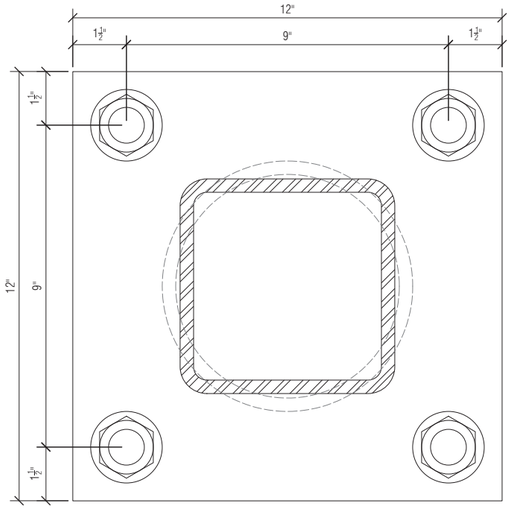

1 / D01 COLUMN BASE DETAIL
REF: 6" = 1'-0"

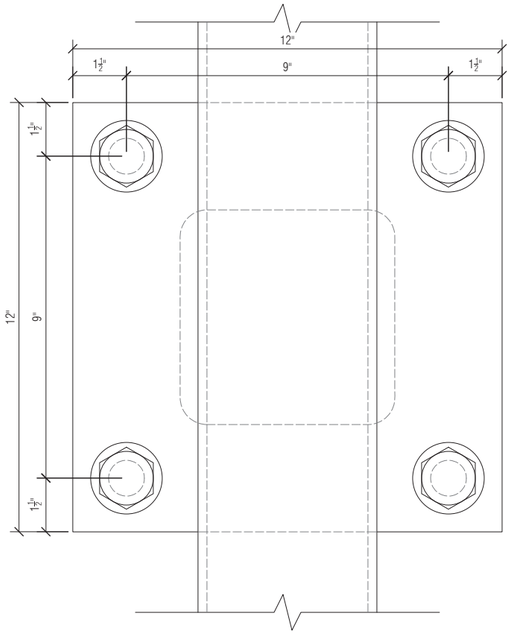

2 / D01 MAIN BEAM TO COLUMN CONNECTION DETAIL
REF: 6" = 1'-0"

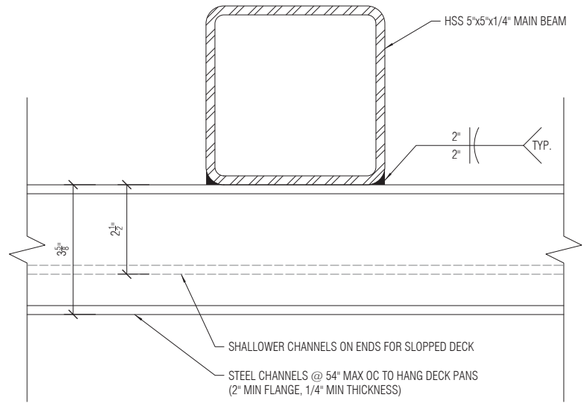

3 / D01 CHANNEL TO MAIN BEAM CONNECTION DETAIL
REF: 6" = 1'-0"

STATE OF NEW HAMPSHIRE
CHERY QUALLS
No.16740
LICENSED
PROFESSIONAL ENGINEER
09/24/2024

Architectural Branding - Atlanta

218 River Drive
Cartersville, GA 30120
800-877-7868
www.AGI.net

PROJECT
iONNA CANOPY CONCEPT

...

ARCHITECT
...

DRAWN BY
BJW

JOB #
...

DATE
9/19/24

REV #	DATE	COMMENTS
1	...	...

This document is the sole property of AGI, and all design, manufacturing, reproduction, use and sale rights regarding the same are expressly forbidden. It is submitted under a confidential relationship, for a special purpose, and the recipient, by accepting this document assumes custody and agrees that this document will not be copied or reproduced in whole or in part, nor its contents revealed in any manner or to any person except for the purpose for which it was tendered, nor any special features peculiar to this design be incorporated in other projects.

Approved By

Date Approved

SHEET NUMBER
5 of 5

SHEET NUMBER
D01

T:\CORPORATE IMAGE New\NDEVELOPMENT\IONNA Canopy\Design Documents\Current Models\IONNA Canopy - Single Pole 4 Plug 30in. page 5 of 5 - posted 9/19/2024 11:19 last saved 9/19/2024 11:16

iONNA Single Pole 4-Plug Canopy
1600 Woodbury Avenue
Portsmouth, NH 03801

RBA Job No. 24 45149

CALCULATIONS FOR:
Standalone Canopy

Designed in accordance with:
2021 International Building Code / New Hampshire Building Code
ASCE 7-16
Wind Velocity = 125 mph
Risk Category II

STATE OF NEW HAMPSHIRE
STEVEN EMERY QUALLS
No.16740
LICENSED
PROFESSIONAL ENGINEER

09/24/2024

FABRICATOR
Architectural Graphics, Inc.
2655 International Parkway
Virginia Beach, Virginia 23452

DESIGN ENGINEER
RBA Structural Engineering, LLC
1 Vantage Way, Suite B-400
Nashville, Tennessee 37228

SUBJECT DONNA CANOPY SINGLE POLE 4-PLUG	RBA STRUCTURAL ENGINEERING, LLC A Subsidiary of Ross Bryan Associates, Inc.	SHEET NO. 1 OF 16
FOR ARI BY JRH		JOB NO. 24 45149
		DATE 9/19/24

CANOPY LOADS:

2021 INTERNATIONAL BUILDING CODE ; ASCE 7-16

DEAD LOADS: DECK PANS + FASCIA PANELS : 5 PSF MAX.

STEEL CHANNELS: 9 PLF MAX

HSS 5"x5"x1/4" = 15.62 PLF

COLUMN: 27.48 PLF MAX

SNOW LOAD:

$P_g = 50$ PSF

$P_f = 0.7 C_e C_t I_s P_g = (0.7)(1.1)(1.2)(1.0)(50 PSF) = 46.2$ PSF

$C_e \leq 1.1$

$C_t \leq 1.2$

$I_s = 1.0$

$\gamma = 0.13 P_g + 14 = (0.13)(50 PSF) + 14 = 20.5$ PCF

46.2 PSF / 20.5 PCF = 2.25' EXCEEDS 1'-0" CANOPY HEIGHT ∴ NO DRIFT LOADING

$P_m = 20 I_s = (20)(1.0) = 20$ PSF < 46.2 PSF ⇒ USE P_g

WIND LOAD:

$V \leq 125$ MPH

$q_z = 0.00256 K_z K_{zt} K_d V^2 = 28.90$ PSF

$K_z = 0.85$ (EXP C, $h \leq 11'-10"$)

$K_{zt} = 1.0$

$K_d = 0.85$

VERTICAL WIND:

$P = q_h G C_N = \pm 29.48$ PSF (ULT.)

$G = 0.85$

$C_N = \pm 1.2$ (MAX VALUES)

SERVICE LOADS:

$D + S = 5$ PSF + 46.2 PSF = 51.2 PSF

$D + 0.6W = 5$ PSF + (0.6)(29.48 PSF) = 22.7 PSF

$D + 0.75S + 0.75(0.6W) = 5$ PSF + (0.75)(46.2 PSF) + (0.75)(0.6)(29.48 PSF) = 53.0 PSF (CONTROLS)

HORIZONTAL WIND LOADS: SEE SHEET 2

CODES:

Wind Loads per provisions of ASCE 7-16, Chapter 29

SIGN DIMENSIONS:

Length, B = **5.00** ft. Height, s = **1.00** ft. OAH Above Grade, h = **11.83** ft.

Depth, t = **16.50** ft. A_{sign} = **5.0** ft^2 Ground Elevation, z_g = **0** ft.

WIND LOADS:

Natural Frequency = **1** **RIGID STRUCTURE**

Exposure Category = **C** Risk Category = **II**

$q_h = 0.00256 * K_z * K_{zt} * K_d * K_e * V^2$ Velocity Pressure, ASCE 7-16, Section 26.10.2

K_z = 0.85 Velocity Pressure Exposure Coefficient, ASCE 7-16, Table 26.10-1

K_{zt} = 1.0 Topographic Factor, ASCE 7-16, Section 26.8.2

K_d = 0.85 Wind Directionality Factor, ASCE 7-16, Table 26.6-1

K_e = 1.00 Ground Elevation Factor, ASCE 7-16, Table 26.9-1

V = **125** Basic Wind Speed, mph, ASCE 7-16, Figure 26.5-1B

q_h = 28.86 lb/ft^2

$F/A = q_h * G * C_f$ Design Wind Loads, ASCE 7-16, Section 29.3.1

G = 0.85 Gust Effect Factor, ASCE 7-16, Section 26.11

B/s = 5.00 Length of Sign/Depth of Sign

s/h = 0.08 Depth of Sign/Overall Height

C_f = 1.85 Force Coefficient, ASCE 7-16, Figure 29.3-1

F/A = 45.39 lb/ft^2

CASE A: resultant acts normal to sign face through the geometric center

CASE B: resultant acts normal to sign face at a distance from the geometric center toward the windward edge equal to 1.00'

CASE C loading applies

LRFD Loading:

Use wind pressure = 45.39 lb/ft^2 for 1.0*W from ASCE 7-16, Section 2.3.1

ASD Loading:

Use wind pressure = 27.23 lb/ft^2 for 0.6*W from ASCE 7-16, Section 2.4.1

SUBJECT IONNA CANOPY SINGLE POLE 4-PLUG	RBA STRUCTURAL ENGINEERING, LLC A Subsidiary of Ross Bryan Associates, Inc.	SHEET NO. 3 OF 16
FOR AGI BY JRH		JOB NO. 24 45149
		DATE 9/19/24

CANOPY CHANNELS:

@ 54" MAX O.C.

$W \leq (53.0\ PSF)(54"/12"/_{1}) + 9\ PLF = 248\ PLF$

$L_{CANT} \leq 5'\text{-}0"/2 = 2'\text{-}6"$

$M \leq \frac{(248\ PLF)(2'\text{-}6")^2}{2} = 775\ \#'$

@ MIN. 3" DEEP × 2" WIDE × 1/4": $Z_x = 1.765\ IN^3$

$M_{ALL} \geq \frac{(36000\ PSI)(1.765\ IN^3)}{(12"/_{1})(1.67)} = 3170\ \#' > 775\ \#'$ OK

$P @ BEAM = \frac{(248\ PLF)(5'\text{-}0")}{2} = 620\ \#$ EA. SIDE

@ 2" LONG FLARE-BEVEL TO BEAM:

$\frac{R_{nw}}{\Omega} = \frac{(0.60)(70000\ PSI)(5/8)(1/4")(2")}{2.0} = 6562\ \# > 620\ \#$ OK

MAIN BEAM:

$W \leq (53\ PSF)(5'\text{-}0") + \frac{(9\ PLF)(5'\text{-}0")(4)}{16'\text{-}6"} + 15.62\ PLF = 292\ PLF$

$L_{CANT} \leq 16'\text{-}6"/2 = 8'\text{-}3"$

$M \leq \frac{(292\ PLF)(8'\text{-}3")^2}{2} = 9937\ \#'$

$M_{ALL} \geq 17500\ \#' > 9937\ \#'$ OK

$W_D = (5\ PSF)(5'\text{-}0") + \frac{(9\ PLF)(5'\text{-}0")(4)}{16'\text{-}6"} + 15.62\ PLF = 51.6\ PLF$

DEFLECTION:

$I = 16.0\ IN^4$

$\delta_{DEAD} \simeq \frac{(51.6\ PLF/12"/_{1})(99")^4}{(8)(29{,}000{,}000\ PSI)(16.0\ IN^4)} = 0.111"$

$\sim L/1780$ OK

$\delta_{TOTAL} \simeq \frac{(292\ PLF/12"/_{1})(99")^4}{(8)(29{,}000{,}000\ PSI)(16.0\ IN^4)} = 0.630"$

$\sim L/314 < L/240$ OK

WELD @ R: $S_W = (12")^2/3 \times 5/8 \times 1/4" = 7.5\ IN^3$

$M_{ALL} \geq \frac{(0.60)(70000\ PSI)(7.5\ IN^3)}{(12"/_{1})(2.0)} = 13125\ \#' > 9937\ \#'$ OK

MATCH PLATE:

$M \le 9937^{\#'}$

$P \le (292\ PLF)(16'\text{-}6") = 4818^{\#}$

$T_b \le \frac{(9937^{\#'})(12"/')}{(9")(2\ BOLTS)} = 6625^{\#}/BOLT$

@ 1" A325:

$\frac{R_n}{\Omega} \ge \frac{\mu D_u h_f T_b n_s}{1.50} = 7684^{\#} > 6625^{\#}$ OK

$\mu \ge 0.20$

$D_u = 1.13$

$h_f = 1.0$

$T_b \ge 51000^{\#}$

$n_s = 1.0$

$M_{PL} \le (2)(6625^{\#})(2.5") = 33125^{\#"}$

$t_{MIN} = \sqrt{\frac{(4)(33125^{\#"})}{(36000\ PSI/1.67)(12")}} = 0.716" < 1"$ OK

COLUMN:

CONSIDER ONLY 1 CANOPY SIDE LOADED FOR MOMENT (CONSERVATIVE)

$M_{TOP} \le 9937^{\#'}$

$P_{D,TOP} \le 4818^{\#}$

$P_{L,TOP} \le (16'\text{-}6")(1'\text{-}0")(27.27\ PSF) = 450^{\#}$

$M_{TOTAL} \le 9937^{\#'} + (450^{\#})(11'\text{-}4") = 15037^{\#'}$

$P_{TOTAL} \le 4818^{\#} + (27.48\ PLF)(11') = 5120^{\#}$

$M_{ALL} \ge 32400^{\#'} > 15037^{\#'}$ OK

$P_{ALL} \ge 78600^{\#} > 5120^{\#}$ OK

$\frac{5120^{\#}}{78600^{\#}} + \frac{8}{9}\left(\frac{15037^{\#'}}{32400^{\#'}}\right) = 0.478 < 1.0$ OK

WELD: $S_W \ge \frac{(\pi)(7" + 3/8")^2}{4}(0.707)(3/8") = 11.32\ IN^3$

$M_{ALL} \ge \frac{(0.60)(70000\ PSI)(11.32\ IN^3)}{(12"/')(2.0)} = 19820^{\#'} > 15037^{\#'}$ OK (TOP & BOTTOM)

BASE PLATE:

$T_b \le \frac{(15037^{\#'})(12"/')}{(9")(2\ ANCHORS)} = 10025^{\#}$

$M_{PL} \le (2)(10025^{\#})(2.1") = 42104^{\#"}$

$t_{MIN} = \sqrt{\frac{(4)(42104^{\#"})}{(36000\ PSI/1.67)(12")}} = 0.807" < 1"$ OK

SUBJECT: IONNA CANOPY SINGLE POLE 4-PLUG	RBA STRUCTURAL ENGINEERING, LLC A Subsidiary of Ross Bryan Associates, Inc.	SHEET NO. 5 OF 16
FOR: AGI BY: JRH		JOB NO. 24 45149
		DATE 9/19/24

UPLIFT CHECK

WIND: $(0.6)(29.48\,PSF)(16'\text{-}6")(5'\text{-}0") = 1460^{\#}$

DEAD: $(0.6)\left[(5\,PSF)(16'\text{-}6")(5'\text{-}0") + (4)(9\,PLF)(5'\text{-}0") + (16'\text{-}6")(15.62\,PLF) + (11')(27.48\,PLF)\right]$
SUPERSTRUCTURE
$= 691^{\#}$

FOUNDATION: $(0.6)(5'\text{-}3")(5'\text{-}3")(3'\text{-}0")(150\,PCF) = 7441^{\#}$

$7441^{\#} + 691^{\#} = 8132^{\#} > 1460^{\#}$ OK

CHECK FOUNDATIONS:

LRFD Load Combinations: 1.2D + 1.0W ASCE 7-16, Section 2.3

Resistance Factors: Φ_{plain} = 0.6 ACI 318

Φ_v = 0.75 ACI 318

Φ_b = 0.9 ACI 318

f'_c = **2500** psi

p_a = **150** psf/ft

q_a = **2000** psf

Total Service Wind Load: P_w = 0.45 kips

Total Service Moment at Base: M = 15.04 k-ft

Rectangular Spread Foundation:

Length = **5.25** ft. Width = **5.25** ft. Depth = **4** ft.

Dead Load, P_d = 16.54 kips

Overturning Moment, M_o = 17.06 k-ft

Resistive Moment, M_r = 43.41 k-ft M_r/M_o = 2.54 > 1.5 **O.K.**

Eccentricity, e = M/P_d = 0.91 ft. kern, k = 0.88 ft. **e > k**

Bearing Pressure, q_{max} = 1223.97 psf < q_a = 2000 psf **O.K.**

Moment in Footing M_u = 23.38 k-ft No Reinforcing Required - Use Minimum Steel

Use **6** No. **7** Bars Top and Bottom - Length.

Use **6** No. **7** Bars Top and bottom - Width.

Moment Capacity, ΦM_n = 710.37 k-ft > M_u = 23.38 k-ft **O.K.**

Check Shear, V_u = N/A *See Note Below

Shear Capacity, $\Phi * V_u$ = 40.11 kips/ft

Company:	Ross Bryan Associates	Page:	7
Address:		Specifier:	Jacob R. Holloway
Phone I Fax:	(615) 329-1300 |	E-Mail:	
Design:	iONNA Canopy Single Pole 4-Plug	Date:	9/19/2024
Fastening point:			

Specifier's comments:

1 Input data

Anchor type and diameter:	**Hex Head ASTM F 1554 GR. 36 1**
Item number:	not available
Specification text:	Hilti Hex Head headed stud anchor with 25 in embedment, 1, Steel galvanized, installation per instruction for use
Effective embedment depth:	h_{ef} = 25.000 in.
Material:	ASTM F 1554
Evaluation Service Report:	Hilti Technical Data
Issued I Valid:	- | -
Proof:	Design Method ACI 318-19 / CIP
Stand-off installation:	e_b = 0.000 in. (no stand-off); t = 0.500 in.
Anchor plate[R] :	l_x x l_y x t = 12.000 in. x 12.000 in. x 1.000 in.; (Recommended plate thickness: not calculated)
Profile:	Square HSS (AISC), HSS6X6X.375; (L x W x T) = 6.000 in. x 6.000 in. x 0.375 in.
Base material:	uncracked concrete, 2500, f_c' = 2,500 psi; h = 36.000 in.
Reinforcement:	tension: not present, shear: not present;
	edge reinforcement: none or < No. 4 bar

[R] - The anchor calculation is based on a rigid anchor plate assumption.

Geometry [in.] & Loading [lb, in.lb]

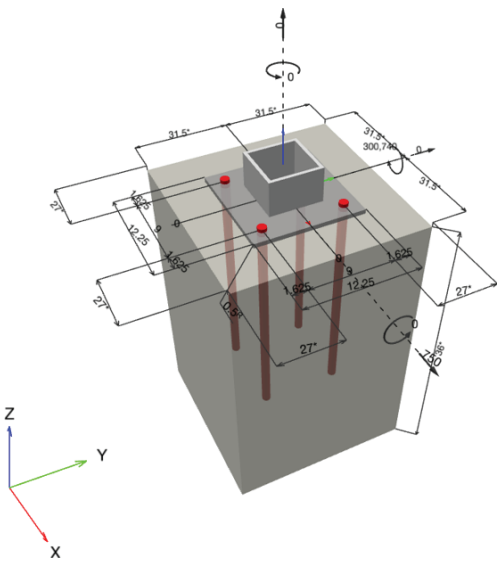

PROFIS Engineering (c) 2003-2024 Hilti AG, FL-9494 Schaan Hilti is a registered Trademark of Hilti AG, Schaan

Company:	Ross Bryan Associates	Page:	8
Address:		Specifier:	Jacob R. Holloway
Phone I Fax:	(615) 329-1300 |	E-Mail:	
Design:	iONNA Canopy Single Pole 4-Plug	Date:	9/19/2024
Fastening point:			

1.1 Design results

Case	Description	Forces [lb] / Moments [in.lb]	Seismic	Max. Util. Anchor [%]
1	Combination 1	N = 0; V_x = 750; V_y = 0; M_x = 0; M_y = 300,740; M_z = 0;	no	69

2 Load case/Resulting anchor forces

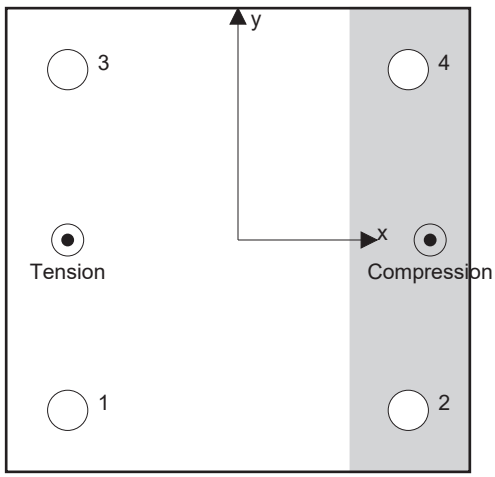

Anchor reactions [lb]

Tension force: (+Tension, -Compression)

Anchor	Tension force	Shear force	Shear force x	Shear force y
1	15,700	188	188	0
2	0	188	188	0
3	15,700	188	188	0
4	0	188	188	0

Max. concrete compressive strain:	0.37 [‰]
Max. concrete compressive stress:	1,631 [psi]
Resulting tension force in (x/y)=(-4.500/0.000):	31,400 [lb]
Resulting compression force in (x/y)=(5.078/0.000):	31,400 [lb]

Anchor forces are calculated based on the assumption of a rigid anchor plate.

3 Tension load

	Load N_{ua} [lb]	Capacity ϕ N_n [lb]	Utilization $\beta_N = N_{ua}/\phi$ N_n	Status
Steel Strength*	15,700	26,361	60	OK
Pullout Strength*	15,700	22,795	69	OK
Concrete Breakout Failure**	31,400	98,994	32	OK
Concrete Side-Face Blowout, direction **	N/A	N/A	N/A	N/A

* highest loaded anchor **anchor group (anchors in tension)

Input data and results must be checked for conformity with the existing conditions and for plausibility!
PROFIS Engineering (c) 2003-2024 Hilti AG, FL-9494 Schaan Hilti is a registered Trademark of Hilti AG, Schaan

3.1 Steel Strength

$N_{sa} = A_{se,N}\, f_{uta}$ ACI 318-19 Eq. (17.6.1.2)

$\phi\ N_{sa} \geq N_{ua}$ ACI 318-19 Table 17.5.2

Variables

$A_{se,N}$ [in.^{2}]	f_{uta} [psi]
0.61	58,000

Calculations

N_{sa} [lb]
35,148

Results

N_{sa} [lb]	ϕ_{steel}	$\phi\ N_{sa}$ [lb]	N_{ua} [lb]
35,148	0.750	26,361	15,700

3.2 Pullout Strength

$N_{pN} = \psi_{c,p}\, N_p$ ACI 318-19 Eq. (17.6.3.1)

$N_p = 8\, A_{brg}\, f'_c$ ACI 318-19 Eq. (17.6.3.2.2a)

$\phi\ N_{pN} \geq N_{ua}$ ACI 318-19 Table 17.5.2

Variables

$\psi_{c,p}$	A_{brg} [in.^{2}]	λ_a	f'_c [psi]
1.400	1.16	1.000	2,500

Calculations

N_p [lb]
23,260

Results

N_{pn} [lb]	$\phi_{concrete}$	$\phi\ N_{pn}$ [lb]	N_{ua} [lb]
32,564	0.700	22,795	15,700

Input data and results must be checked for conformity with the existing conditions and for plausibility!
PROFIS Engineering (c) 2003-2024 Hilti AG, FL-9494 Schaan Hilti is a registered Trademark of Hilti AG, Schaan

Company:	Ross Bryan Associates	Page:	10
Address:		Specifier:	Jacob R. Holloway
Phone I Fax:	(615) 329-1300 |	E-Mail:	
Design:	iONNA Canopy Single Pole 4-Plug	Date:	9/19/2024
Fastening point:			

3.3 Concrete Breakout Failure

$N_{cbg} = \left(\frac{A_{Nc}}{A_{Nc0}}\right) \psi_{ec,N}\ \psi_{ed,N}\ \psi_{c,N}\ \psi_{cp,N}\ N_b$ — ACI 318-19 Eq. (17.6.2.1b)

$\phi\ N_{cbg} \geq N_{ua}$ — ACI 318-19 Table 17.5.2

A_{Nc} see ACI 318-19, Section 17.6.2.1, Fig. R 17.6.2.1(b)

$A_{Nc0} = 9\ h_{ef}^2$ — ACI 318-19 Eq. (17.6.2.1.4)

$\psi_{ec,N} = \left(\frac{1}{1 + \frac{2\ e'_N}{3\ h_{ef}}}\right) \leq 1.0$ — ACI 318-19 Eq. (17.6.2.3.1)

$\psi_{ed,N} = 0.7 + 0.3\left(\frac{c_{a,min}}{1.5h_{ef}}\right) \leq 1.0$ — ACI 318-19 Eq. (17.6.2.4.1b)

$\psi_{cp,N} = \text{MAX}\left(\frac{c_{a,min}}{c_{ac}}, \frac{1.5h_{ef}}{c_{ac}}\right) \leq 1.0$ — ACI 318-19 Eq. (17.6.2.6.1b)

$N_b = 16\ \lambda_a\ \sqrt{f'_c}\ h_{ef}^{5/3}$ — ACI 318-19 Eq. (17.6.2.2.3)

Variables

h_{ef} [in.]	$e_{c1,N}$ [in.]	$e_{c2,N}$ [in.]	$c_{a,min}$ [in.]	$\psi_{c,N}$
24.000	0.000	0.000	27.000	1.250

c_{ac} [in.]	k_c	λ_a	f'_c [psi]
-	16	1.000	2,500

Calculations

A_{Nc} [in.^{2}]	A_{Nc0} [in.^{2}]	$\psi_{ec1,N}$	$\psi_{ec2,N}$	$\psi_{ed,N}$	$\psi_{cp,N}$	N_b [lb]
3,969.00	5,184.00	1.000	1.000	0.925	1.000	159,750

Results

N_{cbg} [lb]	$\phi_{concrete}$	$\phi\ N_{cbg}$ [lb]	N_{ua} [lb]
141,420	0.700	98,994	31,400

Input data and results must be checked for conformity with the existing conditions and for plausibility!
PROFIS Engineering (c) 2003-2024 Hilti AG, FL-9494 Schaan Hilti is a registered Trademark of Hilti AG, Schaan

Company:	Ross Bryan Associates	Page:	11
Address:		Specifier:	Jacob R. Holloway
Phone I Fax:	(615) 329-1300 |	E-Mail:	
Design:	iONNA Canopy Single Pole 4-Plug	Date:	9/19/2024
Fastening point:			

4 Shear load

	Load V_{ua} [lb]	Capacity ϕ V_n [lb]	Utilization $\beta_V = V_{ua}/\phi$ V_n	Status
Steel Strength*	188	13,708	2	OK
Steel failure (with lever arm)*	N/A	N/A	N/A	N/A
Pryout Strength**	750	235,582	1	OK
Concrete edge failure in direction x+**	750	41,967	2	OK

* highest loaded anchor **anchor group (relevant anchors)

4.1 Steel Strength

$V_{sa} = 0.6\ A_{se,V}\ f_{uta}$ ACI 318-19 Eq. (17.7.1.2b)

$\phi\ V_{steel} \geq V_{ua}$ ACI 318-19 Table 17.5.2

Variables

$A_{se,V}$ [in.^{2}]	f_{uta} [psi]
0.61	58,000

Calculations

V_{sa} [lb]
21,089

Results

V_{sa} [lb]	ϕ_{steel}	ϕ V_{sa} [lb]	V_{ua} [lb]
21,089	0.650	13,708	188

Input data and results must be checked for conformity with the existing conditions and for plausibility!
PROFIS Engineering (c) 2003-2024 Hilti AG, FL-9494 Schaan Hilti is a registered Trademark of Hilti AG, Schaan

Company:	Ross Bryan Associates	Page:	12
Address:		Specifier:	Jacob R. Holloway
Phone I Fax:	(615) 329-1300 |	E-Mail:	
Design:	iONNA Canopy Single Pole 4-Plug	Date:	9/19/2024
Fastening point:			

4.2 Pryout Strength

$V_{cpg} = k_{cp} \left[\left(\frac{A_{Nc}}{A_{Nc0}} \right) \psi_{ec,N} \; \psi_{ed,N} \; \psi_{c,N} \; \psi_{cp,N} \; N_b \right]$ ACI 318-19 Eq. (17.7.3.1b)

$\phi \; V_{cpg} \geq V_{ua}$ ACI 318-19 Table 17.5.2

A_{Nc} see ACI 318-19, Section 17.6.2.1, Fig. R 17.6.2.1(b)

$A_{Nc0} = 9 \, h_{ef}^2$ ACI 318-19 Eq. (17.6.2.1.4)

$\psi_{ec,N} = \left(\frac{1}{1 + \frac{2 \, e_N'}{3 \, h_{ef}}} \right) \leq 1.0$ ACI 318-19 Eq. (17.6.2.3.1)

$\psi_{ed,N} = 0.7 + 0.3 \left(\frac{c_{a,min}}{1.5 h_{ef}} \right) \leq 1.0$ ACI 318-19 Eq. (17.6.2.4.1b)

$\psi_{cp,N} = \text{MAX} \left(\frac{c_{a,min}}{c_{ac}}, \frac{1.5 h_{ef}}{c_{ac}} \right) \leq 1.0$ ACI 318-19 Eq. (17.6.2.6.1b)

$N_b = 16 \, \lambda_a \sqrt{f_c'} \, h_{ef}^{5/3}$ ACI 318-19 Eq. (17.6.2.2.3)

Variables

k_{cp}	h_{ef} [in.]	$e_{c1,N}$ [in.]	$e_{c2,N}$ [in.]	$c_{a,min}$ [in.]
2	18.000	0.000	0.000	27.000

$\psi_{c,N}$	c_{ac} [in.]	k_c	λ_a	f_c' [psi]
1.250	∞	16	1.000	2,500

Calculations

A_{Nc} [in.^{2}]	A_{Nc0} [in.^{2}]	$\psi_{ec1,N}$	$\psi_{ec2,N}$	$\psi_{ed,N}$	$\psi_{cp,N}$	N_b [lb]
3,969.00	2,916.00	1.000	1.000	1.000	1.000	98,903

Results

V_{cpg} [lb]	$\phi_{concrete}$	$\phi \; V_{cpg}$ [lb]	V_{ua} [lb]
336,546	0.700	235,582	750

Input data and results must be checked for conformity with the existing conditions and for plausibility!
PROFIS Engineering (c) 2003-2024 Hilti AG, FL-9494 Schaan Hilti is a registered Trademark of Hilti AG, Schaan

4.3 Concrete edge failure in direction x+

$V_{cbg} = \left(\frac{A_{Vc}}{A_{Vc0}}\right) \psi_{ec,V}\ \psi_{ed,V}\ \psi_{c,V}\ \psi_{h,V}\ \psi_{parallel,V}\ V_b$ — ACI 318-19 Eq. (17.7.2.1b)

$\phi\ V_{cbg} \geq V_{ua}$ — ACI 318-19 Table 17.5.2

A_{Vc} see ACI 318-19, Section 17.7.2.1, Fig. R 17.7.2.1(b)

$A_{Vc0} = 4.5\ c_{a1}^2$ — ACI 318-19 Eq. (17.7.2.1.3)

$\psi_{ec,V} = \left(\frac{1}{1 + \frac{e_v'}{1.5c_{a1}}}\right) \leq 1.0$ — ACI 318-19 Eq. (17.7.2.3.1)

$\psi_{ed,V} = 0.7 + 0.3\left(\frac{c_{a2}}{1.5c_{a1}}\right) \leq 1.0$ — ACI 318-19 Eq. (17.7.2.4.1b)

$\psi_{h,V} = \sqrt{\frac{1.5c_{a1}}{h_a}} \geq 1.0$ — ACI 318-19 Eq. (17.7.2.6.1)

$V_b = 9\ \lambda_a\ \sqrt{f_c'}\ c_{a1}^{1.5}$ — ACI 318-19 Eq. (17.7.2.2.1b)

Variables

c_{a1} [in.]	c_{a2} [in.]	e_{cV} [in.]	$\psi_{c,V}$	h_a [in.]
24.000	27.000	0.000	1.400	36.000

l_e [in.]	λ_a	d_a [in.]	f_c' [psi]	$\psi_{parallel,V}$
8.000	1.000	1.000	2,500	1.000

Calculations

A_{Vc} [in.^{2}]	A_{Vc0} [in.^{2}]	$\psi_{ec,V}$	$\psi_{ed,V}$	$\psi_{h,V}$	V_b [lb]
2,268.00	2,592.00	1.000	0.925	1.000	52,909

Results

V_{cbg} [lb]	$\phi_{concrete}$	$\phi\ V_{cbg}$ [lb]	V_{ua} [lb]
59,952	0.700	41,967	750

5 Combined tension and shear loads, per ACI 318-19 section 17.8

β_N	β_V	ζ	Utilization $\beta_{N,V}$ [%]	Status
0.689	0.018	5/3	54	OK

$\beta_{NV} = \beta_N^{\zeta} + \beta_V^{\zeta} <= 1$

PROFIS Engineering (c) 2003-2024 Hilti AG, FL-9494 Schaan Hilti is a registered Trademark of Hilti AG, Schaan

Company:	Ross Bryan Associates	Page:	14
Address:		Specifier:	Jacob R. Holloway
Phone I Fax:	(615) 329-1300 |	E-Mail:	
Design:	iONNA Canopy Single Pole 4-Plug	Date:	9/19/2024
Fastening point:			

6 Warnings

- The anchor design methods in PROFIS Engineering require rigid anchor plates per current regulations (AS 5216:2021, ETAG 001/Annex C, EOTA TR029 etc.). This means load re-distribution on the anchors due to elastic deformations of the anchor plate are not considered - the anchor plate is assumed to be sufficiently stiff, in order not to be deformed when subjected to the design loading. PROFIS Engineering calculates the minimum required anchor plate thickness with CBFEM to limit the stress of the anchor plate based on the assumptions explained above. The proof if the rigid anchor plate assumption is valid is not carried out by PROFIS Engineering. Input data and results must be checked for agreement with the existing conditions and for plausibility!
- Condition A applies where the potential concrete failure surfaces are crossed by supplementary reinforcement proportioned to tie the potential concrete failure prism into the structural member. Condition B applies where such supplementary reinforcement is not provided, or where pullout or pryout strength governs.
- For additional information about ACI 318 strength design provisions, please go to https://submittals.us.hilti.com/PROFISAnchorDesignGuide/

Fastening meets the design criteria!

PROFIS Engineering (c) 2003-2024 Hilti AG, FL-9494 Schaan Hilti is a registered Trademark of Hilti AG, Schaan

7 Installation data

Profile: Square HSS (AISC), HSS6X6X.375; (L x W x T) = 6.000 in. x 6.000 in. x 0.375 in.

Hole diameter in the fixture: d_f = 1.062 in.

Plate thickness (input): 1.000 in.

Recommended plate thickness: not calculated

Anchor type and diameter: Hex Head ASTM F 1554 GR. 36 1

Item number: not available

Maximum installation torque: -

Hole diameter in the base material: - in.

Hole depth in the base material: 25.000 in.

Minimum thickness of the base material: 26.172 in.

Hilti Hex Head headed stud anchor with 25 in embedment, 1, Steel galvanized, installation per instruction for use

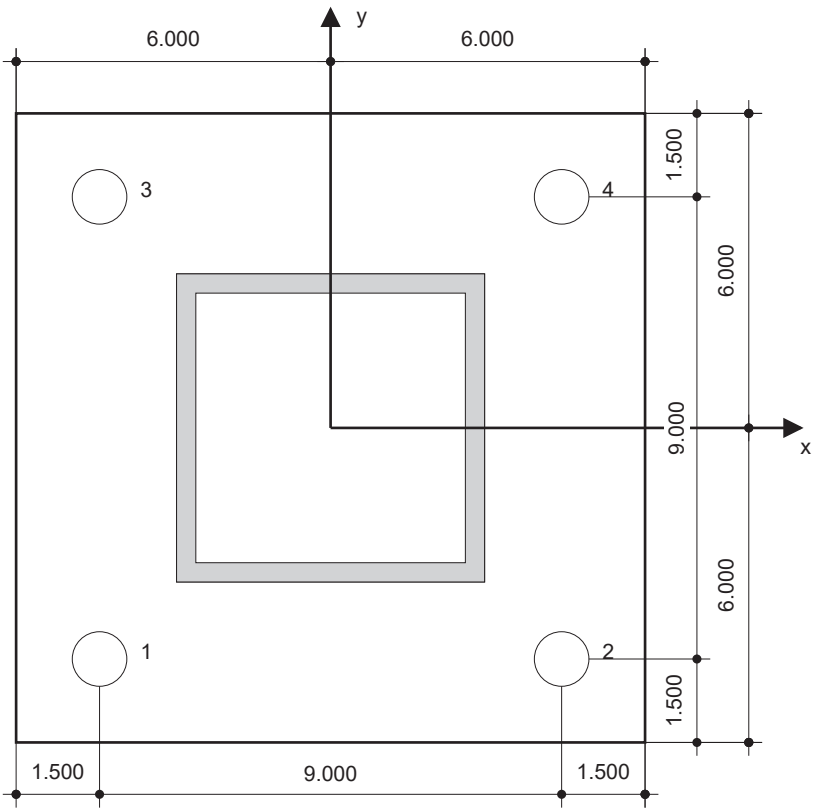

Coordinates Anchor [in.]

Anchor	x	y	c_{-x}	c_{+x}	c_{-y}	c_{+y}
1	-4.500	-4.500	27.000	36.000	27.000	36.000
2	4.500	-4.500	36.000	27.000	27.000	36.000
3	-4.500	4.500	27.000	36.000	36.000	27.000
4	4.500	4.500	36.000	27.000	36.000	27.000

Input data and results must be checked for conformity with the existing conditions and for plausibility!
PROFIS Engineering (c) 2003-2024 Hilti AG, FL-9494 Schaan Hilti is a registered Trademark of Hilti AG, Schaan

8 Remarks; Your Cooperation Duties

- Any and all information and data contained in the Software concern solely the use of Hilti products and are based on the principles, formulas and security regulations in accordance with Hilti's technical directions and operating, mounting and assembly instructions, etc., that must be strictly complied with by the user. All figures contained therein are average figures, and therefore use-specific tests are to be conducted prior to using the relevant Hilti product. The results of the calculations carried out by means of the Software are based essentially on the data you put in. Therefore, you bear the sole responsibility for the absence of errors, the completeness and the relevance of the data to be put in by you. Moreover, you bear sole responsibility for having the results of the calculation checked and cleared by an expert, particularly with regard to compliance with applicable norms and permits, prior to using them for your specific facility. The Software serves only as an aid to interpret norms and permits without any guarantee as to the absence of errors, the correctness and the relevance of the results or suitability for a specific application.
- You must take all necessary and reasonable steps to prevent or limit damage caused by the Software. In particular, you must arrange for the regular backup of programs and data and, if applicable, carry out the updates of the Software offered by Hilti on a regular basis. If you do not use the AutoUpdate function of the Software, you must ensure that you are using the current and thus up-to-date version of the Software in each case by carrying out manual updates via the Hilti Website. Hilti will not be liable for consequences, such as the recovery of lost or damaged data or programs, arising from a culpable breach of duty by you.

PROFIS Engineering (c) 2003-2024 Hilti AG, FL-9494 Schaan Hilti is a registered Trademark of Hilti AG, Schaan

iONNA CANOPY CONCEPT

RBA Structural Engineering, LLC
Engineers
1 Vantage Way, Suite B400 Nashville TN 37228

DESIGNED IN
ACCORDANCE WITH
2021 INTERNATIONAL
BUILDING CODE
ASCE 7-16

"SEALED FOR STRUCTURAL COMPONENTS ONLY"
It is unlawful to alter this document as sealed by a professional engineer.

PROJECT MANAGER

DESIGN SPECIALIST
BEN WEIENETH

SHEET INDEX

C01	COVER
P01	PLANS
E01	ELEVATIONS
S01	SECTIONS
D01	DETAILS

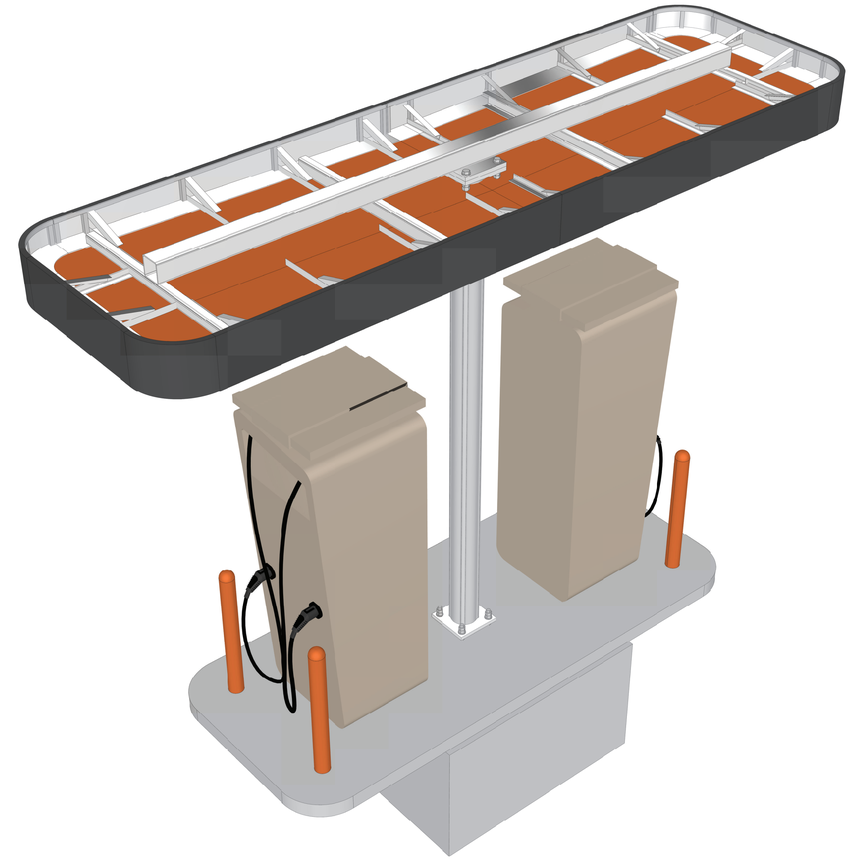

APPROVAL

NAME

ORGANIZATION

TITLE

- ☐ APPROVED
- ☐ APPROVED AS NOTED
- ☐ REVISE & RESUBMIT

NOTES:

OTHER MATERIALS

- ☐ PLYWOOD (3/4" CDX)
- ☐ VAPROSHIELD - IT / SA
- ☐ SHEET METAL (TRIM)
- ☐ NON STD. SCREW
- ☐ SIGNAGE
- ☐ OTHER - SEE NOTES

GENERAL NOTES:

1. MATERIALS: STEEL HSS – ASTM A500 GR. C; STEEL CHANNELS, PLATES, AND ANGLES – ASTM A36.
2. ALL EXPOSED STRUCTURAL STEEL TO BE GALVANIZED.
3. BOLTED CONNECTIONS WITHIN STEEL STRUCTURE TO CONSIST OF ASTM A325 OR ASTM A449 BOLTS, ASTM A563 NUTS, AND ASTM F436 HARDENED WASHERS AT FAYING SURFACES, UNLESS NOTED OTHERWISE. BOLTS TO BE FULLY PRETENSIONED TO 70% MINIMUM TENSILE STRENGTH PER AISC SPECIFICATIONS. VERIFY PRETENSION THROUGH USE OF DIRECT-TENSION INDICATORS OR TWIST-OFF TYPE TENSION CONTROL BOLTS.
4. ANCHOR BOLTS TO CONSIST OF ASTM F1554 GR. 36 OR ASTM A36 THREADED RODS, ASTM A563 NUTS, AND ASTM F436 HARDENED WASHERS AT FAYING SURFACES, UNLESS NOTED OTHERWISE. ALL ANCHOR BOLTS TO BE DOUBLE-NUTTED.
5. ALL EXPOSED HARDWARE TO BE GALVANIZED.
6. ALL STEEL WELDS TO BE COMPLETED PER AWS D1.1 REQUIREMENTS USING E-70 SERIES ELECTRODES. ALL WELDMENTS TO BE FREE OF WELD SPLATTER, SLAG, AND ARCING.
7. REMOVE ALL SHARP EDGES & BURRS.
8. PROVIDE NEOPRENE OR RUBBER ISOLATION BARRIERS BETWEEN ALL DISSIMILAR METALS.

STATE OF NEW HAMPSHIRE
BRENT QUALLS
No. 16740
LICENSED
PROFESSIONAL ENGINEER
09/24/2024

AGI
Architectural Branding - Atlanta
218 River Drive
Cartersville, GA 30120
800-877-7868
www.AGI.net

PROJECT
iONNA CANOPY CONCEPT

...

ARCHITECT
...

DRAWN BY
BJW

JOB #
...

DATE
9/19/24

REV #	DATE	COMMENTS
1	...	...

This document is the sole property of AGI, and all design, manufacturing, reproduction, use and sale rights regarding the same are expressly forbidden. It is submitted under a confidential relationship, for a special purpose, and the recipient, by accepting this document assumes custody and agrees that this document will not be copied or reproduced in whole or in part, nor its contents revealed in any manner or to any person except for the purpose for which it was tendered, nor any special features peculiar to this design be incorporated in other projects.

Approved By

Date Approved

SHEET NUMBER
1 of 5

SHEET NUMBER
C01

T:\CORPORATE IMAGE New\IN DEVELOPMENT\IONNA Canopy\Design Documents\Current Models\IONNA Canopy - Single Post 4 Pug.3dm page 1 of 5 printed: 9/19/2024 11:18 last saved: 9/19/2024 11:16

RBA Structural Engineering, LLC
Engineers
1 Vantage Way, Suite B400 Nashville TN 37228

DESIGNED IN ACCORDANCE WITH 2021 INTERNATIONAL BUILDING CODE ASCE 7-16

"SEALED FOR STRUCTURAL COMPONENTS ONLY"
It is unlawful to alter this document as sealed by a professional engineer.

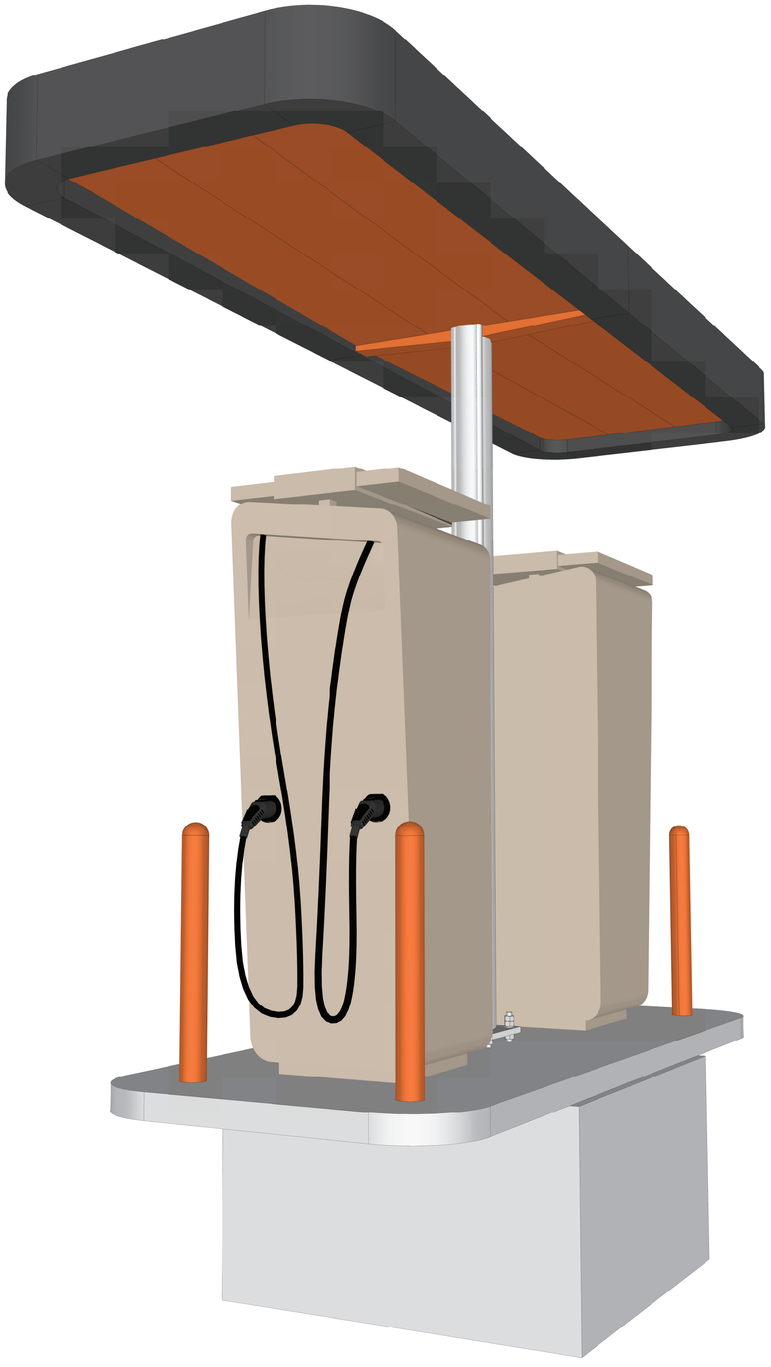

1 / P01 PERSPECTIVE VEIW
REF: NTS

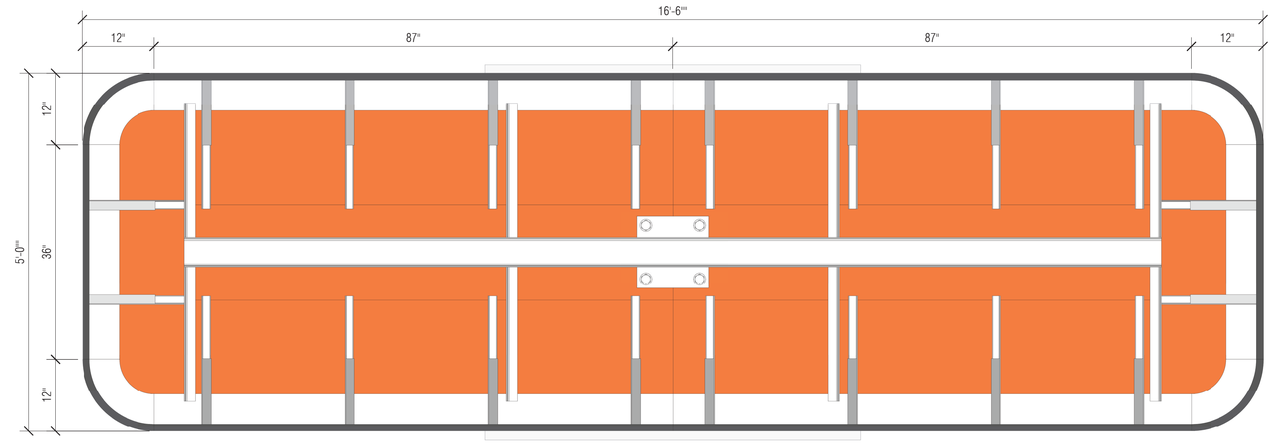

2 / P01 TOP VIEW
REF: 1" = 1'-0"

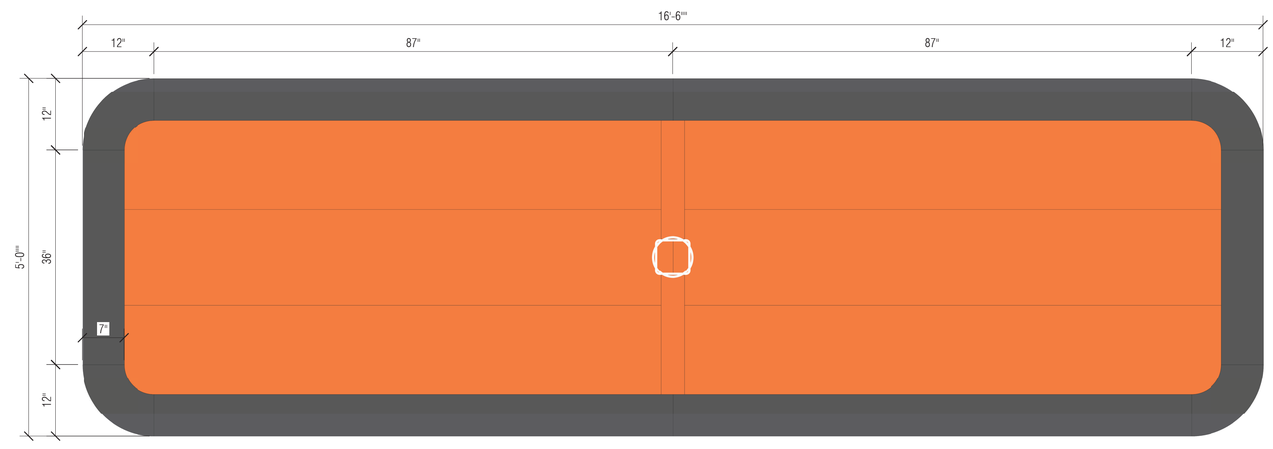

3 / P01 REFLECTED CEILING PLAN
REF: 1" = 1'-0"

STATE OF NEW HAMPSHIRE
STEVEN J. QUALLS
QUALLS
No.16740
LICENSED
PROFESSIONAL ENGINEER
09/24/2024

AGI

Architectural Branding - Atlanta

218 River Drive
Cartersville, GA 30120
800-877-7868
www.AGI.net

PROJECT
iONNA CANOPY CONCEPT

...

ARCHITECT
...

DRAWN BY
BJW

JOB #
...

DATE
9/19/24

REV #	DATE	COMMENTS
1	...	...

This document is the sole property of AGI, and all design, manufacturing, reproduction, use and sale rights regarding the same are expressly forbidden. It is submitted under a confidential relationship, for a special purpose, and the recipient, by accepting this document assumes custody and agrees that this document will not be copied or reproduced in whole or in part, nor its contents revealed in any manner or to any person except for the purpose for which it was tendered, nor any special features peculiar to this design be incorporated in other projects.

Approved By

Date Approved

SHEET NUMBER
2 of 5

SHEET NUMBER
P01

T:\CORPORATE IMAGE New\R DEVELOPMENT\iONNA Canopy\Design Documents\Current Models\iONNA Canopy - Single Pole & Plug.3dm page 2 of 5 printed 9/19/2024 11:18 last saved 9/19/2024 11:16

RBA Structural Engineering, LLC
Engineers
1 Vantage Way, Suite B400 Nashville TN 37228

DESIGNED IN ACCORDANCE WITH 2021 INTERNATIONAL BUILDING CODE ASCE 7-16

"SEALED FOR STRUCTURAL COMPONENTS ONLY"
It is unlawful to alter this document as sealed by a professional engineer.

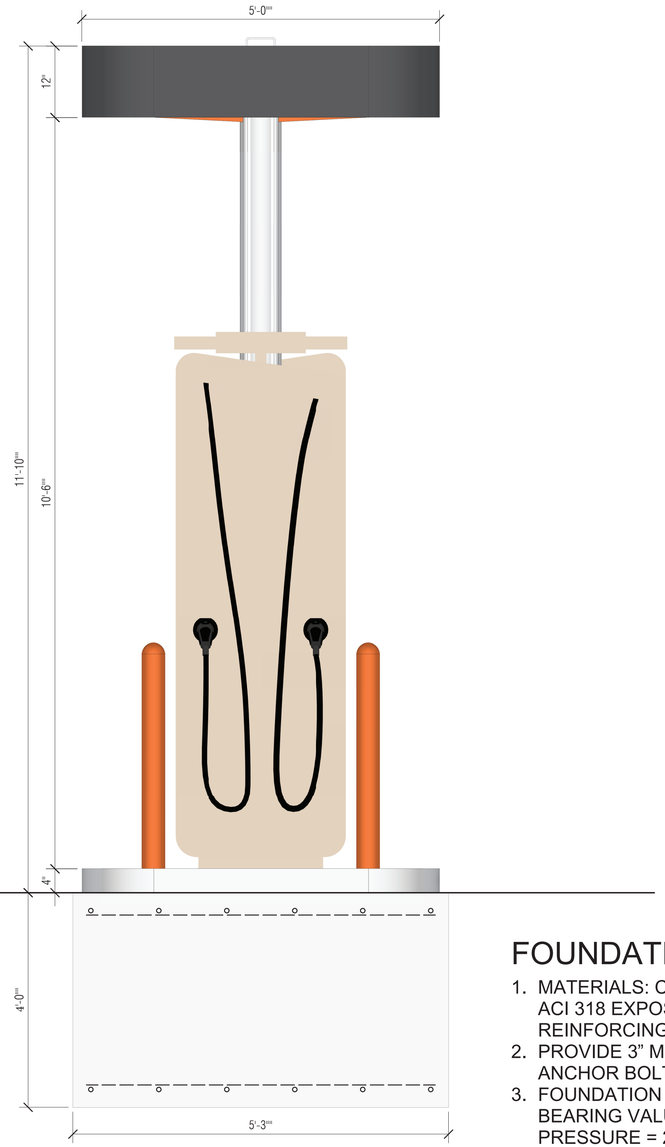

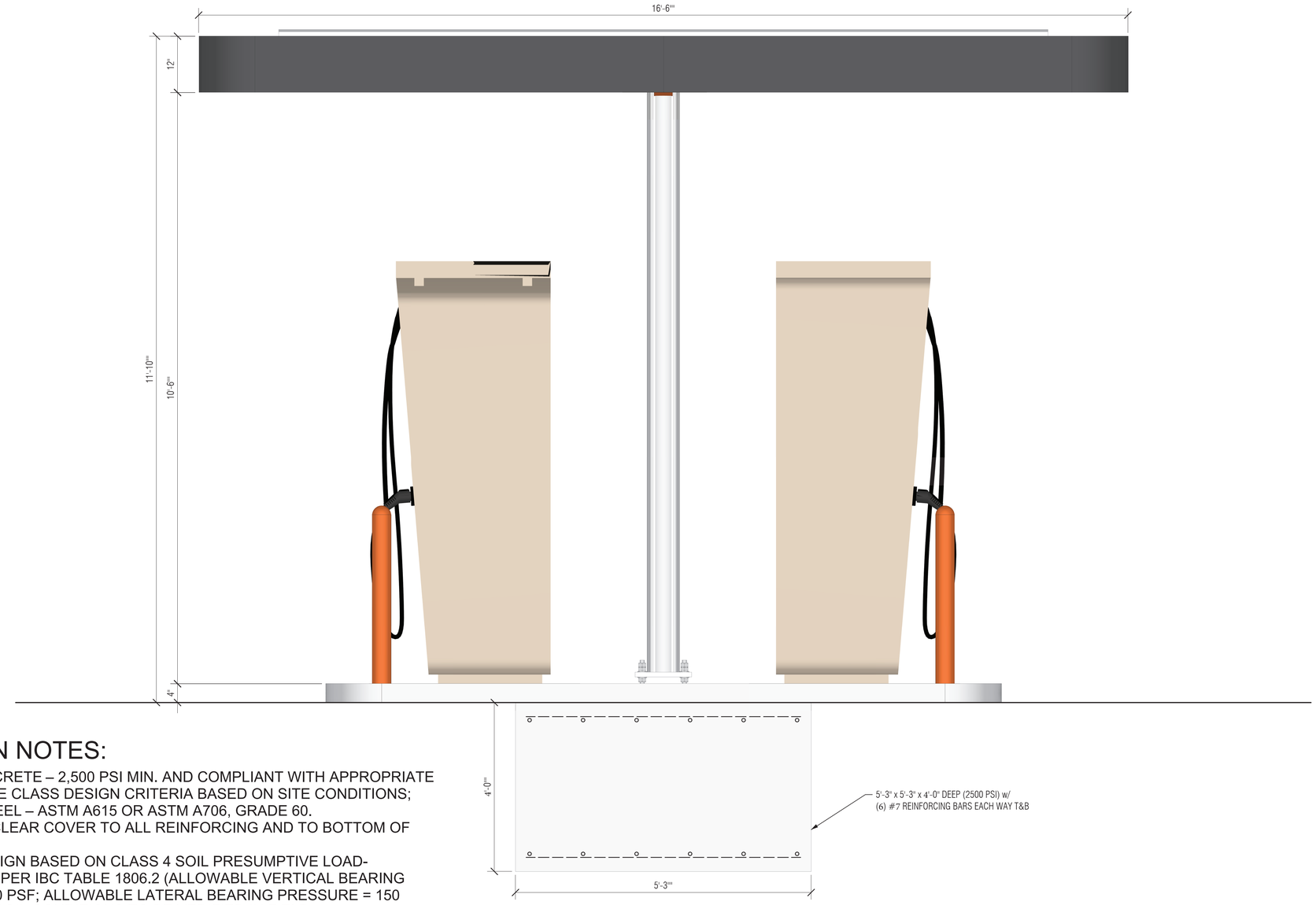

FOUNDATION NOTES:

1. MATERIALS: CONCRETE – 2,500 PSI MIN. AND COMPLIANT WITH APPROPRIATE ACI 318 EXPOSURE CLASS DESIGN CRITERIA BASED ON SITE CONDITIONS; REINFORCING STEEL – ASTM A615 OR ASTM A706, GRADE 60.
2. PROVIDE 3" MIN. CLEAR COVER TO ALL REINFORCING AND TO BOTTOM OF ANCHOR BOLTS.
3. FOUNDATION DESIGN BASED ON CLASS 4 SOIL PRESUMPTIVE LOAD-BEARING VALUES PER IBC TABLE 1806.2 (ALLOWABLE VERTICAL BEARING PRESSURE = 2,000 PSF; ALLOWABLE LATERAL BEARING PRESSURE = 150 PSF/FT). ACTUAL SOIL CONDITIONS TO BE VERIFIED IN FIELD.

STATE OF NEW HAMPSHIRE
STEVEN PAUL QUALLS
No. 16740
LICENSED
PROFESSIONAL ENGINEER
09/24/2024

1 / E01 END VIEW
REF: 1" = 1'-0"

2 / E01 SIDE VIEW
REF: 1" = 1'-0"

AGI
Architectural Branding - Atlanta
218 River Drive
Cartersville, GA 30120
800-877-7868
www.AGI.net

PROJECT
iONNA CANOPY CONCEPT

...

ARCHITECT
...

DRAWN BY
BJW

JOB #
...

DATE
9/19/24

REV #	DATE	COMMENTS
1	...	...

This document is the sole property of AGI, and all design, manufacturing, reproduction, use and sale rights regarding the same are expressly forbidden. It is submitted under a confidential relationship, for a special purpose, and the recipient, by accepting this document assumes custody and agrees that this document will not be copied or reproduced in whole or in part, nor its contents revealed in any manner or to any person except for the purpose for which it was tendered, nor any special features peculiar to this design be incorporated in other projects.

Approved By

Date Approved

SHEET NUMBER
3 of 5

SHEET NUMBER
E01

T:\CORPORATE IMAGE New\06 DEVELOPMENT\IONNA Canopy\Design Documents\Current Models\IONNA Canopy - Single Pole & Plug.3dm page 3 of 5 printed 9/19/2024 11:19 last saved 9/19/2024 11:16

RBA Structural Engineering, LLC
Engineers
1 Vantage Way, Suite B400 Nashville TN 37228

DESIGNED IN ACCORDANCE WITH 2021 INTERNATIONAL BUILDING CODE ASCE 7-16

"SEALED FOR STRUCTURAL COMPONENTS ONLY"
It is unlawful to alter this document as sealed by a professional engineer.

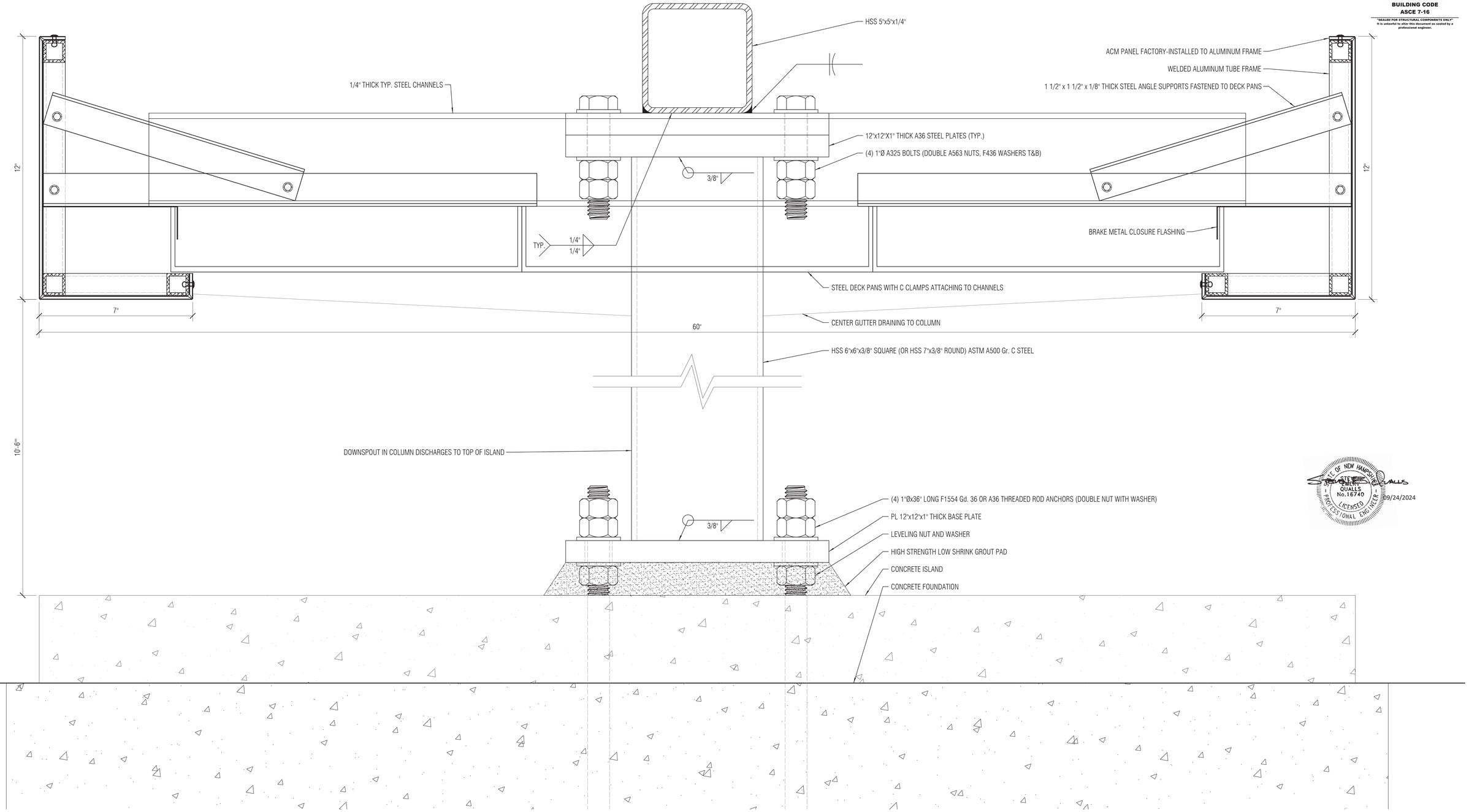

STATE OF NEW HAMPSHIRE
STEVEN DUANE QUALLS
No. 16740
LICENSED
PROFESSIONAL ENGINEER
09/24/2024

1 / S01 CANOPY SECTION
REF: 6" = 1'-0"

Architectural Branding - Atlanta

218 River Drive
Cartersville, GA 30120
800-877-7868
www.AGI.net

PROJECT
iONNA CANOPY CONCEPT

...

ARCHITECT
...

DRAWN BY
BJW

JOB #
...

DATE
9/19/24

REV #	DATE	COMMENTS
1	...	...

This document is the sole property of AGI, and all design, manufacturing, reproduction, use and sale rights regarding the same are expressly forbidden. It is submitted under a confidential relationship, for a special purpose, and the recipient, by accepting this document assumes custody and agrees that this document will not be copied or reproduced in whole or in part, nor its contents revealed in any manner or to any person except for the purpose for which it was tendered, nor any special features peculiar to this design be incorporated in other projects.

Approved By _____

Date Approved _____

SHEET NUMBER
4 of 5

SHEET NUMBER
S01

T:\CORPORATE IMAGE New\R DEVELOPMENT\ONNA Canopy\Design Documents\Current Models\ONNA Canopy - Single Pole & Plug.3dm page 4 of 5 printed 9/19/2024 11:18 last saved 9/19/2024 11:16

RBA Structural Engineering, LLC
Engineers
1 Vantage Way, Suite B400 Nashville TN 37228

DESIGNED IN ACCORDANCE WITH 2021 INTERNATIONAL BUILDING CODE ASCE 7-16

"SEALED FOR STRUCTURAL COMPONENTS ONLY"
It is unlawful to alter this document as sealed by a professional engineer.

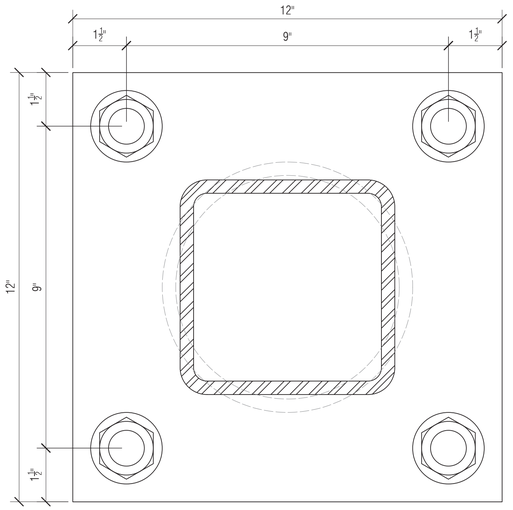

1 / D01 COLUMN BASE DETAIL
REF: 6" = 1'-0"

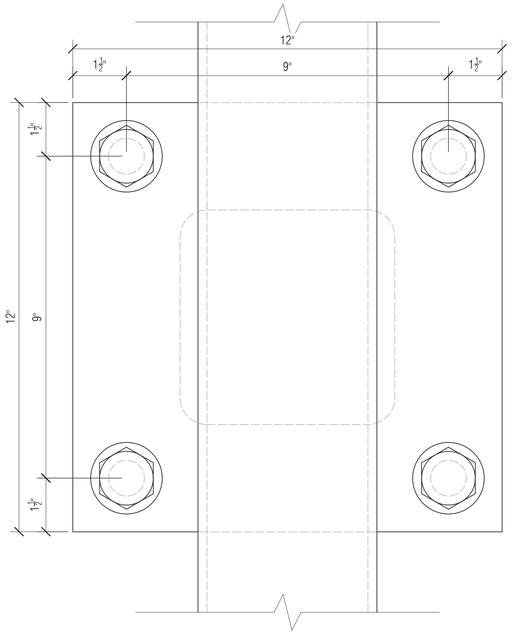

2 / D01 MAIN BEAM TO COLUMN CONNECTION DETAIL
REF: 6" = 1'-0"

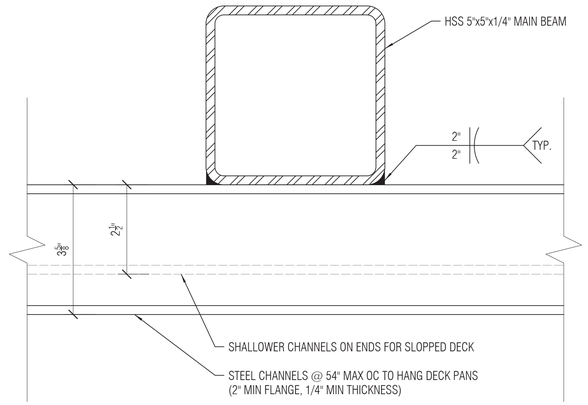

3 / D01 CHANNEL TO MAIN BEAM CONNECTION DETAIL
REF: 6" = 1'-0"

STATE OF NEW HAMPSHIRE
CHERY QUALLS
No. 16740
LICENSED
PROFESSIONAL ENGINEER
9/24/2024

AGI
Architectural Branding - Atlanta
218 River Drive
Cartersville, GA 30120
800-877-7868
www.AGI.net

PROJECT
iONNA CANOPY CONCEPT

...

ARCHITECT
...

DRAWN BY
BJW

JOB #
...

DATE
9/19/24

REV #	DATE	COMMENTS
1	...	...

This document is the sole property of AGI, and all design, manufacturing, reproduction, use and sale rights regarding the same are expressly forbidden. It is submitted under a confidential relationship, for a special purpose, and the recipient, by accepting this document assumes custody and agrees that this document will not be copied or reproduced in whole or in part, nor its contents revealed in any manner or to any person except for the purpose for which it was tendered, nor any special features peculiar to this design be incorporated in other projects.

Approved By
Date Approved

SHEET NUMBER
5 of 5
SHEET NUMBER
D01

T:\CORPORATE IMAGE New\IN DEVELOPMENT\IONNA Canopy\Design Documents\Current Models\IONNA Canopy - Single Pole & Plug.3dm page 5 of 5 printed 9/19/2024 11:19 last saved 9/19/2024 11:16

18th November 2024

City of Portsmouth, New Hampshire AGI Ionna EV Charging

For the new EV Charging installation at 1600 Woodbury Ave; the construction of the new electric vehicle (EV) charging site will prioritize the use of sustainable building materials to minimize environmental impact and promote long-term sustainability.

Key strategies include:

Recycled Materials: Wherever possible, the project will incorporate recycled materials, such as reclaimed wood, recycled steel, and glass, reducing the demand for virgin resources and diverting waste from landfills.

Low-Impact Foundations: We will use low-impact foundation methods, such as pervious concrete, which allows rainwater to seep through and helps reduce runoff, supporting stormwater management and promoting groundwater recharge.

Sustainable Landscaping: Native plants and drought-tolerant landscaping will be used around the site, reducing the need for water-intensive irrigation, and supporting local biodiversity.

Energy-Efficient Lighting: The site will incorporate LED lighting for both the charging areas and surrounding spaces. LEDs consume less energy, have a longer lifespan, and provide high-quality illumination, reducing energy consumption significantly.

Smart Energy Management: Advanced energy management systems will be installed to optimize electricity usage, allowing for real-time monitoring of energy demand, and minimizing waste. This system can automatically adjust power needs to individual dispensers for charging efficiency.

Stormwater Management Systems: The design will utilize the existing parking lots storm water management systems to manage runoff before it reaches nearby water systems. This helps prevent pollution and supports water quality.

Efficient Site Management: We will implement a construction waste management plan to monitor and track all waste generated during the project. This will help identify opportunities to reduce, reuse, or recycle materials, and ensure that the amount of waste sent to landfills is minimized.

By using these sustainable building materials and practices, the new EV charging site will not only support the transition to cleaner transportation but also contribute to environmental conservation and the reduction of carbon emissions.

Regards,

Dallas Pelland / Dallas Pelland / Client Manager

7171 WEST 95TH STREET, SUITE 600
OVERLAND PARK, KANSAS 66212

p 913.438.7700
f 913.438.7777
ssc.us.com

IONNA EV Charger Maintenance Plan for Whole Foods, Portsmouth, NH

Standard Preventative Maintenance SOW

1. Standard Preventative Maintenance is outlined below, as recommended by manufacturuer of charging stations. For this location, the Alpitronics Hypercharger maintenance guide is followed.

The following services are also provided to ensure adequate uptimes.

2. Provide and catalogue photos to document the condition of all charging equipment, protective wheel stops & bollards and pavement markings, and other (each elevation).
3. Note potential obstructions that might limit access or charger visibility.
4. Use mild detergent to clean charging equipment.
5. Make safe and report any visible conditions that pose a risk to the general public and facility employees.
6. Create and distribute Corrective Action Reports to document and initiate customer generated reactive service request.
7. Maintain and provide customer access to all service records including but not necessary limited to photographs, completion checklist, completion dates, service tech information, Corrective Action Reports, etc.

10. PREVENTIVE MAINTENANCE

For the safe operation of the charging station, annual maintenance of the charging station and a check of its safety devices is required. Depending on the installation location of the charging station and the environmental influences prevailing there (such as dirt, moisture, etc.), shorter maintenance intervals may also be necessary for certain components. Regular inspection is therefore recommended.

WARNING

Adhere to all safety warnings outlined in Chapter 1 of this manual.

CAUTION

The preventive maintenance of the charging stations must only be carried out by professionally qualified individuals, as per local regulations and safety standards. These individuals must also have successfully completed the mandatory training courses prescribed by Alpitronic.

All of the following preventive maintenance work is mandatory. These must be carried out by filling out the **digital maintenance protocol** on Hyperdoc and sending it (including photo documentation) to Alpitronic.

Failure to perform preventive maintenance properly and in accordance with this manual may lead to loss or limitation of warranty or liability in case of damages on the Product(s) or goods belonging to third parties or injuries to third parties. The same applies when the maintenance protocol is not properly completed or not sent to Alpitronic.

For Hyperdoc registration: https://account.hypercharger.us/register (the digital protocols are only available to appropriately trained technicians (see above).

thomas.hamilton@ionna.com
2026-02-24 14:12:26

All rights reserved. Reproduction, in whole or part, of this document is permissible only with express written consent from Alpitronic Americas LLC.

Depending on the individual operating conditions of the Hypercharger, further maintenance work may be necessary. Therefore, the following list should not be taken as complete.

Maintenance work	Description
External visual inspection	• Condition of housing • NEMA rating (3R) • Stability • Accessibility • Credit card terminal (if available)
Checking charging cables & plugs	• Checking all cable parts (cable sleeve, cable, cable plug, mating face, pins) for the absence of damage (e.g. cable sheath intact, no crushing or cracks, pins undamaged, cable intact at transfer point, etc.) • Are all outside cable glands tight?
Checking the sealing of the input conductors	Visually verify that the input conductors are properly sealed and tight
Checking screws	• Visual random check of internal screw connections • Random check of tightening torques
Check the cooling unit (if available), and replace coolant if necessary	• Filling level • Connection • Absence of air pockets & creases
Check for cleanliness	Check the cleanliness inside the charging station
Check condensation	Check for the absence of traces of condensation inside the charging station
Check and replace filter mats if necessary	Checking for integrity and contamination
Review of protective measures	• Visual inspection of the earthing system • Test earthing resistance • Test continuity of the equipotential bonding connections
Check the supply line (only if there is no commissioning protocol)	• Testing the insulation resistance on the busbars of the input switchgear • Information on the existing protective device • Check short-circuit current
Checking insulation resistance of DC charging outlets	Check the insulation resistance of the pins for each existing DC charging outlet
Check overvoltage protection	Check the optical defect display of the overvoltage protection
Check residual current protective devices	Functional test of the circuit breakers with residual current monitoring
Touch protection	Check whether all protective covers have been correctly attached
Check RFID reader	Functional test of the RFID reader
Check connectivity of SIM cards	• Check the connection to the Alpitronic backend • Check the connection to the customer backend
Check display elements	• Functional test of the display + button • Functional test of the screen display and, if necessary, the touch screen of the credit card terminal
Verification of LED rings	Functional test of the LED rings on the connectors

Table 25: Annual maintenance work

thomas.hamilton@ionna.com
Thomas Hamilton - 2025-10-27
All rights reserved. Reproduction, in whole or part, of this document is permissible only with express written consent from Alpitronic Americas LLC.

11. REPARATION AND SERVICE

The modular design of the Hypercharger enables easy repair of defective components.

WARNING

Adhere to all safety warnings outlined in Chapter 1 of this manual.

CAUTION

Please note that repairs to the Hypercharger **are only** carried out by professionally qualified individuals, as per local regulations and safety standards.

All necessary legal and safety measures must be observed! The specific safety measures for repairs and upgrades can be found in the corresponding instructions.

Be sure to consult Hypercharger support before repairs are carried out. support@hypercharger.us or +1 866-881-0090.

Every repair and every component replacement must be reported to support@hypercharger.us, including the serial numbers of the individual parts.

NOTICE

To order spare parts, contact aftersales@hypercharger.it.

The Hypercharger support is available around the clock (24/7) by phone on +1 866-881-0090 or by email (support@hypercharger.us).

thomas.hamilton@ionna.com
Downloaded on 2025-08-25
All rights reserved. Reproduction, in whole or part, of this document is permissible only with express written consent from Alpitronic Americas LLC.

Standard Reactive Maintenance SOW

REACTIVE SERVICE: Intended to provide priority service outside of the Preventative Maintenance program. Reactive Service is initiated as follows:

1. Customer-Initiated Service Request
    a. Service request shall be submitted directly or through the customer's service platform of choice. All requests shall be directed to the Service Dispatch Email
    b. All customer-initiated service request will have an NTE of $1,500.00
    c. If in the event estimated service exceeds the NTE, a formal proposal shall be submitted for customer approval prior to beginning work. If in the event, the NTE increase is not approved, invoices will be processed for diagnostic services only that were rendered
    d. Final invoices will be submitted with before/after photos and other documentation requested by customer to verify work performed.
    e. Reactive Service will be performed on a time and material basis in accordance with the Reactive Service Fee Schedule (see Attachment A)

2. Product Inventory
    a. Customer shall maintain an ample supply of maintenance kits for the sole purpose of performing reactive maintenance service.
        i. AGI will determine the min-max quantities of maintenance kits customer shall have on hand. Min-max quantities shall be updated quarterly based upon EV Charging units in the program and reactive maintenance frequency. Each maintenance
        ii. Kits will contain the following:
            1. Prepaid return shipment labels and reusable packaging suitable for return of unused and inoperative components to customer.
            2. Kit shall contain replacement parts for the five (5) most common component failures
                a. Part No. 1
                b. Part No. 2
                c. Part No. 3
                d. Part No. 4
                e. Part No. 5
            3. Kit parts list is subject to change
        iii. Customer shall ship maintenance kits to AGI service technician to facilitate repairs.
        iv. Service dispatches are scheduled once maintenance kits are received by AGI service technicians.
        v. AGI will provide tracking numbers for all returned maintenance kit shipments.

3. Service Requirements.
    a. All service requests shall be acknowledged within 24 hours
    b. Service types shall dictate the SLA as follows:
        i. P1-Critical: Incidents which create a liability and demand an immediate response. 4-to-8-hour response required. P1-Critical service is a “Make Safe” response and generally doesn’t result in repair on the first trip.
        ii. P2-High: Customer request an investigative assessment of equipment prior to shipping the Maintenance Kit. 24-to-48-hour response required
        iii. P3-Medium: Service request that are non-critical and pose no risk to the public. 5–7 day response from receipt of customer provide Maintenance Kit
        iv. P4-Low: Service request that have limited impact on equipment operations. This SLA is generally for schedule services beyond traditional break-fix maintenance. 30-day response required.

    c. All invoices shall be submitted for payment within 30 days of completion
    d. When possible, service should be completed on the first trip. The Customer is expected to maintain adequate inventory of Maintenance Kits to maximize first trip completions.

City of Portsmouth, New Hampshire

Site Plan Application Checklist

This site plan application checklist is a tool designed to assist the applicant in the planning process and for preparing the application for Planning Board review. The checklist is required to be completed and uploaded to the Site Plan application in the City's online permitting system. A pre-application conference with a member of the planning department is strongly encouraged as additional project information may be required depending on the size and scope. The applicant is cautioned that this checklist is only a guide and is not intended to be a complete list of all site plan review requirements. Please refer to the Site Plan review regulations for full details.

Applicant Responsibilities (Section 2.5.2): Applicable fees are due upon application submittal along with required attachments. The application shall be complete as submitted and provide adequate information for evaluation of the proposed site development. Waiver requests must be submitted in writing with appropriate justification.

Name of Applicant: AGI c/o SSC Date Submitted: 11/15/2024

Application # (in City's online permitting): LU-24-182

Site Address: 1600 Woodbury Ave Map: 238 Lot: 16

Application Requirements			
☑	**Required Items for Submittal**	**Item Location (e.g. Page or Plan Sheet/Note #)**	**Waiver Requested**
☑	Complete application form submitted via the City's web-based permitting program (2.5.2.1**(2.5.2.3A)**		N/A
☑	All application documents, plans, supporting documentation and other materials uploaded to the application form in viewpoint in digital Portable Document Format (PDF). One hard copy of all plans and materials shall be submitted to the Planning Department by the published deadline. **(2.5.2.8)**		N/A

Site Plan Review Application Required Information			
☑	**Required Items for Submittal**	**Item Location (e.g. Page/line or Plan Sheet/Note #)**	**Waiver Requested**
☑	Statement that lists and describes "green" building components and systems. **(2.5.3.1B)**	Separate Document	
☑	Existing and proposed gross floor area and dimensions of all buildings and statement of uses and floor area for each floor. **(2.5.3.1C)**	C-1.0 & Survey	N/A
☑	Tax map and lot number, and current zoning of all parcels under Site Plan Review. **(2.5.3.1D)**	C-1.0	N/A

Site Plan Review Application Required Information			
☑	**Required Items for Submittal**	**Item Location (e.g. Page/line or Plan Sheet/Note #)**	**Waiver Requested**
☑	Owner's name, address, telephone number, and signature. Name, address, and telephone number of applicant if different from owner. **(2.5.3.1E)**	C-1.0	N/A
☑	Names and addresses (including Tax Map and Lot number and zoning districts) of all direct abutting property owners (including properties located across abutting streets) and holders of existing conservation, preservation or agricultural preservation restrictions affecting the subject property. **(2.5.3.1F)**	C-1.0	N/A
☑	Names, addresses and telephone numbers of all professionals involved in the site plan design. **(2.5.3.1G)**	T-1.0	N/A
☑	List of reference plans. **(2.5.3.1H)**	T-1.0	N/A
☑	List of names and contact information of all public or private utilities servicing the site. **(2.5.3.1I)**	Survey	N/A

Site Plan Specifications			
☑	**Required Items for Submittal**	**Item Location (e.g. Page/line or Plan Sheet/Note #)**	**Waiver Requested**
☑	Full size plans shall not be larger than 22 inches by 34 inches with match lines as required, unless approved by the Planning Director.. **(2.5.4.1A)**	Required on all plan sheets	N/A
☑	Scale: Not less than 1 inch = 60 feet and a graphic bar scale shall be included on all plans. **(2.5.4.1B)**	Required on all plan sheets	N/A
☑	GIS data should be referenced to the coordinate system New Hampshire State Plane, NAD83 (1996), with units in feet. **(2.5.4.1C)**	Survey	N/A
☑	Plans shall be drawn to scale and stamped by a NH licensed civil engineer. **(2.5.4.1D)**	Required on all plan sheets	N/A
☑	Wetlands shall be delineated by a NH certified wetlands scientist and so stamped. **(2.5.4.1E)**	Survey	N/A
☑	Title (name of development project), north point, scale, legend. **(2.5.4.2A)**	Survey	N/A
☑	Date plans first submitted, date and explanation of revisions. **(2.5.4.2B)**	Border, all sheets	N/A
☑	Individual plan sheet title that clearly describes the information that is displayed. **(2.5.4.2C)**	Required on all plan sheets	N/A
☑	Source and date of data displayed on the plan. **(2.5.4.2D)**	Survey	N/A

Site Plan Specifications – Required Exhibits and Data			
☑	**Required Items for Submittal**	**Item Location (e.g. Page/line or Plan Sheet/Note #)**	**Waiver Requested**
☑	**1. Existing Conditions: (2.5.4.3A)** • Surveyed plan of site showing existing natural and built features; • Existing building footprints and gross floor area; • Existing parking areas and number of parking spaces provided; • Zoning district boundaries; • Existing, required, and proposed dimensional zoning requirements including building and open space coverage, yards and/or setbacks, and dwelling units per acre; • Existing impervious and disturbed areas; • Limits and type of existing vegetation; • Wetland delineation, wetland function and value assessment (including vernal pools); • SFHA, 100-year flood elevation line and BFE data, as required.	Survey	
☑	**2. Buildings and Structures: (2.5.4.3B)** • Plan view: Use, size, dimensions, footings, overhangs, 1st fl. elevation; • Elevations: Height, massing, placement, materials, lighting, façade treatments; • Total Floor Area; • Number of Usable Floors; • Gross floor area by floor and use.	C-1.2, SA Package	
☑	**3. Access and Circulation: (2.5.4.3C)** • Location/width of access ways within site; • Location of curbing, right of ways, edge of pavement and sidewalks; • Location, type, size and design of traffic signing (pavement markings); • Names/layout of existing abutting streets; • Driveway curb cuts for abutting prop. and public roads; • If subdivision; Names of all roads, right of way lines and easements noted; • AASHTO truck turning templates, description of minimum vehicle allowed being a WB-50 (unless otherwise approved by TAC).	Survey	
☑	**4. Parking and Loading: (2.5.4.3D)** • Location of off street parking/loading areas, landscaped areas/buffers; • Parking Calculations (# required and the # provided).	Survey	
☑	**5. Water Infrastructure: (2.5.4.3E)** • Size, type and location of water mains, shut-offs, hydrants & Engineering data; • Location of wells and monitoring wells (include protective radii).	Survey	
☑	**6. Sewer Infrastructure: (2.5.4.3F)** • Size, type and location of sanitary sewage facilities & Engineering data, including any onsite temporary facilities during construction period.	Survey	

☑	**7. Utilities: (2.5.4.3G)** • The size, type and location of all above & below ground utilities; • Size type and location of generator pads, transformers and other fixtures.	E-1.0 & Survey	
☑	**8. Solid Waste Facilities: (2.5.4.3H)**	Survey	
	• The size, type and location of solid waste facilities.	Survey	
☑	**9. Storm water Management: (2.5.4.3I)** • The location, elevation and layout of all storm-water drainage. • The location of onsite snow storage areas and/or proposed off-site snow removal provisions. • Location and containment measures for any salt storage facilities • Location of proposed temporary and permanent material storage locations and distance from wetlands, water bodies, and stormwater structures.	Survey	
☑	**10. Outdoor Lighting: (2.5.4.3J)** • Type and placement of all lighting (exterior of building, parking lot and any other areas of the site) and photometric plan.	Photometric Package	
☑	**11.** Indicate where dark sky friendly lighting measures have been implemented. **(10.1)**	Photometric Package	
☑	**12. Landscaping: (2.5.4.3K)** • Identify all undisturbed area, existing vegetation and that which is to be retained; • Location of any irrigation system and water source.	C-1.3	
☑	**13. Contours and Elevation: (2.5.4.3L)** • Existing/Proposed contours (2 foot minimum) and finished grade elevations.	Survey	
☑	**14. Open Space: (2.5.4.3M)** • Type, extent and location of all existing/proposed open space.	C-1.3	
☑	**15. All easements, deed restrictions and non-public rights of ways. (2.5.4.3N)**	Survey	
☑	**16. Character/Civic District (All following information shall be included): (2.5.4.3P)** • Applicable Building Height (10.5A21.20 & 10.5A43.30); • Applicable Special Requirements (10.5A21.30); • Proposed building form/type (10.5A43); • Proposed community space (10.5A46).	C-1.2	
☑	**17. Special Flood Hazard Areas (2.5.4.3Q)** • The proposed development is consistent with the need to minimize flood damage; • All public utilities and facilities are located and construction to minimize or eliminate flood damage; • Adequate drainage is provided so as to reduce exposure to flood hazards.	Survey	

Other Required Information			
☑	**Required Items for Submittal**	**Item Location (e.g. Page/line or Plan Sheet/Note #)**	**Waiver Requested**
☐	Traffic Impact Study or Trip Generation Report, as required. **(3.2.1-2)**		N/A
☑	Indicate where Low Impact Development Design practices have been incorporated. **(7.1)**	Separate Document	
☑	Indicate whether the proposed development is located in a wellhead protection or aquifer protection area. Such determination shall be approved by the Director of the Dept. of Public Works. **(7.3.1)**	C-1.0	
☑	Stormwater Management and Erosion Control Plan. **(7.4)**	C-1.4	
☑	Inspection and Maintenance Plan **(7.6.5)**	Separate Document	

Final Site Plan Approval Required Information			
☑	**Required Items for Submittal**	**Item Location (e.g. Page/line or Plan Sheet/Note #)**	**Waiver Requested**
☑	All local approvals, permits, easements and licenses required, including but not limited to: • Waivers; • Driveway permits; • Special exceptions; • Variances granted; • Easements; • Licenses. **(2.5.3.2A)**	Survey	
☑	Exhibits, data, reports or studies that may have been required as part of the approval process, including but not limited to: • Calculations relating to stormwater runoff; • Information on composition and quantity of water demand and wastewater generated; • Information on air, water or land pollutants to be discharged, including standards, quantity, treatment and/or controls; • Estimates of traffic generation and counts pre- and post-construction; • Estimates of noise generation; • A Stormwater Management and Erosion Control Plan; • Endangered species and archaeological / historical studies; • Wetland and water body (coastal and inland) delineations; • Environmental impact studies. **(2.5.3.2B)**	Survey	
☑	A document from each of the required private utility service providers indicating approval of the proposed site plan and indicating an ability to provide all required private utilities to the site. **(2.5.3.2D)**	Survey	

Final Site Plan Approval Required Information			
☑	**Required Items for Submittal**	**Item Location (e.g. Page/line or Plan Sheet/Note #)**	**Waiver Requested**
☐	A list of any required state and federal permit applications required for the project and the status of same. **(2.5.3.2E)**		N/A
☑	A note shall be provided on the Site Plan stating: "All conditions on this Plan shall remain in effect in perpetuity pursuant to the requirements of the Site Plan Review Regulations." **(2.5.4.2E)**	C-1.0	N/A
☑	For site plans that involve land designated as "Special Flood Hazard Areas" (SFHA) by the National Flood Insurance Program (NFIP) confirmation that all necessary permits have been received from those governmental agencies from which approval is required by Federal or State law, including Section 404 of the Federal Water Pollution Control Act Amendments of 1972, 33 U.S.C. 1334. **(2.5.4.2F)**	Survey	
☑	Plan sheets submitted for recording shall include the following notes: a. "This Site Plan shall be recorded in the Rockingham County Registry of Deeds." b. "All improvements shown on this Site Plan shall be constructed and maintained in accordance with the Plan by the property owner and all future property owners. No changes shall be made to this Site Plan without the express approval of the Portsmouth Planning Director." **(2.13.3)**	C-1.0	N/A

Applicant's Signature: Emily Roseberry **Date:** 11/15/2024