MCDONOUGH - PHASE 4
UTILITY and ROADWAY IMPROVEMENTS
PROJECT #7146
PORTSMOUTH, NEW HAMPSHIRE

FALL 2018

PREPARED FOR: DEPARTMENT OF PUBLIC WORKS
CITY OF PORTSMOUTH
680 PEVERLY HILL ROAD
PORTSMOUTH, NH 03801

PREPARED BY: SEAPORT ENGINEERING, LLC
PORTSMOUTH, NH 03801
WWW.SEAPORTENG.COM
603-498-8449

STATE OF NEW HAMPSHIRE
MARC R. BATCHELDER
No. 12526
LICENSED
PROFESSIONAL ENGINEER

SURVEY BY: AMBIT ENGINEERING, INC.
200 GRIFFIN ROAD, UNIT 3
PORTSMOUTH, NH 03801

GEOTECHNICAL BY: JOHN TURNER CONSULTING
19 DOVER STREET
DOVER, NH 03820

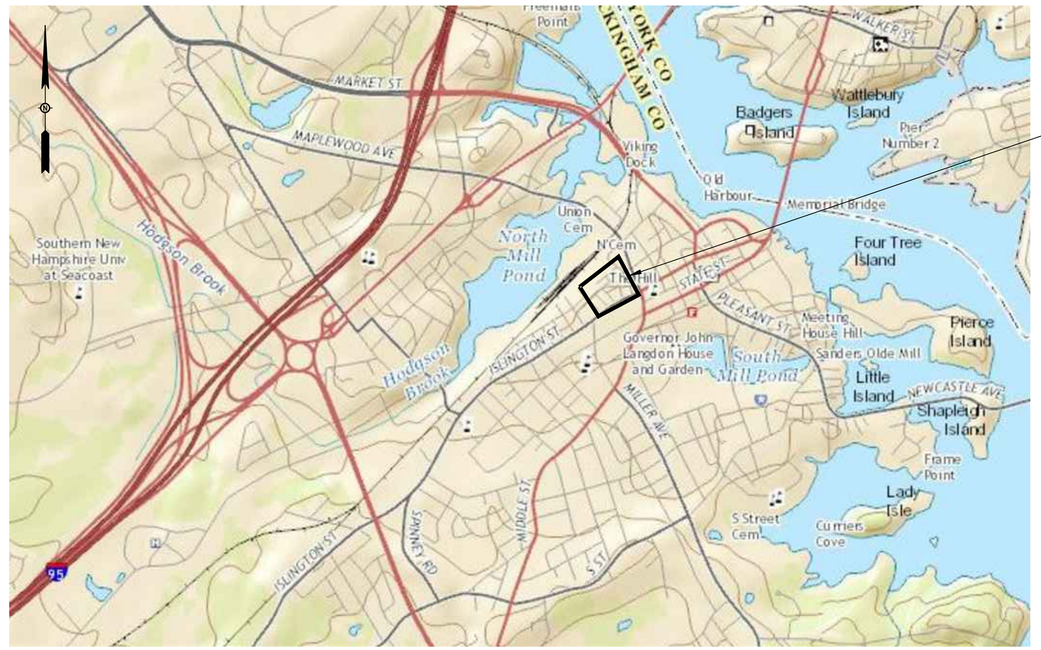

INDEX	SHEET NO.	LATEST REV.
GENERAL NOTES	C-001	
ROADWAY LAYOUT PLANS	C-100 to C-104	
PAVEMENT PLAN	C-200	
UTILITIES PLAN and PROFILE	C-300 to C-304	
ELECTRICAL PLAN & DETAILS	C-401	
DETAILED GRADING PLANS	C-501	
DETAILS SHEETS	C-601 to C-606	

ISSUED FOR BID
7/23/2018

DEMOLITION NOTES:

1. LOCATIONS OF UNDERGROUND UTILITIES ARE APPROXIMATE AND NOT GUARANTEED. CONTRACTOR SHALL LOCATE ALL UTILITIES, ANTICIPATE CONFLICTS, REPAIR AND/OR RELOCATE EXISTING UTILITIES REQUIRED TO COMPLETE THE WORK.
2. MATERIAL TO BE REMOVED SHALL BECOME THE PROPERTY OF THE CONTRACTOR UNLESS OTHERWISE NOTED. DISPOSAL SHALL BE IN ACCORDANCE WITH ALL FEDERAL, STATE AND LOCAL REGULATIONS.
3. ANY DAMAGE BY THE CONTRACTOR DURING DEMOLITION AND/OR CONSTRUCTION SHALL BE REPAIRS OR REPLACED BY THE CONTRACTOR AT NO ADDITIONAL COST TO THE OWNER.
4. CONTRACTOR SHALL OBTAIN AND PAY FOR ALL PERMITS AND FEES NECESSARY TO COMPLETE THE WORK.
5. CONTRACTOR SHALL REMOVE TREES AND BRUSH AS INDICATED AND AS REQUIRED FOR COMPLETION OF THE WORK. ALL STUBS SHALL BE REMOVED AND SURFACES GRUBBED WITHIN THE LIMITS OF WORK.
6. ALL WORK WITHIN THE PUBLIC RIGHT OF WAY SHALL BE COORDINATED WITH THE CITY OF PORTSMOUTH.
7. CONTRACTOR SHALL PROTECT ALL FIELD STONE WALLS, FENCES, MAILBOXES, STRUCTURES, ETC. THROUGHOUT THE COMPLETION OF THE WORK.
8. EROSION CONTROL MEASURES SHALL BE INSTALLED PRIOR TO THE START OF ANY CLEARING OR DEMOLITION WORK. THIS INCLUDES SILT FENCE / SILT SOCK AND INLET PROTECTION BARRIERS.
9. CONTRACTOR SHALL SAWCUT PAVEMENT AT EDGES OF TRENCHES FOR CLEAN VERTICAL EDGES.
10. CONTRACTOR SHALL PHASE DEMOLITION AND CONSTRUCTION AS REQUIRED TO PROVIDE CONTINUOUS ACCESS TO RESIDENTIAL PROPERTIES THROUGHOUT THE CONSTRUCTION PERIOD.
11. PAVEMENT RECLAMATION LIMITS ARE SHOWN FOR CONTRACTOR'S CONVENIENCE. ADDITIONAL RECLAMATION MAY BE REQUIRED. CONTRACTOR TO VERIFY FULL LIMITS OF PAVEMENT RECLAMATION.
12. CONTRACTOR SHALL REMOVE AND DISPOSE OF ALL EXISTING STRUCTURES, CONCRETE PADS, PAVEMENT, PIPES AND HEADWALLS WITHIN THE LIMITS OF CONSTRUCTION.
13. CONTRACTOR SHALL COORDINATE WITH ALL APPLICABLE UTILITIES. WORK ASSOCIATED WITH UTILITIES, BUT NOT LIMITED TO, RELOCATION OF UTILITY POLES.
14. CONTRACTOR SHALL NOTIFY DIG–SAFE 72 HOURS PRIOR TO ANY WORK STARTING. CONTRACTOR REQUIRED TO MAINTAIN AN ACTIVE DIG–SAFE PERMIT THROUGHOUT THE DURATION OF CONSTRUCTION.

GRADING NOTES:

1. CONTRACTOR SHALL PROVIDE A FINISH PAVEMENT SURFACE FREE OF LOW SPOTS AND PONDING AREAS. THE INTENT OF FINAL GRADING IS TO CREATE SIDEWALKS AND ROADS TO MATCH STOOPS OF HOMES AND GRADES OF EXISTING DRIVEWAYS TO THE BEST EXTENT POSSIBLE.
2. EXISTING MANHOLES AND CATCHBASINS WITHIN LIMITS OF CONSTRUCTION SHALL BE ADJUSTED TO FINISH GRADES.
3. ALL WATER SHUT OFF VALVES WITHIN THE LIMITS OF CONSTRUCTION SHALL BE ADJUSTED TO FINISH GRADES.
4. CONTRACTOR SHALL CLEAN ALL STRUCTURES WITHIN THE CONSTRUCTION LIMITS IMMEDIATELY UPON COMPLETION OF THE WORK. ALL SEDIMENT AND DEBRIS SHALL BE DISPOSED OF PER FEDERAL, STATE AND LOCAL REGULATIONS.
5. STORM DRAIN PIPING, UNLESS OTHERWISE NOTED, SHALL BE HIGH DENSITY POLTYETHYLENE (HANCOR HI–Q, ADS N–12 OR APPROVED EQUAL).
6. PROPOSED CATCHBASINS SHALL BE EQUIPPED WITH OIL/WATER SEPARATOR HOODS AND 2' SUMPS.
7. ALL DISTURBED AREAS THAT ARE NOT TO BE PAVED OR OTHERWISE TREATED SHALL RECEIVE 6" LOAM, SEED FERTILIZER AND MULCH.
8. CONTRACTOR SHALL PROVIDE THE FOLLOWING MINIMUM REQUIREMENTS FOR COMPACTION:

BELOW PAVEMENT AND CONCRETE AREAS:	95%
TRENCH BEDDING AND BACKFILL:	95%
BELOW LOAM AND SEED AREAS:	90%

COMPACTION PERCENTAGES SHALL BE THE MAXIMUM DRY DENSITY AT OPTIMUM MOISTURE CONTENT IN ACCORDANCE WITH ASTM D–1557, METHOD C. FIELD DENSITY TESTS SHALL BE CONDUCTED IN ACCORDANCE WITH ASTM D–1556 OR ASTM–2922.

9. STORM DRAIN CONSTRUCTION SHALL BE IN ACCORDANCE WITH THE STATE OF NEW HAMPSHIRE DEPARTMENT OF TRANSPORTATION (NHDOT) AND CITY OF PORTSMOUTH DPW STANDARD SPECIFICATIONS.
10. CONTRACTOR SHALL GRADE SLOPES TO THE LINES AND GRADES SHOWN ON THE PLANS. SLOPES STEEPER THAN 2:1 SHALL INCLUDE 6" RIP–RAP STONE FOR A DEPTH OF 18". SLOPES FROM 4:1 TO 2:1, CONTRACTOR SHALL PROVIDE A SLOPE STABILIZATION BLANKET.

SITE NOTES:

1. ALL DIMENSIONS ARE TO THE FACE OF CURB UNLESS OTHERWISE SPECIFIED.
2. ALL WORK SHALL CONFORM TO THE CITY OF PORTSMOUTH DEPARTMENT OF PUBLIC WORKS STANDARD SPECIFICATIONS.
3. CONTRACTOR SHALL PROVIDE AS–BUILT PLANS (MYLAR AND .DWG FORMAT AUTOCAD FILES) TO THE CITY OF PORTSMOUTH UPON COMPLETION OF THE PROJECT. AS–BUILT SHALL BE PREPARED AND CERTIFIED BY A LAND SURVEYOR OR PROFESSIONAL ENGINEER LICENSED IN THE STATE OF NEW HAMPSHIRE.
4. MATERIALS AND CONSTRUCTION SHALL COMPLY TO ALL APPLICABLE FEDERAL, STATE AND LOCAL CODES AND SPECIFICATIONS.
5. CONTRACTOR SHALL PROVIDE A LICENSED ENGINEER OR SURVEYOR TO DETERMINE ALL LINES AND GRADE.
6. CONTRACTOR IS RESPONSIBLE TO MAINTAIN ALL VERTICAL AN HORIZONTAL CONTROL FOR THE PROJECT.
7. PAVEMENT MARKINGS AND SIGNS SHALL CONFORM TO THE "MANUAL ON UNIFORM CONTROL DEVICES'. "STANDARD ALPHABETS FOR HIGHWAY SIGNS AND PAVEMENT MARKINGS".
8. CONTRACTOR SHALL SUBMIT A MAINTENANCE OF TRAFFIC PLAN TO THE CITY OF PORTSMOUTH FOR APPROVAL.
9. CONTRACTOR SHALL BE FAMILIAR WITH ALL AMERICAN WITH DISABILITY ACT (ADA) REQUIREMENTS FOR ACCESSIBILITY.
10. PAVEMENT MARKINGS SUCH AS CROSSWALKS, STOP BARS, LEGENDS AND SYMBOLS SHALL BE THERMOPLASTIC PER AASHTO M249. CENTERLINE AND EDGE STRIPING SHALL BE TRAFFIC PAINT PER AASHTO M248 TYPE 'F'. TRAFFIC PAINT COLOR AS INDICATED IN THE PLANS.

UTILITY NOTES:

1. CONTRACTOR SHALL IDENTIFY AND RECORD SWING TIES TO ALL EXISTING UTILITY STRUCTURES, INCLUDING, BUT NOT LIMITED TO WATER SHUT OFF VALVES, MANHOLES, FIRE HYDRANTS.
2. CONTRACTOR SHALL UTILITY WORK WITH THE APPROPRIATE UTILITY COMPANY.
   ELECTRIC – EVERSOURCE
   TELEPHONE – FAIRPOINT
   WATER/SEWER – CITY OF PORTSMOUTH
   GAS – UNITIL
3. LOCATIONS OF EXISTING UNDERGROUND UTILITIES ARE APPROXIMATE AND NOT GUARANTEED. CONTRACTOR SHALL LOCATE ALL UTILITIES, ANTICIPATE CONFLICTS, REPAIR AND/OR RELOCATE EXISTING UTILITIES REQUIRED TO COMPLETE THE WORK.
4. CONTRACTOR SHALL OBTAIN AND PAY FOR ALL REQUIRED PERMITS, ARRANGE ALL INSPECTIONS, AND SUBMIT CERTIFICATES OF ACCEPTANCE TO THE OWNER PRIOR TO COMPLETION OF THE PROJECT.
5. CONTRACTOR SHALL NOTIFY DIG–SAFE 72 HOURS PRIOR TO ANY WORK STARTING. CONTRACTOR REQUIRED TO MAINTAIN AN ACTIVE DIG–SAFE PERMIT THROUGHOUT THE DURATION OF CONSTRUCTION.
6. CONTRACTOR SHALL PROVIDE AND INSTALL ALL MANHOLES, CATCHBASINS, FRAMES, GRATES & COVERS, AND OTHER MISCELLANEOUS ITEMS NOT NECESSARILY DETAILED ON THESE DRAWINGS TO RENDER INSTALLATION OF THE UTILITY COMPLETE AND OPERATIONAL.
7. CONTRACTOR SHALL AS–BUILT PROPOSED STORM WATER DRAINAGE SYSTEM, TO INCLUDE ELEVATIONS OF RIM AND ALL INVERTS.
8. ALL HYDRANTS AND VALVES SHALL BE INSPECTED AND MUST MEET CITY OF PORTSMOUTH STANDARDS.
9. CONTRACTOR TO VERIFY SEWER AND WATER LATERAL LOCATIONS FOR TIE–INS AND COORDINATE WITH HOMEOWNERS.
10. MINIMUM OF 12" CLEARANCE BETWEEN ALL CROSSING UTILITIES. IN THE EVENT <12" IS NEEDED, RIGID INSULATION SHALL BE PLACED BETWEEN THE UTILITIES.
11. WATER CROSSING ABOVE SEWER SHALL HAVE A MINIMUM OF 18" CLEARANCE.
12. SEWER AND WATER MAINS SHALL BE SEPARATED HORIZONTALLY BY A MINIMUM OF 10'.
13. NEW FRAMES, GATE VALVES AND CURB STOPS SHALL BE ADJUSTED TO GRADE. ADJUSTMENTS (TEMP. & FINAL) ARE INCIDENTAL TO THE PAY ITEM.
14. REMOVAL OF EXISTING ABANDONED PIPE IN CONFLICT WITH NEW PIPE SHALL BE INCIDENTAL TO THE NE PIPE PAY ITEM.
15. NEW SEWER MAIN LOCATIONS ONLY – SEWER SERVICE LINES SHALL BE CONNECTED TO EXISTING AT CITY RIGHT–OF–WAY WITH A WYE EXTENDING VERTICALLY TO THE SURFACE. INSTALL CAST IRON MONUMENT & COVER (PROVIDED BY CITY) AT EACH LOCATION.
16. CONTRACTOR SHALL MAINTAIN ACCESS TO ALL UTILITY STRUCTURES THROUGHOUT THE PROJECT. AT THE CITY REQUEST, THE CONTRACTOR SHALL PROVIDE ADEQUATE ACCESS TO ANY STRUCTURE WHERE THEIR WORK IMPEDES ACCESS. THIS MAY INCLUDE EXCAVATING FOR STRUCTURES BURIED BY THE CONTRACTOR, AT NO ADDITIONAL COST TO THE CITY.

GRAVITY SEWER NOTES:

1. ORDERED EXCAVATION OF UNSUITABLE MATERIAL BELOW GRADE: BACKFILL AS STATED IN THE TECHNICAL SPECIFICATIONS OR AS SHOWN ON THE DRAWINGS.
2. BEDDING: SEE NOTE 7 OF STANDARD MANHOLE NOTES. WHERE ORDERED BY THE ENGINEER TO STABILIZE THE TRENCH BASE, GRADED SCREENED GRAVEL OR CRUSHED STONE 1/2 INCH TO 1–1/2 INCH SHALL BE USED.
3. SAND BLANKET: CLEAN SAND FREE FROM ORGANIC MATTER, SO GRADED THAT 90–100% PASSES A 1/2 INCH SIEVE AND NOT MORE THAN 15% WILL PASS A #200 SIEVE. NO STONE LARGER THAN 2" SHOULD BE IN CONTACT WITH THE PIPE.
4. SUITABLE MATERIAL: IN ROADS, ROAD SHOULDERS, WALKWAYS AND TRAVELED WAYS, SUITABLE MATERIAL FOR TRENCH BACKFILL SHALL BE THE NATURAL MATERIAL EXCAVATED DURING THE COURSE OF CONSTRUCTION, BUT SHALL EXCLUDE DEBRIS; PIECES OF PAVEMENT; ORGANIC MATTER; TOP SOIL; ALL WET OR SOFT MUCK, PEAT, OR CLAY; ALL EXCAVATED LEDGE MATERIAL; ALL ROCKS OVER 6 INCHES IN LARGEST DIMENSION; AND ANY MATERIAL WHICH, AS DETERMINED BY THE ENGINEER, WILL NOT PROVIDE SUFFICIENT SUPPORT OR MAINTAIN THE COMPLETED CONSTRUCTION IN A STABLE CONDITION. IN CROSS–COUNTRY CONSTRUCTION, SUITABLE MATERIAL SHALL BE AS DESCRIBED ABOVE, EXCEPT THAT THE ENGINEER MAY PERMIT THE USE OF TOP SOIL, LOAM, MUCK, OR PEAT, IF HE IS SATISFIED THAT THE COMPLETED CONSTRUCTION WILL BE ENTIRELY STABLE AND PROVIDED THAT EASY ACCESS TO THE SEWER, FOR MAINTENANCE AND POSSIBLY RECONSTRUCTION, WILL BE PRESERVED.
5. BASE COURSE AND PAVEMENT SHALL MEET THE REQUIREMENTS OF THE NEW HAMPSHIRE DEPARTMENT OF TRANSPORTATION'S LATEST EDITION OF THE STANDARD SPECIFICATIONS FOR HIGHWAYS AND BRIDGES – DIVISIONS 300 AND 400 RESPECTIVELY AND LOCAL REGULATION.
6. WOOD SHEETING, IF REQUIRED: WHERE SHEETING IS PLACED ALONGSIDE THE PIPE AND EXTENDS BELOW MID–DIAMETER, IT SHALL BE CUT OFF AND LEFT IN PLACE TO AN ELEVATION 1 FOOT ABOVE THE TOP OF PIPE. WHERE SHEETING IS ORDERED BY THE ENGINEER TO BE LEFT IN PLACE, IT SHALL BE CUT OFF AT LEAST 3 FEET BELOW FINISHED GRADE, BUT NOT LESS THAN 1 FOOT ABOVE THE TOP OF THE PIPE.
7. W = MAXIMUM ALLOWABLE TRENCH PAYMENT WIDTH FOR LEDGE EXCAVATION AND FOR ORDERED EXCAVATION BELOW GRADE. FOR PIPES 15 INCHES NOMINAL DIAMETER OR LESS, W SHALL BE NO MORE THAN 36 INCHES. FOR PIPES GREATER THAN 15 INCHES IN NOMINAL DIAMETER, W SHALL BE 24 INCHES PLUS PIPE OUTSIDE DIAMETER (O.D.) ALSO, W SHALL BE THE PAYMENT WIDTH.

ABBREVIATIONS:

R&R	REMOVE AND RESET
F&G	FRAME AND GRATE
F&C	FRAME AND COVER
ADJ	ADJUST FRAME

LEGEND:

EXISTING	PROPOSED	
		PROPERTY LINE
		RIGHT–OF–WAY
		BUILDING
		EDGE OF PAVEMENT
	VGC	CURB
		SIDEWALK (CONCRETE)
		SIDEWALK (OTHER)
		ADA RAMP
		ADA SYMBOL
		SIGN
		MAILBOX
	SWL	SINGLE WHITE LINE
	DYCL	DOUBLE YELLOW CENTERLINE
		RETAINING WALL
		LOOSE STONE WALL
		FENCE
		GUARDRAIL
		SHRUB
		TREE
		TEMPORARY BENCHMARK
53	52	1' CONTOUR
		WETLANDS
A 14		WETLANDS BOUNDARY
D		DRAINAGE
W W	W W	WATER
S S	S S	GRAVITY SEWER
UT	UT	UNDERGROUND TELE.
UGE	PE PE	U/G POWER
	PE&C PE&C	U/G POWER & COMM.
OHW		OVERHEAD WIRES
GAS GAS	GAS GAS	GAS
		FIRE HYDRANT
		UTILITY POLE
		UTILITY POLE w/ LIGHT
		CATCHBASIN
T D S	D S	MANHOLE
		WATER SHUT OFF
		WATER VALVE
		RIP–RAP APRON
		EROSION CONTROL
		SAWCUT
	B1	BORING LOCATION

NO.	DESCRIPTION	APP'D	DATE
0	ISSUED FOR BID	MRB	07/23/18

REVISIONS

STATE OF NEW HAMPSHIRE – MARC R. BATCHELDER No. 15265 – PROFESSIONAL ENGINEER

DATE: MARCH 2, 2018
SCALE: 1:20
PROJECT NO.: CoP-010

MARC R. BATCHELDER, PE
ENGINEER OF RECORD

FOR: McDonough Street Phase 4 Utility & Roadway Improvements Portsmouth, NH

Seaport Engineering, LLC
PORTSMOUTH, NH
(603) 498-8449
www.seaporteng.com

TITLE: GENERAL NOTES and LEGEND

C-001

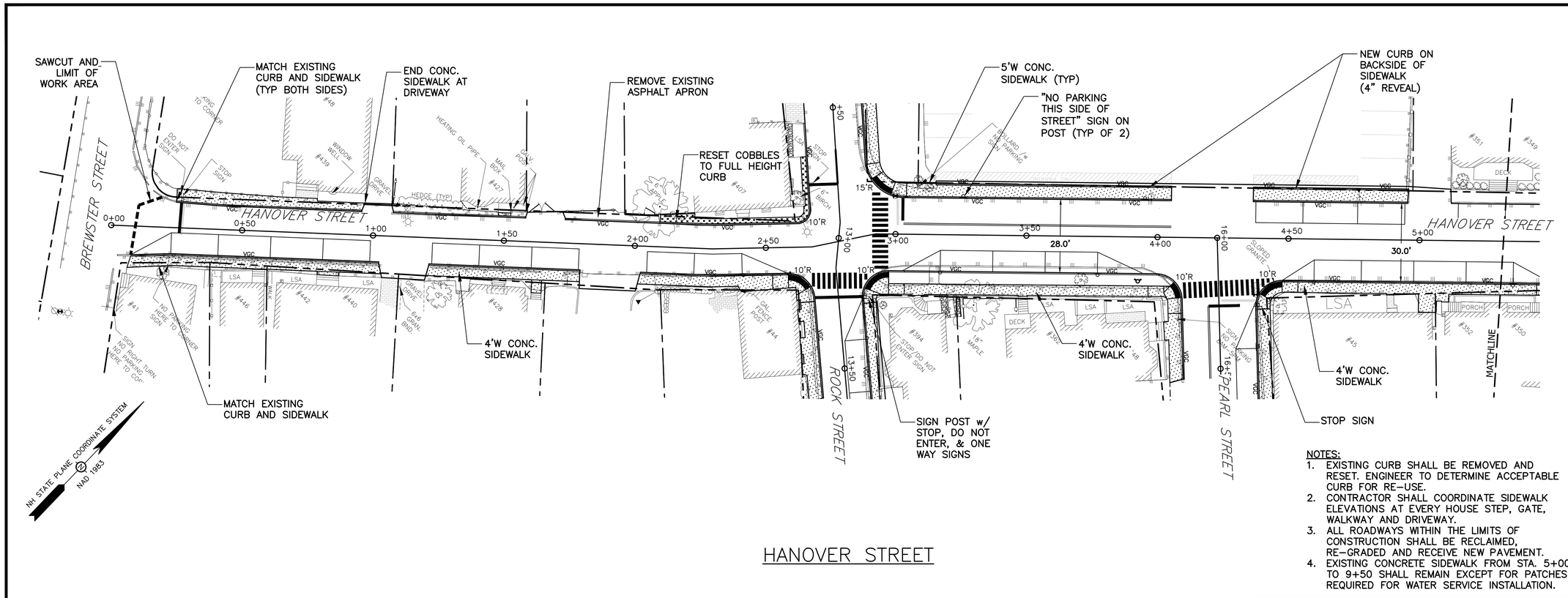

HANOVER STREET

NOTES:

1. EXISTING CURB SHALL BE REMOVED AND RESET. ENGINEER TO DETERMINE ACCEPTABLE CURB FOR RE-USE.
2. CONTRACTOR SHALL COORDINATE SIDEWALK ELEVATIONS AT EVERY HOUSE STEP, GATE, WALKWAY AND DRIVEWAY.
3. ALL ROADWAYS WITHIN THE LIMITS OF CONSTRUCTION SHALL BE RECLAIMED, RE-GRADED AND RECEIVE NEW PAVEMENT.
4. EXISTING CONCRETE SIDEWALK FROM STA. 5+00 TO 9+50 SHALL REMAIN EXCEPT FOR PATCHES REQUIRED FOR WATER SERVICE INSTALLATION.

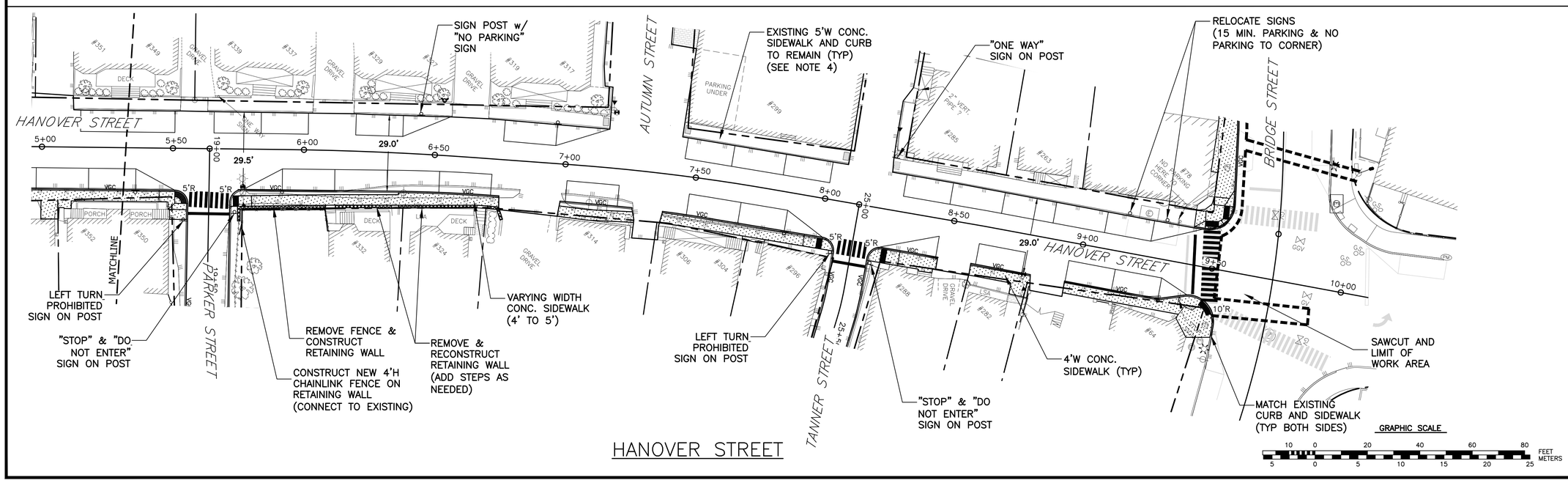

HANOVER STREET

NO.	DESCRIPTION	APP'D	DATE
0	ISSUED FOR BID	MRB	07/23/18

REVISIONS

STATE OF NEW HAMPSHIRE – MARC R. BATCHELDER No. 12528 – PROFESSIONAL ENGINEER

DATE: MARCH 2, 2018
SCALE: 1:20
PROJECT NO.: CoP-010

MARC R. BATCHELDER, PE
ENGINEER OF RECORD

FOR: McDonough Street Phase 4 Utility & Roadway Improvements Portsmouth, NH

Seaport Engineering, LLC
PORTSMOUTH, NH
(603) 498-8449
www.seaporteng.com

TITLE: ROADWAY LAYOUT PLAN HANOVER STREET

C-101

NOTES:
1. SEE NOTES ON C-101.

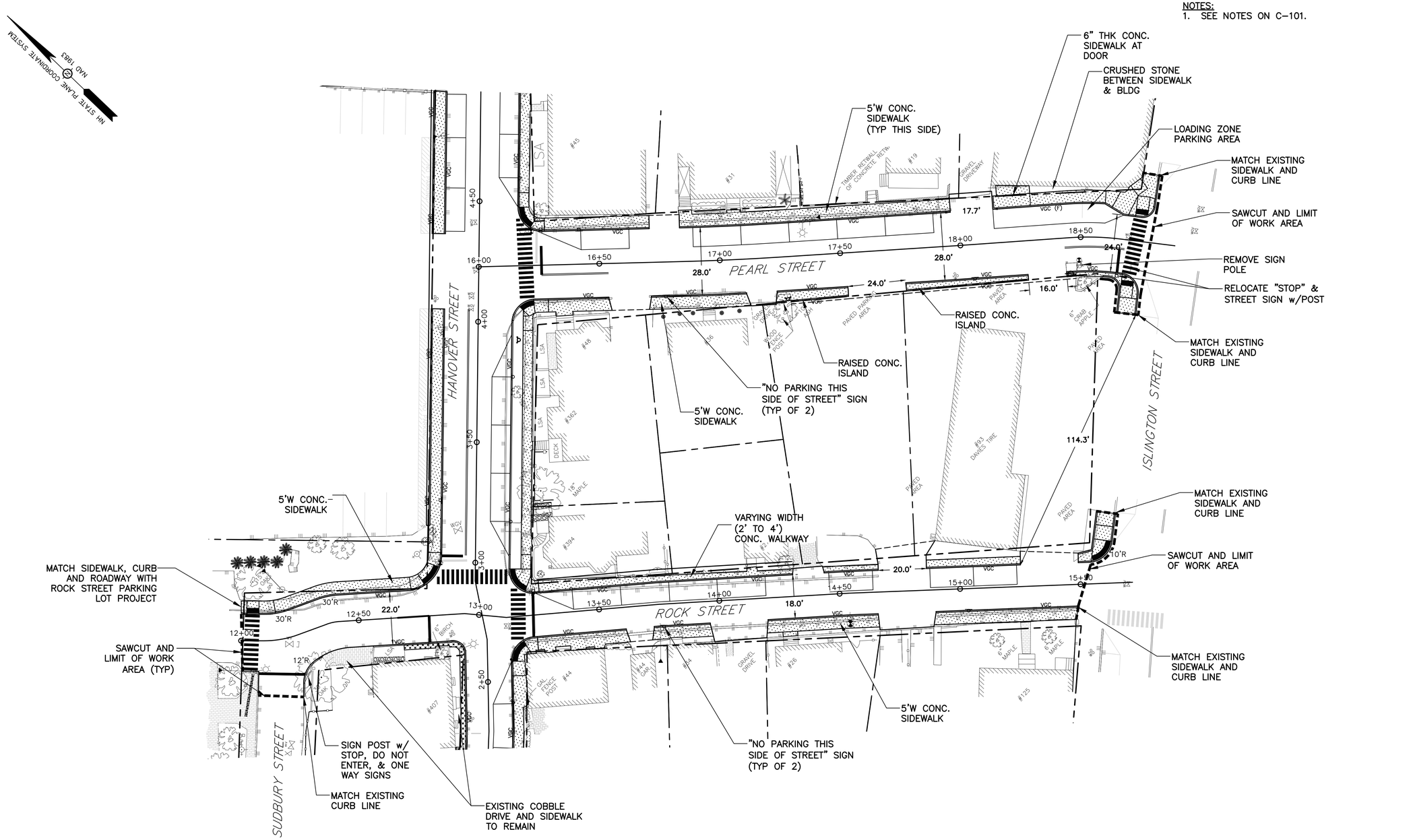

PEARL STREET and ROCK STREET

GRAPHIC SCALE
10 0 20 40 60 80 FEET
5 0 5 10 15 20 25 METERS

NO.	DESCRIPTION	APP'D	DATE
0	ISSUED FOR BID	MRB	07/23/18

REVISIONS

STATE OF NEW HAMPSHIRE – MARC R. BATCHELDER No. 12528 – PROFESSIONAL ENGINEER

DATE: MARCH 2, 2018
SCALE: 1:20
PROJECT NO.: CoP-010

MARC R. BATCHELDER, PE
ENGINEER OF RECORD

FOR: McDonough Street Phase 4 Utility & Roadway Improvements Portsmouth, NH

Seaport Engineering, LLC
PORTSMOUTH, NH
(603) 498-8449
www.seaporteng.com

TITLE: ROADWAY LAYOUT PLAN ROCK STREET and PEARL STREET

C-102

NOTES:
1. SEE NOTES ON C-101.

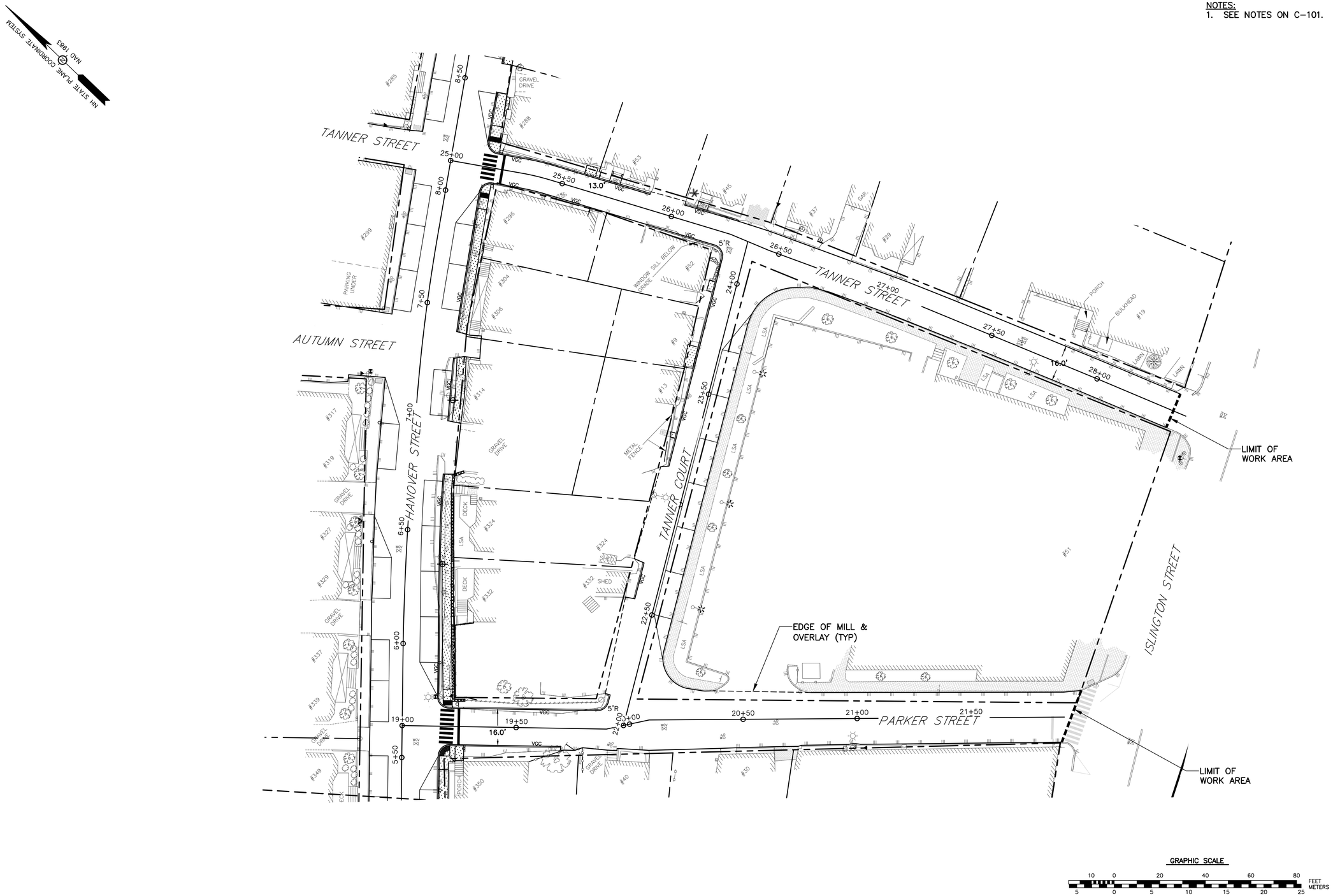

NO.	DESCRIPTION	APP'D	DATE
0	ISSUED FOR BID	MRB	07/23/18

REVISIONS

STATE OF NEW HAMPSHIRE - MARC R. BATCHELDER No. 12526 - LICENSED PROFESSIONAL ENGINEER

DATE: MARCH 2, 2018
SCALE: 1:20
PROJECT NO.: CoP-010

MARC R. BATCHELDER, PE
ENGINEER OF RECORD

FOR: McDonough Street Phase 4 Utility & Roadway Improvements Portsmouth, NH

Seaport Engineering, LLC
PORTSMOUTH, NH
(603) 498-8449
www.seaporteng.com

TITLE: ROADWAY LAYOUT PLAN PARKER ST., TANNER ST., AUTUMN ST. and TANNER CT.

C-103

NOTES:
1. SEE NOTES ON C-101.

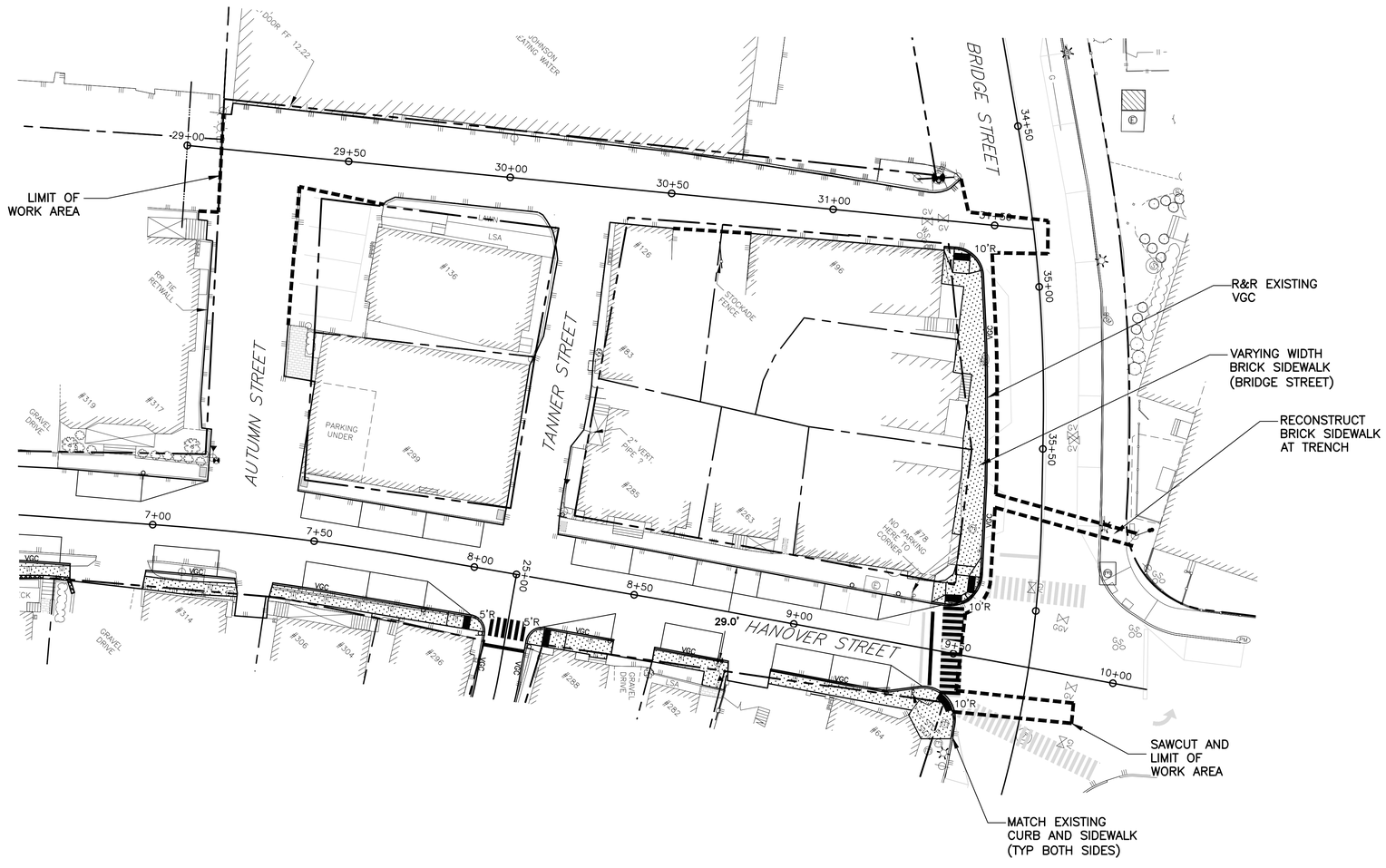

HILL STREET, BRIDGE STREET, AUTUMN STREET & TANNER STREET

GRAPHIC SCALE

20 10 0 20 40 60 80 FEET
5 0 5 10 15 20 25 METERS

NO.	DESCRIPTION	APP'D	DATE
0	ISSUED FOR BID	MRB	07/23/18

REVISIONS

STATE OF NEW HAMPSHIRE ~ MARC R. BATCHELDER No. 12526 ~ LICENSED PROFESSIONAL ENGINEER

DATE: MARCH 2, 2018
SCALE: 1:20
PROJECT NO.: CoP-010

MARC R. BATCHELDER, PE
ENGINEER OF RECORD

FOR: McDonough Street Phase 4 Utility & Roadway Improvements Portsmouth, NH

Seaport Engineering, LLC
PORTSMOUTH, NH
(603) 498-8449
www.seaporteng.com

TITLE: ROADWAY LAYOUT PLAN HILL ST., BRIDGE ST., AUTUMN ST. & TANNER ST.

C-104

NOTES:
1. SEE DETAIL SHEET FOR NOTES REGARDING RECLAIMING AND MILL & OVERLAY ACTIVITIES.

NH STATE PLANE COORDINATE SYSTEM
NAD 1983

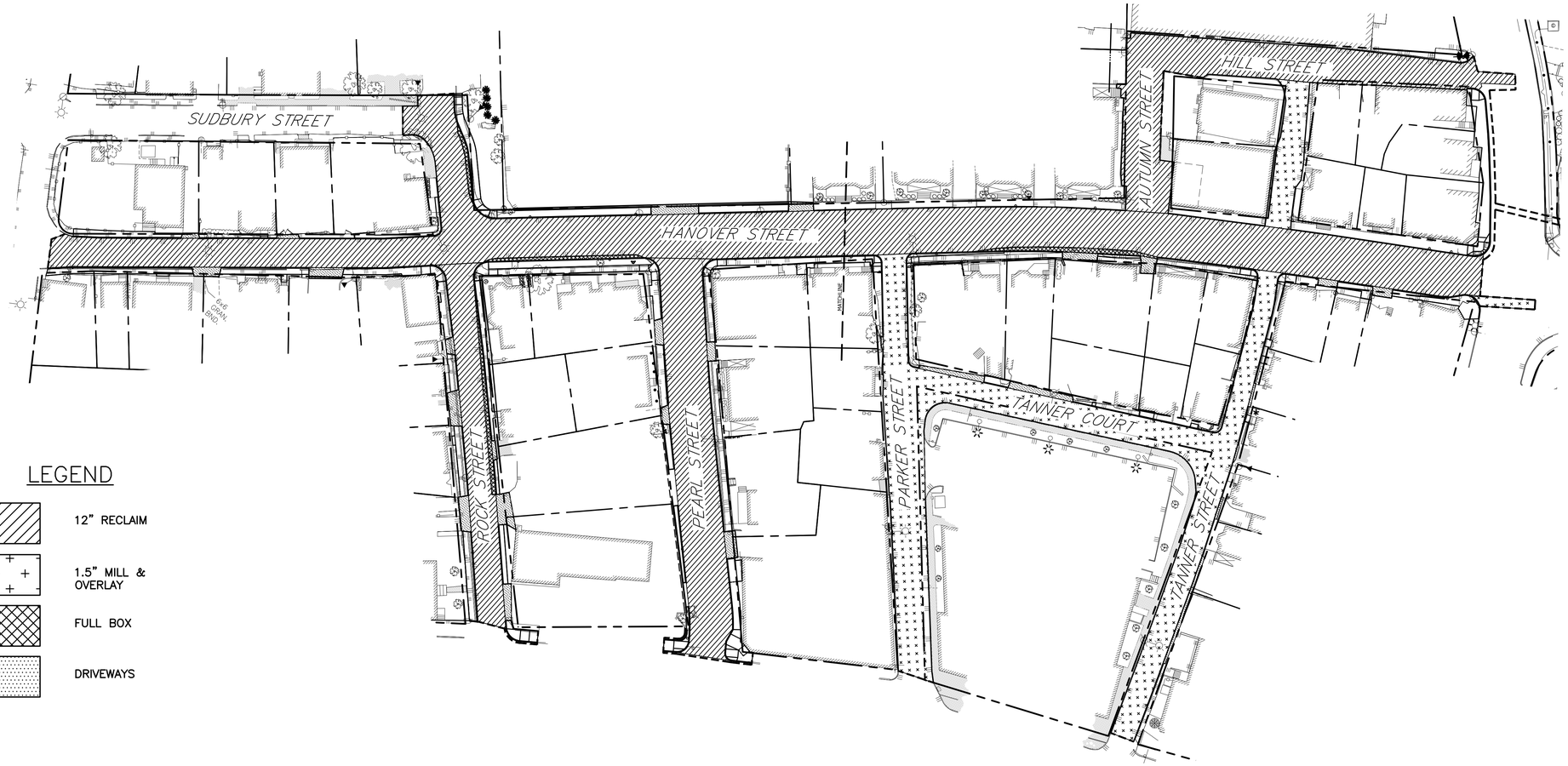

LEGEND

- 12" RECLAIM
- 1.5" MILL & OVERLAY
- FULL BOX
- DRIVEWAYS

PROJECT PAVEMENT PLAN

GRAPHIC SCALE
40 20 0 40 80 120 160 FEET
10 0 10 20 30 40 50 METERS

NO.	DESCRIPTION	APP'D	DATE
0	ISSUED FOR BID	MRB	07/23/18

REVISIONS

STATE OF NEW HAMPSHIRE · MARC R. BATCHELDER No. 12526 · PROFESSIONAL ENGINEER

DATE: MARCH 2, 2018
SCALE: 1:20
PROJECT NO.: CoP-010

MARC R. BATCHELDER, PE
ENGINEER OF RECORD

FOR: McDonough Street Phase 4 Utility & Roadway Improvements Portsmouth, NH

Seaport Engineering, LLC
PORTSMOUTH, NH
(603) 498-8449
www.seaporteng.com

TITLE: PAVEMENT PLAN

C-200

DRAIN STRUCTURE TABLE

STRUCTURE	RIM ELEV.	INV. ELEV. IN / INV. ELEV. OUT	PIPE SIZE & TYPE
CB AEI 1 (NEW F&G)	11.97	8.57 8.62	10" CPP (NW) 12" CPP (SE)
		8.32	15" CPP (NE)
CB AEI 2 (NEW F&G)	11.40	–	–
		9.00	10" CPP (SE)
CB AEI 3	20.78	15.33	12" CPP (SE)
		15.23	12" CPP (NW)
CB AEI 4	24.27	–	–
		20.17	12" CPP (NW)
CB AEI 5	24.95	–	–
		23.25	4" PVC (SW)
CB 1315 SITLED	13.45	–	–
		11.05±	12" CMP (E)
CB 1316 SILTED	14.03	10.83±	12" CMP (W)
		10.83±	15" CMP (NE)
CB 1317 SILTED	14.12	–	–
		10.97±	12" CMP (NW)
CB 1318 SILTED	13.65	10.65± 10.65± 10.65±	12" CMP (NW) 15" CMP (SW) 15" CMP (SE)
		–	–
CB 1319 SILTED	13.05	–	–
		10.65±	12" CMP (SE)
CB 1321	15.48	–	–
		12.42	8" CMP (W)
CB 1322 (REMOVE)	15.77	13.27	8" PVC (NE)
		12.67	15" CMP (SW)
CB 1323	17.54	–	–
		16.47	8" PVC (SW)
CB 1331	26.42	–	–
		24.92	(SE)
CB 1339 (REMOVE)	18.87	–	–
		15.67	12" CMP (W)
CB 1354	8.00	–	–
CB 1355	8.12	–	–
CB 1356 (NEW F&G)	9.31	–	–
		7.21	12" CPP (SE)
CB 1357 (NEW F&G)	9.87	6.97 6.22	12" CPP (NW) 15" CPP (SW)
		5.97	18" CPP (NE)
CB 3522	10.10	–	–
		7.52±	12" RCP (NE)
CB 3527	8.75	5.02	12" (NE)
		5.02	12" (SSE)
DMH 3541	10.26	7.52± 7.52± 2.10	12" RCP (SW) 12" RCP (SE) 36" (S)
		1.96	36" (NE)
CB 3542	9.44	2.61	36" (SE)
		2.21	36" (N)
CB 4430	14.83	11.63	15" CMP (NE)
		11.58	15" CMP (SW)
CB 4432	24.93	–	–
		21.83	6" VCP (SW)
CB 4552 (REMOVE)	17.55	13.69	12" CPP (SE)
		13.25	14" PVC (NE)
CB 4553 (REMOVE)	17.47	14.22	8" CPP (SE)
		13.94	12" CPP (NW)
CB 4569	11.43	–	–
		8.43	4" VCP (NW)
CB 4977 (REMOVE)	19.92	–	–
		17.92	6" PVC (SW)
DMH 4983	8.47	–	–
DMH 5383 (REMOVE)	18.93	13.53	14" CPP (SW)
		13.23	20" CPP (NW)

SEWER STRUCTURE TABLE

STRUCTURE	RIM ELEV.	INV. ELEV. IN / INV. ELEV. OUT	PIPE SIZE & TYPE
SMH AEI 1 (CLEANOUT)	25.18	DEPTH 19.88	–
		–	–
SMH AEI 2	26.31	21.99 (CENTER)	6" PVC (SW)
		–	6" VCP (NW)
SMH AEI 3	22.49	17.20 (CENTER)	8" PVC (SE)
		–	8" PVC (NW)
SMH AEI 4	14.83	9.58	8" PVC(SE)
		9.56	8" PVC (NW)
SMH AEI 5 (CLEANOUT)	7.78	–	–
		–	–
SMH AEI 6	7.87	1.65	12" PVC (SE)
		1.42	12" PVC (NW)
SMH AEI 7	10.33	–	–
		–	–
SMH 1454	15.75	9.50 7.45	15" PVC (SE) 8" VCP (NE)
		7.45	12" VCP (NW)
SMH 1483 (REMOVE)	19.30	15.64 13.60 13.55	12" PVC (E) 8" VCP (NE) 8" VCP (SE)
		13.55	8" VCP (SW)
SMH 1485	9.91	6.29	8" VCP (SW)
		5.96	8" VCP (NE)
SMH 1486	17.05	13.45	6" VCP (NW)
		13.40	8" VCP (NE)
SMH 1488	10.39		
SMH 1489 (SILTED)	9.52	2.27 (CENTER)	18" VCP (SE)
			15" VCP (NW)
SMH 1491	10.13	0.63 0.53	21" VC (SE) 14" VC (S)
		0.54	21" VC (NE)
SMH 1492	11.20	3.55 N/A −1.30	6" PVC 21" VC 48" BRICK BOX
		−1.30	48" BRICK BOX
SMH 1492A	10.57	1.97	12" ? (SW)
		−1.03	48" BRICK BOX
SMH 1493	10.07	2.52	15" VC (NE)
		2.42	15" VC (NW)
SMH 2299	19.95	14.35	8" PVC (SE)
		14.30	15" PVC (NE)
SMH 2300	8.39	1.59 1.59	8" VCP (SW) 14" VCP (SE)
		1.59	14" AC (NW)
SMH 2301 (SILTED)	9.46	4.66 (CENTER)	15" PVC (SW) 15" VCP (SE)
			14" VCP (NW)
SMH 2303 (NEW F&G)	11.57	6.27 5.97	8" PVC (SE) 15" PVC (SW)
		5.77	15" PVC (NE)
SMH 2805	24.88	18.46 16.08 15.28	12" PVC (E) 6" PVC (SW) 14" PVC (SE)
		15.03	15" PVC (NW)
SMH 5317	8.29	1.34	14" AC (SE)
		1.12	14" AC (NW)
SMH 5318	9.88	0.63	21" VC (SE)
		0.43	21" VC (NW)
SMH 5928	10.54		

NOTES:
1. CONTRACTOR SHALL SUBMIT A TEMPORARY WATER MAIN PLAN. TEMPORARY WATER MAIN SHALL BE SIZED TO PROVIDE TEMPORARY HYDRANTS AND SERVICE TO ALL BUILDINGS AFFECTED BY NEW WATER MAIN.

WATER AND SEWER SERVICE LATERAL SCHEDULE:

Sheet No.	Street Name	House No.	6"ø PVC Sewer Pipe (LF)	Sewer Connection w/Cleanout (EA)	1"ø Cu Water Service (LF)	2"ø Cu Water Service (LF)	1"ø Water Connection w/Curb Stop (EA)	2"ø Water Connection w/Curb Stop (EA)	Notes
C-301	Brewster	41	4	-	9	-	1	-	Verify location in field
C-301	Hanover	446	4	-	15	-	1	-	
C-301	Hanover	442	4	-	11	-	1	-	Verify location in field
C-301	Hanover	440	4	-	11	-	1	-	Verify location in field
C-301	Hanover	439	4	-	15	-	1	-	
C-301	Hanover	428	4	-	6	-	1	-	
C-301	Hanover	427	4	-	-	-	-	-	Water Service on Sudbury St.
C-301	Islington	133	-	-	-	9	-	1	Condominium - Verify Size in Field
C-301	Hanover	407	4	-	19	-	1	-	
C-301	Rock	44	-	-	4	-	1	-	
C-301	Hanover	394	-	-	29	-	1	-	
C-301	Hanover	362	25	1	27	-	1	-	
C-301	Pearl	48	-	-	-	-	-	-	Verify location in field
C-301	Pearl	45	-	-	-	24	-	1	
C-301	Hanover	352	-	-	22	-	1	-	Verify location in field
C-301	Hanover	351	-	-	-	-	-	-	Water Service on Hill St.
C-302	Hanover	350	-	-	13	-	1	-	Verify location in field
C-302	Hanover	349	-	-	-	-	-	-	Water Service on Hill St.
C-302	Hanover	339	-	-	-	-	-	-	Water Service on Hill St.
C-302	Hanover	337	-	-	-	-	-	-	Water Service on Hill St.
C-302	Hanover	332	-	-	19	-	1	-	
C-302	Hanover	329	-	-	-	-	-	-	Water Service on Hill St.
C-302	Hanover	327	-	-	-	-	-	-	Water Service on Hill St.
C-302	Hanover	324	-	-	(2) 16	-	2	-	Verify both services are active
C-302	Hanover	319	-	-	-	-	-	-	Water Service on Hill St.
C-302	Hanover	317	-	-	-	-	-	-	Water Service on Hill St.
C-302	Hanover	314	-	-	21	-	1	-	Verify location in field
C-302	Hanover	306	-	-	24	-	1	-	
C-302	Hanover	304	-	-	26	-	1	-	
C-302	Hanover	299	-	-	7	11	1	1	Verify size of second service in field
C-302	Hanover	296	-	-	30	-	1	-	
C-302	Hanover	288	-	-	-	-	-	-	Verify location in field
C-302	Hanover	285	-	-	5	-	1	-	
C-302	Hanover	282	-	-	5	-	1	-	
C-302	Hanover	263	-	-	26	-	1	-	
C-302	Bridge	78	-	-	-	-	-	-	Verify location in field
C-302	Bridge	64	-	-	9	-	1	-	
C-304	Bridge	96	-	-	6	-	1	-	
C-304	Hill	126	-	-	9	-	1	-	
C-304	Hill	136	-	-	(2) 12'	-	2	-	
-	-	-	-	-	-	-	-	-	

NO.	DESCRIPTION	APP'D	DATE
0	ISSUED FOR BID	MRB	07/23/18

REVISIONS

STATE OF NEW HAMPSHIRE - MARC R. BATCHELDER No. 12526 - LICENSED PROFESSIONAL ENGINEER

DATE: MARCH 2, 2018
SCALE: 1:20
PROJECT NO.: CoP-010

MARC R. BATCHELDER, PE
ENGINEER OF RECORD

FOR: McDonough Street Phase 4 Utility & Roadway Improvements Portsmouth, NH

Seaport Engineering, LLC
PORTSMOUTH, NH
(603) 498-8449
www.seaporteng.com

TITLE: EXISTING STRUCTURE TABLES AND UTILITY SCHEDULES

C-300

NOTES:
1. TIE-IN TO EXISTING 12"ø SEWER MAIN AT BREWSTER STREET SHALL BE DONE WITH INSIDE PIPE ECCENTRIC BOOT.
2. SEWER LATERALS SHOWN ARE ESTIMATES TO THEIR LOCATION. CONTRACTOR TO VERIFY FOR REPLACEMENTS.

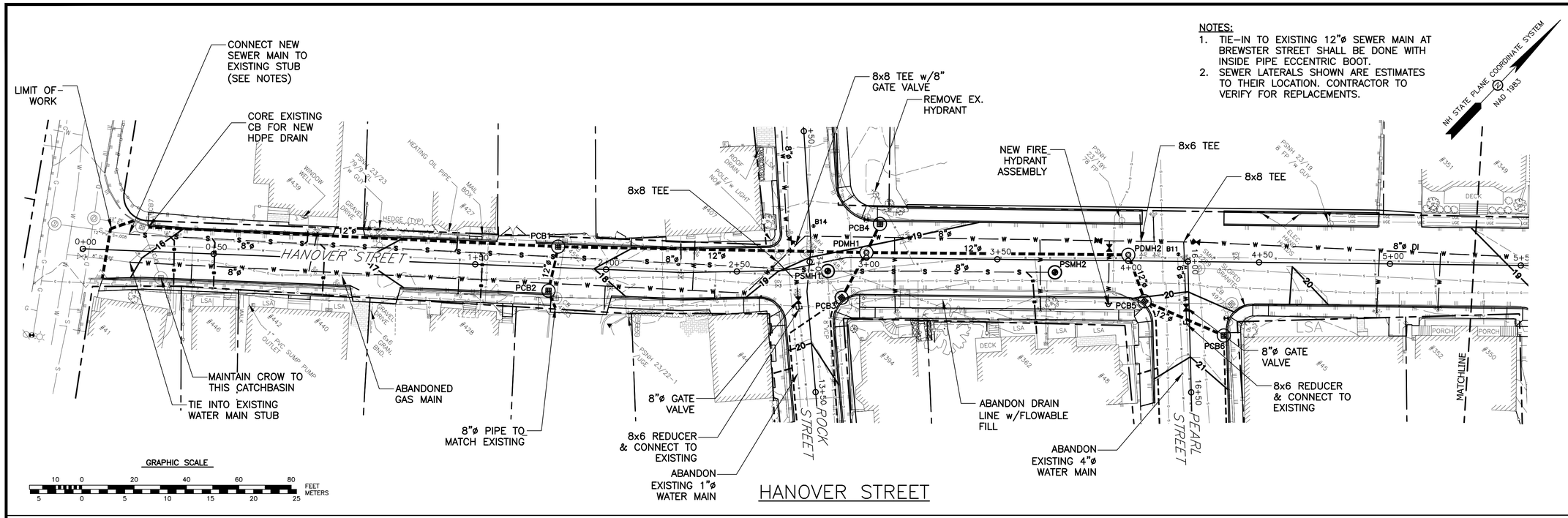

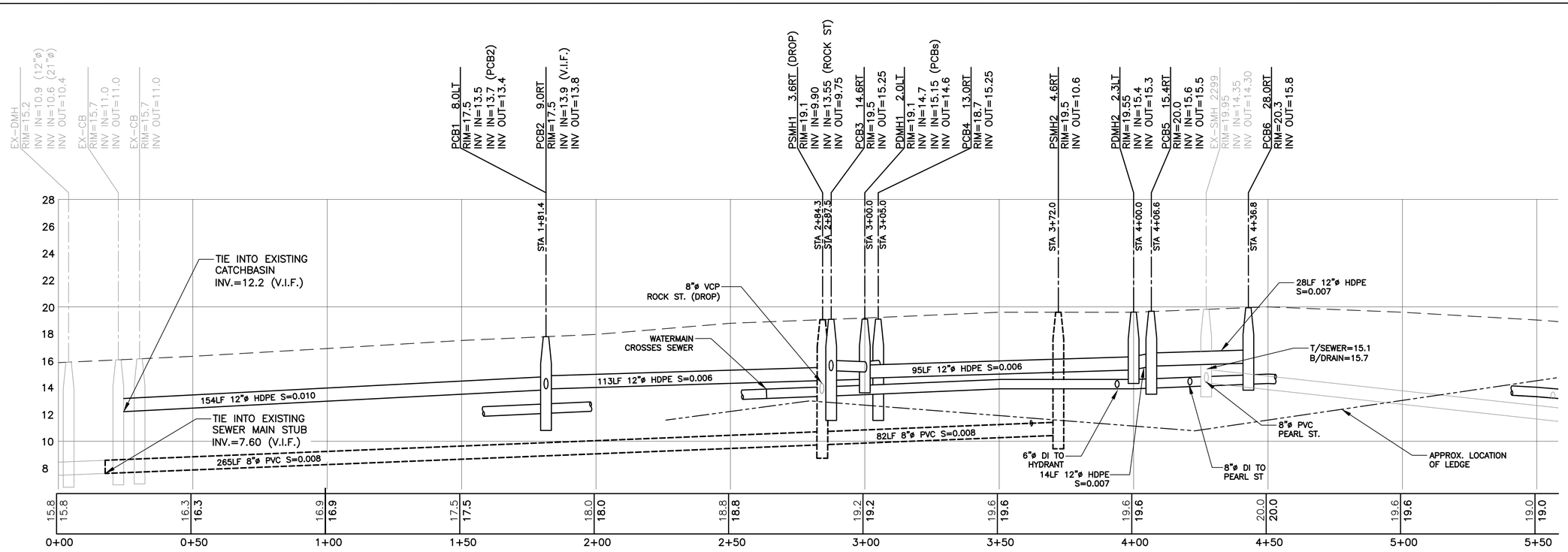

NO.	DESCRIPTION	APP'D	DATE
0	ISSUED FOR BID	MRB	07/23/18

REVISIONS

STATE OF NEW HAMPSHIRE - PROFESSIONAL ENGINEER - MARC R. BATCHELDER No. 12526

DATE: MARCH 2, 2018
SCALE: 1:20
PROJECT NO.: CoP-010

MARC R. BATCHELDER, PE
ENGINEER OF RECORD

FOR: McDonough Street Phase 4 Utility & Roadway Improvements Portsmouth, NH

Seaport Engineering, LLC
PORTSMOUTH, NH
(603) 498-8449
www.seaporteng.com

TITLE: UTILITY & GRADING PLAN HANOVER STREET

C-301

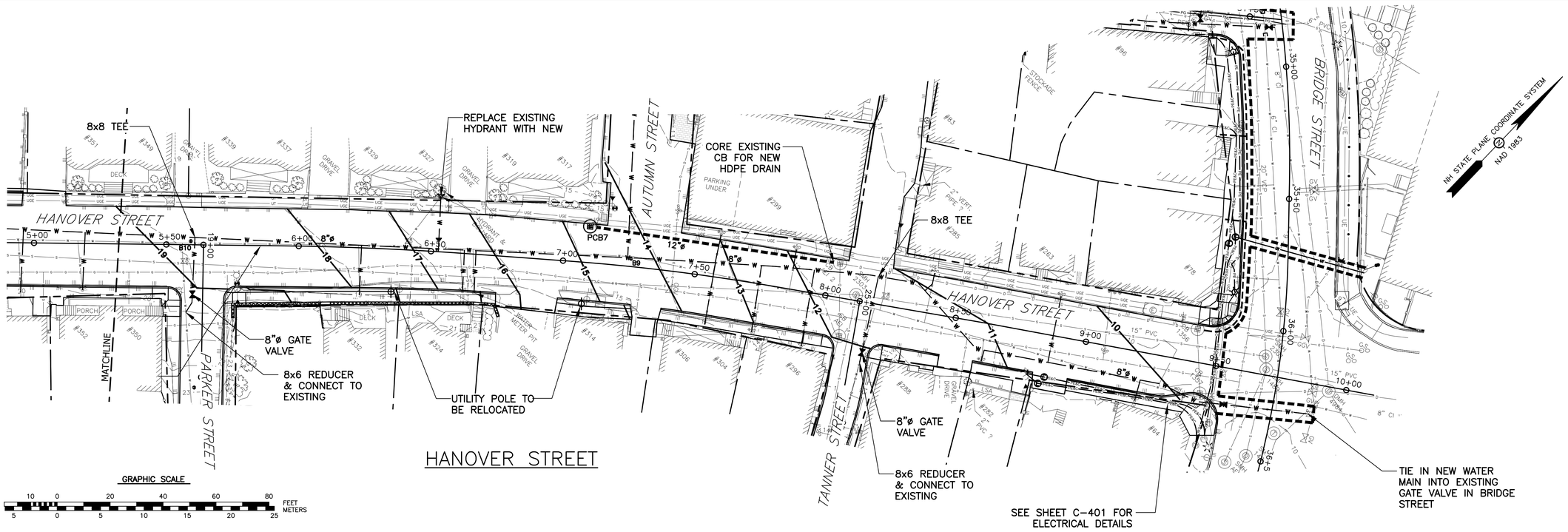

HANOVER STREET

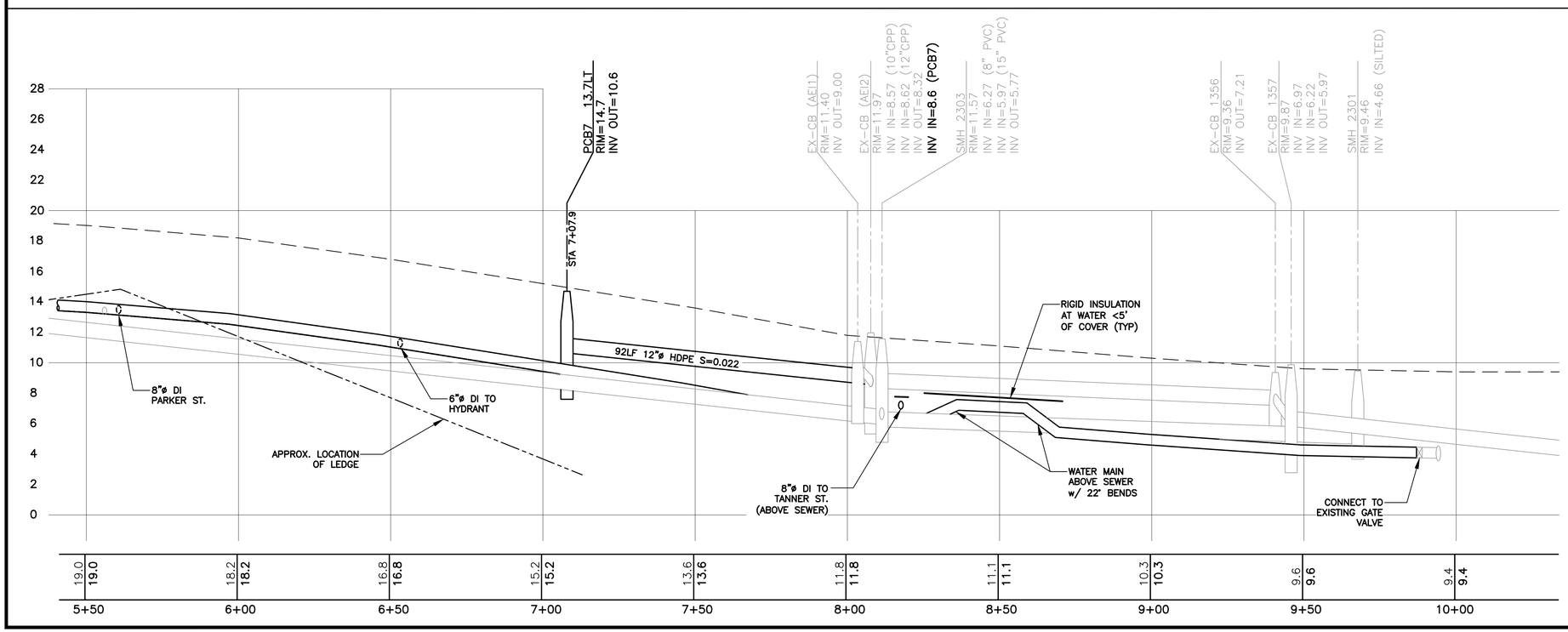

NO.	REVISIONS	APP'D	DATE
0	ISSUED FOR BID	MRB	07/23/18

DATE: MARCH 2, 2018
SCALE: 1:20
PROJECT NO.: CoP-010

MARC R. BATCHELDER, PE
ENGINEER OF RECORD

FOR: McDonough Street Phase 4 Utility & Roadway Improvements Portsmouth, NH

Seaport Engineering, LLC
PORTSMOUTH, NH
(603) 498-8449
www.seaporteng.com

TITLE: UTILITY & GRADING PLAN HANOVER STREET

C-302

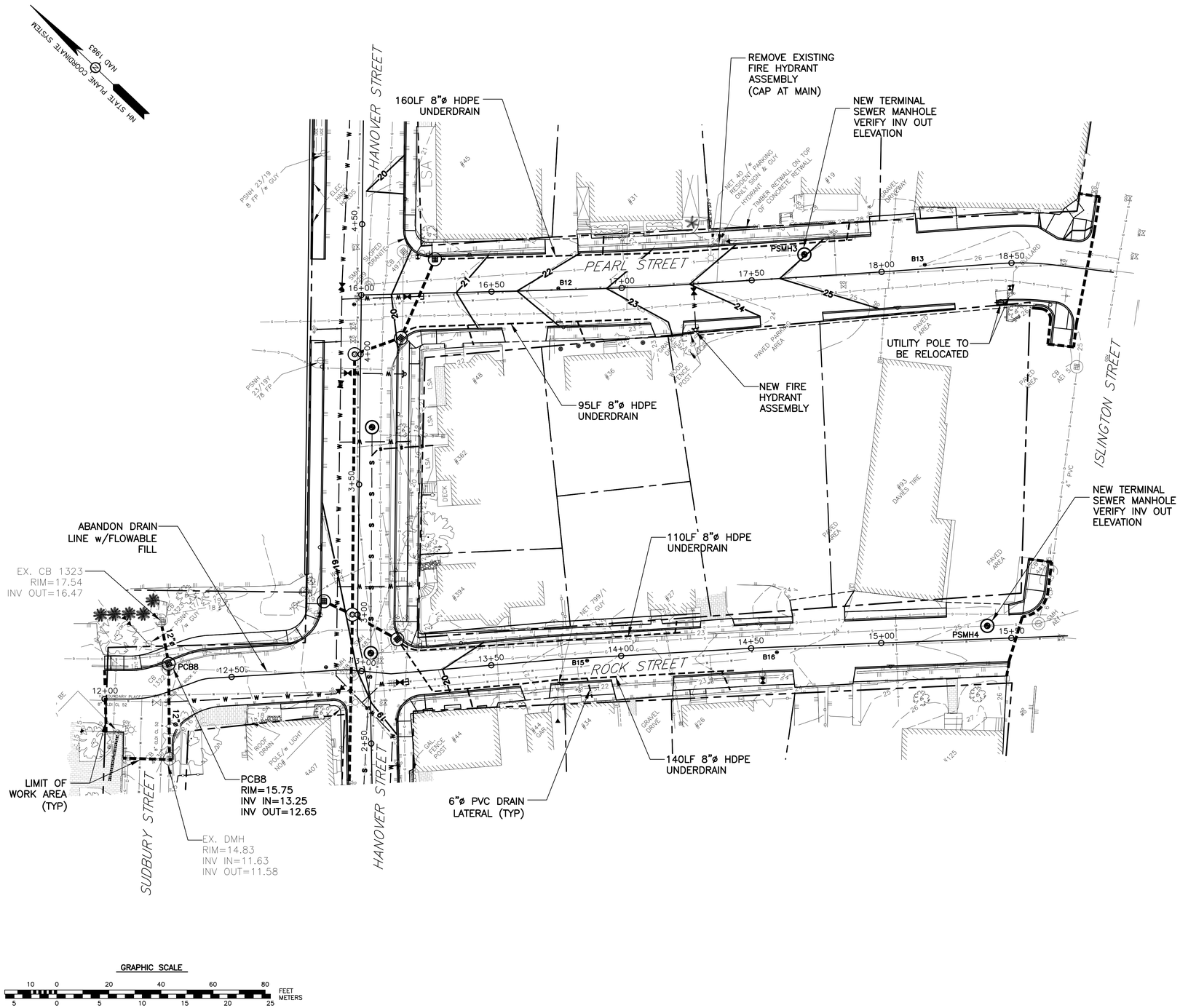

NO.	DESCRIPTION	APP'D	DATE
0	ISSUED FOR BID	MRB	07/23/18

STATE OF NEW HAMPSHIRE
MARC R. BATCHELDER
No. 12526
LICENSED
PROFESSIONAL ENGINEER

DATE: MARCH 2, 2018
SCALE: 1:20
PROJECT NO.: CoP-010

MARC R. BATCHELDER, PE
ENGINEER OF RECORD

FOR:
McDonough Street
Phase 4
Utility & Roadway
Improvements
Portsmouth, NH

Seaport
Engineering, LLC
PORTSMOUTH, NH
(603) 498-8449
www.seaporteng.com

TITLE:
UTILITY & GRADING PLAN
ROCK STREET & PEARL STREET

C-303

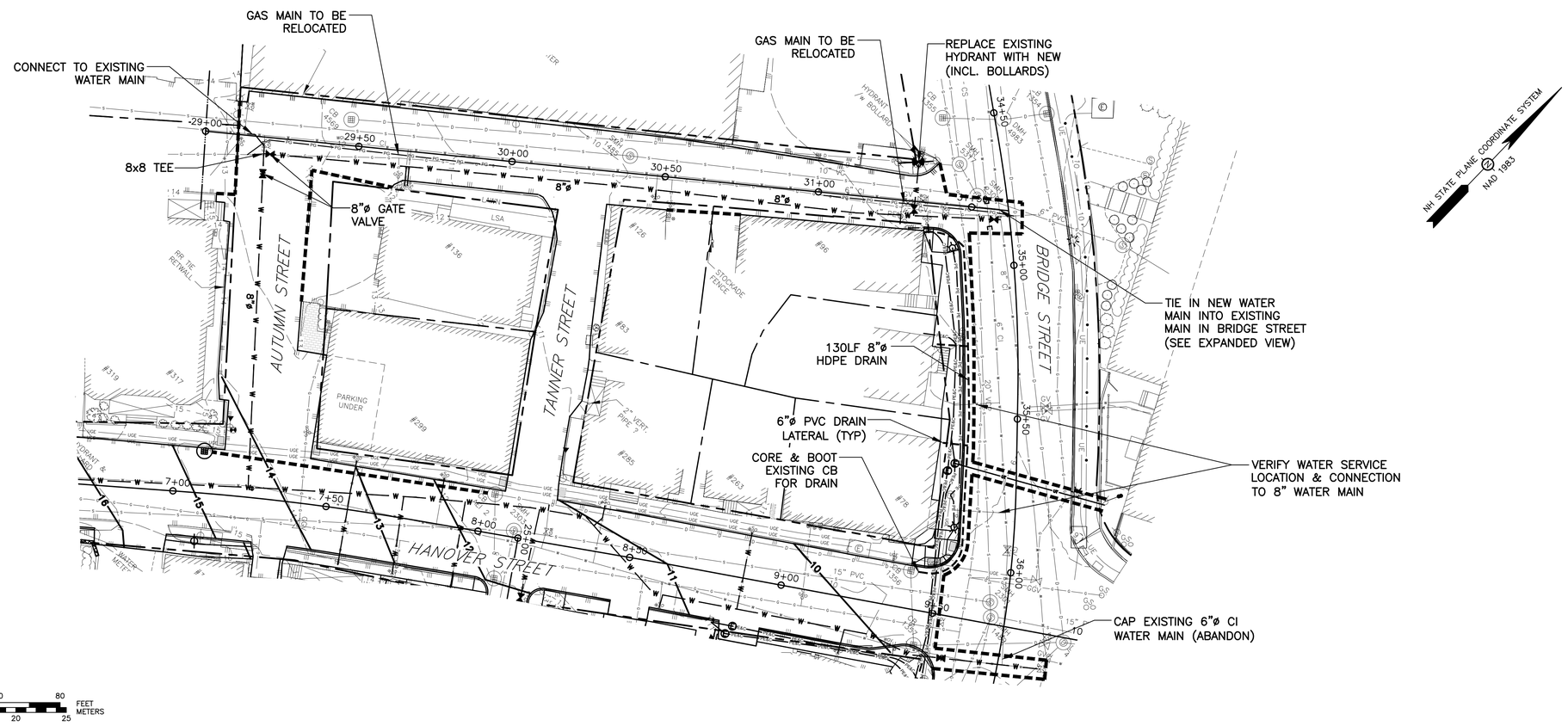

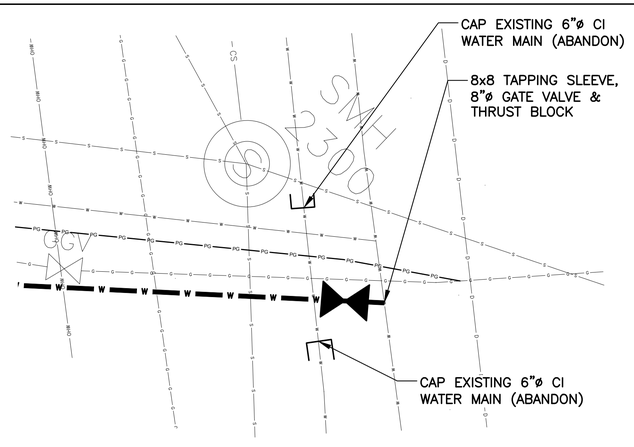

BRIDGE ST & HILL ST EXPANDED VIEW

GRAPHIC SCALE

FEET
METERS

NO.	DESCRIPTION	APP'D	DATE
0	ISSUED FOR BID	MRB	07/23/18

REVISIONS

STATE OF NEW HAMPSHIRE - MARC R. BATCHELDER - No. 12526 - PROFESSIONAL ENGINEER

DATE: MARCH 2, 2018
SCALE: 1:20
PROJECT NO.: CoP-010

MARC R. BATCHELDER, PE
ENGINEER OF RECORD

FOR: McDonough Street Phase 4 Utility & Roadway Improvements Portsmouth, NH

Seaport Engineering, LLC
PORTSMOUTH, NH
(603) 498-8449
www.seaporteng.com

TITLE: UTILITY & GRADING PLAN HILL STREET, AUTUMN STREET & BRIDGE STREET

C-304

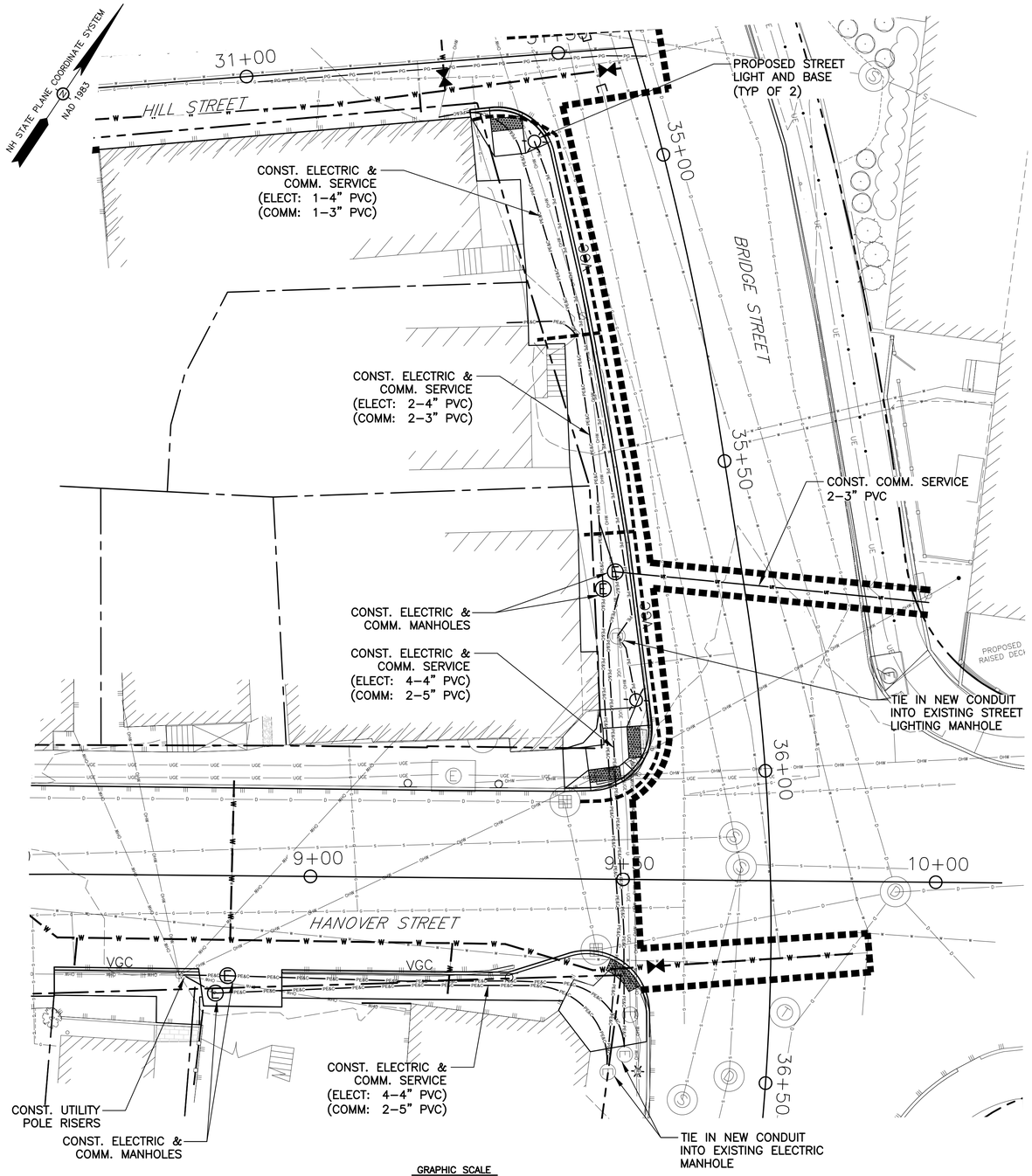

HANOVER STREET & BRIDGE STREET

GRAPHIC SCALE

10 5 0 10 20 30 40 FEET

3 0 5 10 METERS

ELECTRICAL NOTES:

1. ALL ELECTRICAL INSTALLATION SHALL BE COMPLETED BY A NH STATE LICENSED ELECTRICIAN.
2. ALL ELECTRICAL WORK SHALL BE DONE IN ACCORDANCE WITH N.E.C. AND CITY OF PORTSMOUTH ORDINANCES.
3. AN ELECTRICAL PERMIT IS REQUIRED FOR ALL CONDUIT AND ELECTRICAL WORK.
4. CONTRACTOR SHALL COORDINATE ELECTRICAL AND COMMUNICATION CONDUIT INSTALLATION, INCLUDING CONNECTION TO EXISTING MANHOLES/PULLBOX AND RISERS ON UTILITY POLES WITH PRIVATE UTILITY COMPANIES.
5. CONTRACTOR SHALL PROVIDE SWEEPS AND RISERS AT UTILITY POLES AND AT BUILDINGS FOR FINAL CONNECTIONS. PROVIDE WEATHERTIGHT CAPS.

NO.	DESCRIPTION	APP'D	DATE
0	ISSUED FOR BID	MRB	07/23/18

REVISIONS

STATE OF NEW HAMPSHIRE – MARC R. BATCHELDER No. 12626 – PROFESSIONAL ENGINEER

DATE: MARCH 2, 2018
SCALE: 1:10
PROJECT NO.: CoP-010

MARC R. BATCHELDER, PE
ENGINEER OF RECORD

FOR: McDonough Street Phase 4 Utility & Roadway Improvements Portsmouth, NH

Seaport Engineering, LLC
PORTSMOUTH, NH
(603) 498-8449
www.seaporteng.com

TITLE: ELECTRICAL PLAN

C-401

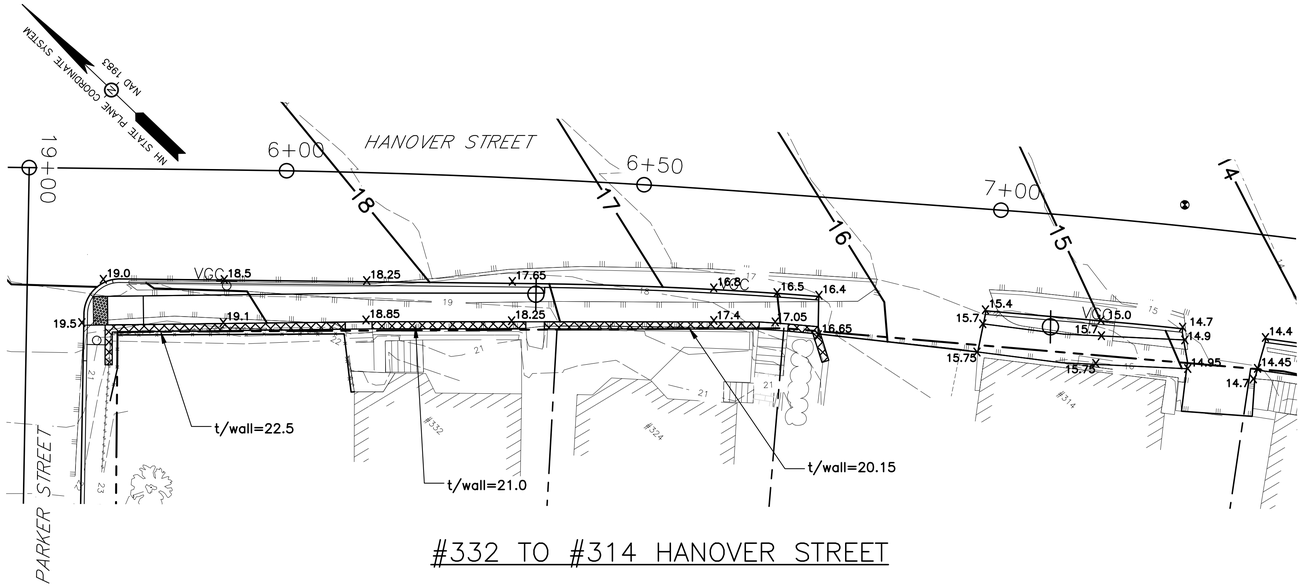

#332 TO #314 HANOVER STREET

NOTES:

1. CONTRACTOR TO COORDINATE WITH PROPERTY OWNERS REMOVAL AND REPLACEMENT OF RETAINING WALLS.
2. CONTRACTOR SHALL VERIFY ELEVATIONS OF STEPS AND DETERMINE IF ADDITIONAL STEPS ARE REQUIRED TO MEET PROPOSED SIDEWALK GRADES. IF ADDITIONAL STEPS ARE NEEDED, MATCH TYPE (CONCRETE OR GRANITE) AND WIDTH OF EXISTING.
3. LANDSCAPED AREAS SHALL BE SAVED TO THE EXTENT POSSIBLE. CONTRACTOR SHALL RE-ESTABLISH (PLANTINGS, LOAM, MULCH, ETC.) LANDSCAPED AREAS DISTURBED.

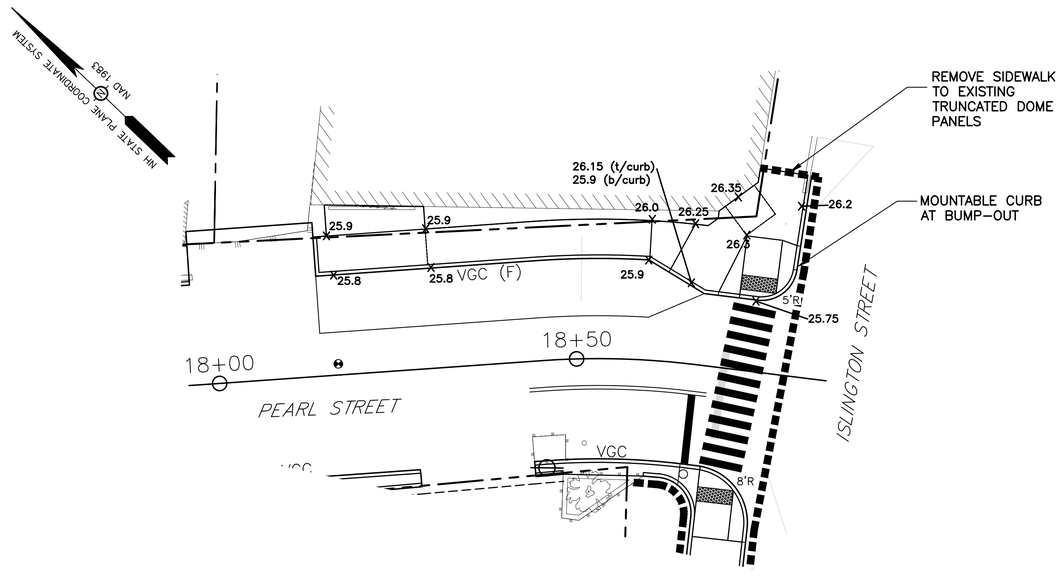

PEARL STREET & ISLINGTON STREET

GRAPHIC SCALE

FEET / METERS

NO.	DESCRIPTION	APP'D	DATE
0	ISSUED FOR BID	MRB	07/23/18

REVISIONS

STATE OF NEW HAMPSHIRE - MARC R. BATCHELDER - No. 12526 - LICENSED PROFESSIONAL ENGINEER

DATE: MARCH 2, 2018
SCALE: 1:10
PROJECT NO.: CoP-010

MARC R. BATCHELDER, PE
ENGINEER OF RECORD

FOR: McDonough Street Phase 4 Utility & Roadway Improvements Portsmouth, NH

Seaport Engineering, LLC
PORTSMOUTH, NH
(603) 498-8449
www.seaporteng.com

TITLE: DETAILED GRADING PLANS

C-501

PROJECT NAME AND LOCATION:

MCDONOUGH (PHASE 4) – ROADWAY IMPROVEMENTS
PORTSMOUTH, NEW HAMPSHIRE

DESCRIPTION:

THE PROJECT CONSISTS OF INSTALLATION OF NEW WATER MAIN FROM BREWSTER STREET TO BRIDGE STREET AND CORRESPONDING SIDE STREETS. REPLACEMENT OF DRAINAGE SYSTEM AND PORTIONS OF SEWER SYSTEM. RECLAIM THE EXISTING ASPHALT PAVEMENT SURFACE, RE–GRADE THE BASE MATERIALS AND RESURFACE ROADWAY. INCLUDES RECONSTRUCTION OF EXISTING CURBING AND SIDEWALKS.

CONSTRUCTION SEQUENCE:

1. INSTALL ALL EROSION CONTROL MEASURES.
2. INSTALLATION OF SEWER, WATER AND DRAINAGE SYSTEMS.
3. RECLAIM EXISTING ASPHALT PAVEMENT.
4. GRADE AND COMPACT BASE MATERIALS.
5. PLACE BASE COURSE OF ROADWAY PAVEMENT.
6. RESET CURBING AND CONSTRUCT NEW SIDEWALKS.
7. FINISH GRADE BEHIND SIDEWALKS.
8. PLACE SEED AND MULCH ON LOAMED AREAS.
9. PLACE WEARING COURSE OF PAVEMENT.
10. INSTALL ALL ROADWAY STRIPING AND SIGNS.
11. WHEN CONSTRUCTION ACTIVITY IS COMPLETE AND SITE IS STABILIZED, REMOVE EROSION CONTROL MEASURES.

EROSION AND SEDIMENT CONTROLS AND STABILIZATION PRACTICES:

THE EROSION CONTROL PROCEDURES SHALL CONFORM TO SECTION 645 OF THE "STANDARD SPECIFICATION FOR ROAD AND BRIDGE CONSTRUCTION" OF THE NHDOT, AND "STORM WATER MANAGEMENT AND EROSION AND SEDIMENT CONTROL HANDBOOK FOR URBAN AND DEVELOPING AREAS IN NEW HAMPSHIRE".

DURING CONSTRUCTION AND THEREAFTER, EROSION CONTROL MEASURES ARE TO BE IMPLEMENTED AS NOTED. THE SMALLEST PRACTICAL AREA OF LAND SHOULD BE EXPOSED AT ANY ONE TIME DURING CONSTRUCTION, BUT IN NO CASE SHALL EXCEED 5 ACRES AT ANY ONE TIME BEFORE DISTURBED AREAS ARE STABILIZED.

AN AREA SHALL BE CONSIDERED STABLE IF ONE OF THE FOLLOWING HAS OCCURRED:

- BASE COURSE GRAVELS HAVE BEEN INSTALLED IN AREAS TO BE PAVED;
- A MINIMUM OF 85% VEGETATED GROWTH HAS BEEN ESTABLISHED;
- A MINIMUM OF 3" OF NON–EROSIVE MATERIAL SUCH AS STONE OR RIPRAP HAS BEEN INSTALLED; OR
- EROSION CONTROL BLANKETS HAVE BEEN PROPERLY INSTALLED.

ANY DISTURBED AREAS WHICH ARE TO BE LEFT TEMPORARILY, AND WHICH WILL BE REGRADED LATER DURING CONSTRUCTION SHALL BE MACHINE HAY MULCHED AND SEEDED WITH RYE GRASS TO PREVENT EROSION.

DUST CONTROL: IF TEMPORARY STABILIZATION PRACTICES, SUCH AS TEMPORARY VEGETATION AND MULCHING, DO NOT ADEQUATELY REDUCE DUST GENERATION, APPLICATION OF WATER OR CALCIUM CHLORIDE SHALL BE APPLIED IN ACCORDANCE WITH BEST MANAGEMENT PRACTICES.

ALL EROSION CONTROLS SHALL BE INSPECTED WEEKLY DURING THE LIFE OF THE PROJECT AND AFTER EACH STORM OF 0.5" OR GREATER. ALL DAMAGED SILT FENCES SHALL BE REPAIRED. SEDIMENT DEPOSITS SHALL PERIODICALLY BE REMOVED AND DISPOSED IN A SECURED LOCATION.

AVOID THE USE OF FUTURE OPEN SPACES (LOAM AND SEED AREAS) WHEREVER POSSIBLE DURING CONSTRUCTION. CONSTRUCTION TRAFFIC SHALL USE THE ROADBEDS OF FUTURE ACCESS DRIVES AND PARKING AREAS.

TOPSOIL REQUIRED FOR THE ESTABLISHMENT OF VEGETATION SHALL BE STOCKPILED IN AMOUNTS NECESSARY TO COMPLETE FINISHED GRADING OF ALL EXPOSED AREAS. CONSTRUCT SILT FENCE AROUND TOPSOIL STOCKPILE.

ALL FILLS SHALL BE PLACED AND COMPACTED TO REDUCE EROSION, SLIPPAGE, SETTLEMENT, SUBSIDENCE OR OTHER RELATED PROBLEMS.

DISTURBED AREAS SHALL BE SEEDED WITHIN 72 HOURS FOLLOWING FINISHED GRADING.

AT NO TIME SHALL ANY DISTURBED AREA REMAIN UNSTABILIZED FOR LONGER THAN 72 HOURS. ALL AREAS WHERE CONSTRUCTION IS NOT COMPLETE WITHIN THIRTY DAYS OF THE INITIAL DISTURBANCE SHALL BE MACHINE HAY MULCHED AND SEEDED WITH RYE GRASS TO PREVENT EROSION.

INSTALLATION PROCEDURES OF EROSION AND SEDIMENT CONTROLS:

A. VEGETATIVE PRACTICE

FOR PERMANENT MEASURES AND PLANTINGS FROM EARLY SPRING TO SEPTEMBER 30:

LIMESTONE SHALL BE THOROUGHLY INCORPORATED INTO THE LOAM LAYER AT A RATE OF 2 TONS PER ACRE.

FERTILIZER SHALL BE SPREAD ON THE TOP LAYER OF LOAM AND WORKED INTO THE SURFACE. FERTILIZER APPLICATION RATE SHALL BE 500 POUNDS PER ACRE OF 10–20–20 FERTILIZER.

SEED SHALL BE SOWN AT THE RATES SHOWN IN THE TABLE BELOW. IMMEDIATELY BEFORE SEEDING, THE SOIL SHALL BE LIGHTLY RAKED. ONE HALF THE SEED SHALL BE SOWN IN ONE DIRECTION AND THE OTHER HALF AT RIGHT ANGLES TO THE ORIGINAL DIRECTION. IT SHALL BE LIGHTLY RAKED INTO THE SOIL TO A DEPTH NOT OVER 1/4 INCH AND ROLLED WITH A HAND ROLLER WEIGHING NOT OVER 100 POUNDS PER LINEAR FOOT OF WIDTH. HAY MULCH SHALL BE APPLIED IMMEDIATELY AFTER SEEDING AT A RATE OF 1.5 TO 2 TONS PER ACRE, AND SHALL BE HELD IN PLACE USING APPROPRIATE TECHNIQUES FROM THE EROSION AND SEDIMENT CONTROL HANDBOOK.

THE SURFACE SHALL BE WATERED AND KEPT MOIST WITH A FINE SPRAY AS REQUIRED, WITHOUT WASHING AWAY THE SOIL, UNTIL THE GRASS IS WELL ESTABLISHED. ANY AREAS WHICH ARE NOT SATISFACTORILY COVERED SHALL BE RESEEDED, AND ALL NOXIOUS WEEDS REMOVED.

A GRASS SEED MIXTURE CONTAINING THE FOLLOWING SEED REQUIREMENTS SHALL BE:

GENERAL COVER	SEEDING RATE
CREEPING RED FESCUE	100 LBS/ACRE
KENTUCKY BLUEGRASS	100 LBS/ACRE

SLOPE SEED (ALL SLOPES GREATER THAN OR EQUAL TO 3:1)

CREEPING RED FESCUE	20 LBS/ACRE
TALL FESCUE	20 LBS/ACRE
BIRDSFOOT TREFOIL	2 LBS/ACRE

IN NO CASE SHALL THE WEED CONTENT EXCEED ONE PERCENT BY WEIGHT. ALL SEED SHALL COMPLY WITH APPLICABLE STATE AND FEDERAL SEED LAWS.

FOR TEMPORARY PROTECTION OF DISTURBED AREAS:
MULCHING AND SEEDING SHALL BE APPLIED AT THE FOLLOWING RATES:

PERENNIAL RYE: 0.7 LBS/1,000 S.F.
MULCH: 1.5 TONS/ACRE

B. MULCHING

IN ORDER TO BE EFFECTIVE, MULCHING MUST BE IN PLACE PRIOR TO MAJOR STORM EVENTS. THERE ARE TWO TYPES OF STANDARDS:

APPLY MULCH PRIOR TO ANY STORM EVENT:
THIS IS APPLICABLE WHEN WORKING WITHIN 100 FEET OF WETLANDS. IT WILL BE NECESSARY TO CLOSELY MONITOR WEATHER FORECASTS FOR ADEQUATE WARNING TO SIGNIFICANT STORMS.

REQUIRED MULCHING WITHIN SPECIFIED TIME PERIOD:
THE TIME PERIOD CAN RANGE FROM 14 TO 21 DAYS OF INACTIVITY IN AN AREA, THE LENGTH OF TIME VARYING WITH SITE CONDITIONS. JUDGEMENT SHALL BE USED TO EVALUATE THE INTERACTION OF SITE CONDITIONS AND THE POTENTIAL FOR IMPACT ON ADJACENT AREAS TO CHOOSE AN APPROPRIATE TIME RESTRICTION.

WHEN MULCH IS TO BE APPLIED TO PROVIDE PROTECTION OVER WINTER MONTHS, IT SHALL BE AT A RATE OF 6,000 POUNDS OF HAY OR STRAW PER ACRE. A TACKIFIER SHALL BE ADDED TO THE MULCH.

C. WINTER NOTES

ALL PROPOSED VEGETATED AREAS WHICH DO NOT EXHIBIT A MINIMUM OF 85% VEGETATIVE GROWTH BY OCTOBER 15TH, OR WHICH ARE DISTURBED AFTER OCTOBER 15TH, SHALL BE STABILIZED BY SEEDING AND INSTALLING EROSION CONTROL BLANKETS ON SLOPES GREATER THAN 3:1, AND SEEDING AND PLACING 3 TO 4 TONS OF MULCH PER ACRE, SECURED WITH ANCHORED NETTING, ELSEWHERE. THE INSTALLATION OF EROSION CONTROL BLANKETS OR MULCH AND NETTING SHALL NOT OCCUR OVER ACCUMULATED SNOW OR ON FROZEN GROUND AND SHALL BE COMPLETED IN ADVANCE OF THAW OR SPRING MELT EVENTS.

ALL DITCHES OR SWALES WHICH DO NOT EXHIBIT A MINIMUM OF 85% VEGETATIVE GROWTH BY OCTOBER 15TH, OR WHICH ARE DISTURBED AFTER OCTOBER 15TH, SHALL BE STABILIZED TEMPORARILY WITH STONE OR EROSION CONTROL BLANKETS APPROPRIATE FOR THE DESIGN FLOW CONDITIONS.

AFTER NOVEMBER 15TH, INCOMPLETE ROAD OR PARKING SURFACES, WHERE WORK HAS STOPPED FOR THE WINTER SEASON, SHALL BE PROTECTED WITH A MINIMUM OF 3 INCHES OF CRUSHED GRAVEL PER NHDOT ITEM 304.3.

MAINTENANCE AND PROTECTION:

1. THE CONTRACTOR SHALL MAINTAIN ALL LOAM & SEED AREAS UNTIL FINAL ACCEPTANCE AT THE COMPLETION OF THE CONTRACT. MAINTENANCE SHALL INCLUDE WATERING, WEEDING, REMOVAL OF STONES AND OTHER FOREIGN OBJECTS OVER 1/2 INCHES IN DIAMETER WHICH MAY APPEAR AND THE FIRST TWO (2) CUTTINGS OF GRASS NO CLOSER THEN TEN (10) DAYS APART. THE FIRST CUTTING SHALL BE ACCOMPLISHED WHEN THE GRASS IS FROM 2 1/2 TO 3 INCHES HIGH. ALL BARE AND DEAD SPOTS WHICH BECOME APPARENT SHALL BE PROPERLY PREPARED, LIMED AND FERTILIZED, AND RESEEDED BY THE CONTRACTOR AT HIS EXPENSE AS MANY TIMES AS NECESSARY TO SECURE GOOD GROWTH. THE ENTIRE AREA SHALL BE MAINTAINED, WATERED AND CUT UNTIL ACCEPTANCE OF THE LAWN BY THE OWNER'S REPRESENTATIVE.
2. THE CONTRACTOR SHALL TAKE WHATEVER MEASURES ARE NECESSARY TO PROTECT THE GRASS WHILE IT IS DEVELOPING.
3. TO BE ACCEPTABLE, SEEDED AREAS SHALL CONSIST OF A UNIFORM STAND OF AT LEAST 90 PERCENT ESTABLISHED PERMANENT GRASS SPECIES, WITH UNIFORM COUNT OF AT LEAST 100 PLANTS PER SQUARE FOOT.
4. SEEDED AREAS WILL BE FERTILIZED AND RESEEDED AS NECESSARY TO INSURE VEGETATIVE ESTABLISHMENT.
5. THE SWALES WILL BE CHECKED WEEKLY AND REPAIRED WHEN NECESSARY UNTIL ADEQUATE VEGETATION IS ESTABLISHED.
6. THE SILT FENCE BARRIER SHALL BE CHECKED AFTER EACH RAINFALL AND AT LEAST DAILY DURING PROLONGED RAINFALL.
7. SILT FENCING SHALL BE REMOVED ONCE VEGETATION IS ESTABLISHED, AND DISTURBED AREAS RESULTING FROM SILT FENCE REMOVAL SHALL BE PERMANENTLY SEEDED.

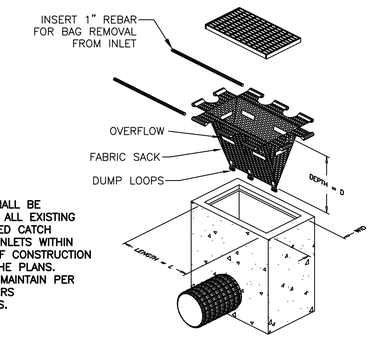

NOTES:
1. SILT SACK SHALL BE INSTALLED AT ALL EXISTING AND PROPOSED CATCH BASINS AND INLETS WITHIN THE LIMITS OF CONSTRUCTION SHOWN ON THE PLANS.
2. INSTALL AND MAINTAIN PER MANUFACTURERS REQUIREMENTS.

DRAINAGE INLET PROTECTION
SCALE: N.T.S

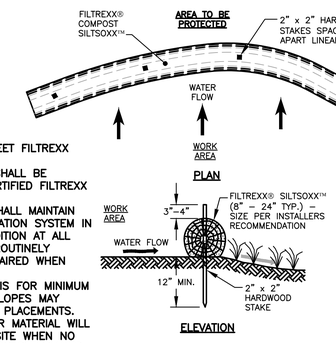

NOTES:
1. ALL MATERIAL TO MEET FILTREXX SPECIFICATIONS.
2. FILLTREXX SYSTEM SHALL BE INSTALLED BY A CERTIFIED FILTREXX INSTALLER.
3. THE CONTRACTOR SHALL MAINTAIN THE COMPOST FILTRATION SYSTEM IN A FUNCTIONAL CONDITION AT ALL TIMES. IT WILL BE ROUTINELY INSPECTED AND REPAIRED WHEN REQUIRED.
4. SILTSOXX DEPICTED IS FOR MINIMUM SLOPES, GREATER SLOPES MAY REQUIRE ADDITIONAL PLACEMENTS.
5. THE COMPOST FILTER MATERIAL WILL BE DISPERSED ON SITE WHEN NO LONGER REQUIRED, AS DETERMINED BY THE ENGINEER.

SEDIMENTATION LOG
SCALE: N.T.S

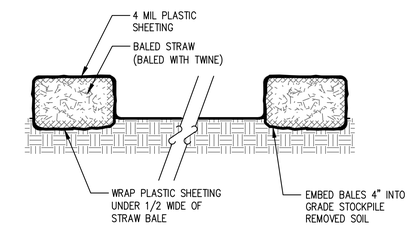

NOTES:
1. CONTRACTOR MUST PROVIDE A CONCRETE CLEAN–OUT STATION. NO TRUCK CLEAN–OUT WILL BE ALLOWED WITHOUT CONTAINMENT.
2. PLASTIC WRAP SHALL BE FREE OF TEARS OR HOLES.
3. AFTER BASIN IS USED, WAHWATER FROM WASHOUT BASINN SHALL BE ALLOWED TO EVAPORATE OR BE VACUUMED OUT.
4. REMOVE REMAINING HARDENED SOLIDS.
5. REPLACE PLASTIC SHEETING AND TRAWBALES AS REQUIRED.

CONCRETE CLEAN–OUT
SCALE: N.T.S

NO.	DESCRIPTION	APP'D	DATE
0	ISSUED FOR BID	MRB	07/23/18

REVISIONS

STATE OF NEW HAMPSHIRE – MARC R. BATCHELDER No. 12526 – PROFESSIONAL ENGINEER

DATE: MARCH 2, 2018
SCALE: 1:20
PROJECT NO.: CoP-010
MARC R. BATCHELDER, PE
ENGINEER OF RECORD

FOR: McDonough Street Phase 4 Utility & Roadway Improvements Portsmouth, NH

Seaport Engineering, LLC
PORTSMOUTH, NH
(603) 498-8449
www.seaporteng.com

TITLE: DETAILS EROSION CONTROL

C-601

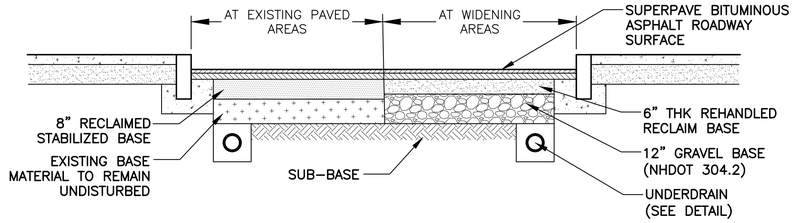

NOTES:
1. STREET SHALL BE RECLAIMED TO A DEPTH OF 12". TOP 4" OF RECLAIM MATERIAL SHALL BE USED AS BASE MATERIALS FOR WIDENING AREAS, DRIVEWAYS AND SIDEWALK (REHANDLE).
2. RECLAIMED STABILIZED BASE SHALL COMPLY WITH NHDOT ITEM 306.
3. RECLAIM MATERIAL TO BE TESTED TO DETERMINE IF ADDITIONAL 1.5" STONE WILL BE ADDED. IN THE EVENT ADDITIONAL CRUSHED STONE IS REQUIRED, CONTRACTOR SHALL SPREAD STONE TO THE REQUIRED THICKNESS AND RECLAIM MATERIAL A SECOND TIME TO MIX ADDED STONE.
4. AT WIDENED AREAS, CRUSHED GRAVEL (NHDOT 304.3) SHALL BE USED IF REHANDLED RECLAIM QUANTITY IS NOT AVAILABLE.

PAVEMENT THICKNESS:
1.25" WEARING (3/8" 75 GYRATION)
3.0" BINDER (3/4" 50 GYRATION)

TYPICAL ROADWAY SECTION
SCALE: N.T.S

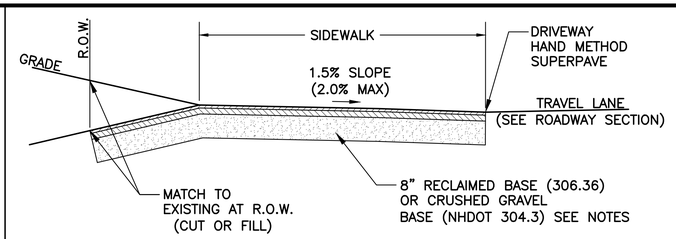

SECTION VIEW

NOTES:
1. DRIVEWAY PAVEMENT SHALL BE:
   1.5" WEARING (3/8" 50 GYRATION)
   2.0" BINDER (1/2" 50 GYRATION)
2. ENGINEER TO DETERMINE IF EXISTING BASE MATERIALS ARE ACCEPTABLE.
3. RECLAIMED BASE MATERIAL SHALL BE USED UNLESS DIRECTED BY THE ENGINEER, OR IF QUANTITIES HAVE BEEN DEPLETED.

TYPICAL DRIVEWAY SECTION
SCALE: N.T.S

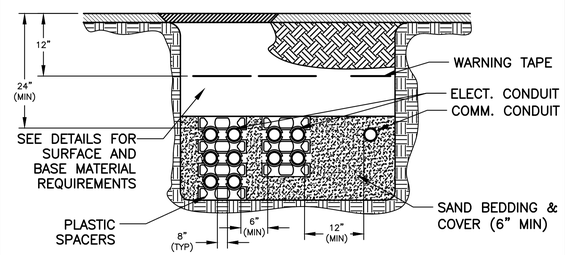

NOTES:
1. VERIFY QTY, MATERIAL & SIZE OF CONDUITS w/ UTILITY CO.
2. DIMENSIONS SHOWN ARE CITY MINIMUM REQUIREMENTS, ACTUAL DIMENSIONAL REQUIREMENTS MAY BE GREATER BASED ON UTILITY CO. STANDARDS.
3. NO CONDUIT RUN SHALL EXCEED 360° IN BENDS.
4. ALL CONDUIT SHALL BE U.L. LISTED SCH 40 EXCEPT UNDER ROADS, WHERE SCH 80 IS REQUIRED.
5. A 200# PULL ROPE SHALL BE BLOWN IN TO EACH CONDUIT AFTER ASSEMBLY.
6. CONTRACTOR TO COORDINATE INSPECTIONS WITH UTILITY COMPANY PRIOR TO BACKFILL.
7. ALL CONDUIT SHALL CONFORM TO CURRENT EDITION OF THE NATIONAL ELECTRIC SAFETY CODE, AND ALL STATE AND LOCAL CODES.
8. ALL 90° SWEEPS SHALL BE MADE USING RIGID GALVANIZED STEEL. SWEEPS WITH A 36" TO 48" RADIUS.

ELECT. & COMM. CONDUIT TRENCH
SCALE: N.T.S

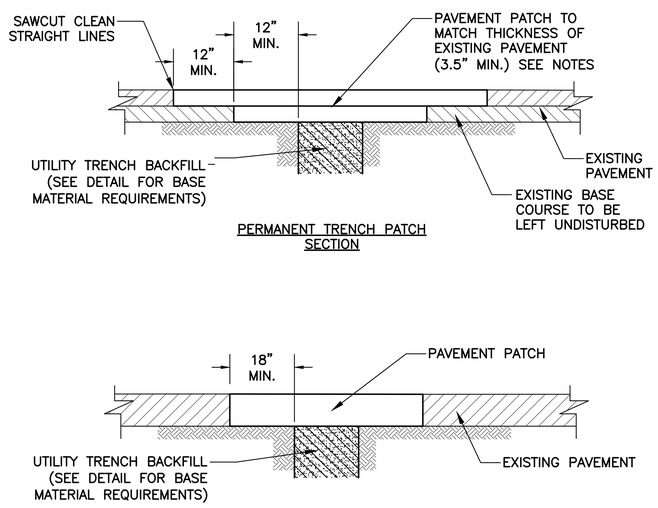

NOTES:
1. TEMPORARY ASPHALT PLACED FOR UTILITY TRENCHES ARE SUBSIDIARY TO THE PIPE INSTALLATION PAY ITEM.
2. TEMPORARY PAVEMENT PATCH SHALL BE 3/4" BINDER (2" THK MIN.). PERMANENT PAVEMENT PATCH SHALL MATCH EXISTING THICKNESS, OR 3.5", WHICH EVER IS GREATER.
3. TEMPORARY PAVEMENT PATCHES SHALL BE MAINTAINED REGULARLY. CONTRACTOR SHALL REPLACE TEMPORARY PAVEMENT PATCHES AT THE DISCRETION OF THE ENGINEER.
4. TRENCHES MAY REMAIN GRAVEL DURING THE WORK WEEK. NO TRENCHES SHALL REMAIN GRAVEL OVER THE WEEKEND, TEMPORARY PAVEMENT IS REQUIRED.

UTILITY TRENCH PATCH
SCALE: N.T.S

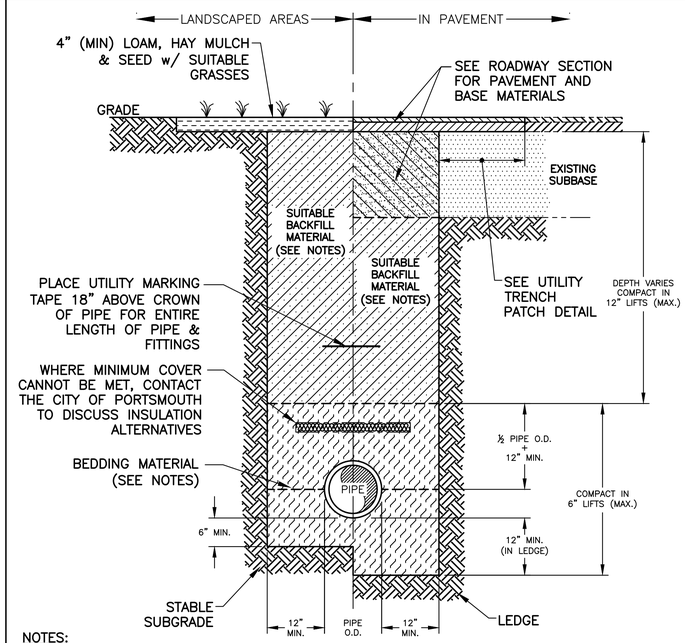

NOTES:
1. DRAIN PIPE SHALL HAVE CRUSHED STONE (NHDOT 304.4) BEDDING FOR FULL WIDTH OF TRENCH UP TO 12" ABOVE TOP OF PIPE.
2. WATER PIPE SHALL HAVE SAND (NHDOT 304.1) BEDDING FOR FULL WIDTH OF TRENCH UP TO 12" ABOVE TOP OF PIPE.
2. SEWER PIPE SHALL HAVE CRUSHED STONE (NHDOT 304.4) BEDDING FOR FULL WIDTH OF TRENCH TO SPRING LINE OF PIPE. CONTRACTOR HAS OPTION TO PLACE GEOTEXTILE FABRIC OVER CRUSHED STONE AND PLACE SAND TO 12" ABOVE TOP OF PIPE OR CONTINUE WITH PLACING CRUSHED STONE TO 12" ABOVE TOP OF PIPE. SAND SHALL NOT BE DIRECTLY PLACED ON CRUSHED STONE.
3. BEDDING AND COVER MATERIAL FOR ALL PIPE IS SUBSIDIARY TO THE PIPE PAY ITEM.
4. SUITABLE MATERIAL FOR TRENCH BACKFILL SHALL BE THE NATURAL MATERIAL EXCAVATED DURING CONSTRUCTION, BUT SHALL EXCLUDE DEBRIS, PIECES OF PAVEMENT, ORGANIC MATTER, TOP SOIL, ALL WET OR SOFT MUCK, PEAT OR CLAY, ALL EXCAVATED LEDGE MATERIAL, AND ALL ROCKS OVER SIX INCHES IN LARGEST DIMENSION, OR ANY MATERIALS DEEMED TO BE UNACCEPTABLE BY THE ENGINEER.
5. DEPTH OF COVER SHALL BE:
   WATER – 5' MIN. & 7' MAX. (<5' REQ. RIGID INS.)
   SEWER – AS INDICATED ON PLANS (<6' REQ. RIGID INS.)
   DRAIN – AS INDICATED ON PLANS (<3' REQ. RIGID INS.)
6. WATER MAIN SHALL BE POLY WRAPPED AND HAVE THREE BRASS WEDGES AT ALL NON MECHANICAL CONNECTIONS.

UTILITY TRENCH
SCALE: N.T.S

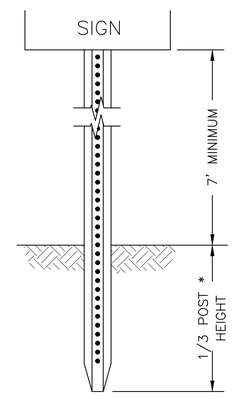

*IN LEDGE, DRILL & GROUT TO 2FT. DEPTH, MINIMUM

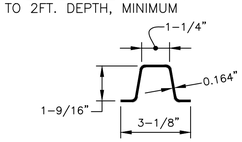

SECTION

LENGTH: AS REQUIRED

WEIGHT/LINEAR FOOT: 2.50 POUNDS (MIN.)

HOLES: 3/8" DIA., 1" C-C FULL LENGTH

STEEL: SHALL CONFORM TO ASTM A-499 (GRADE 60) OR ASTM A-5761 (GRADE 1070 – 1080)

FINISH: SHALL BE HOT DIPPED GALVANIZED.

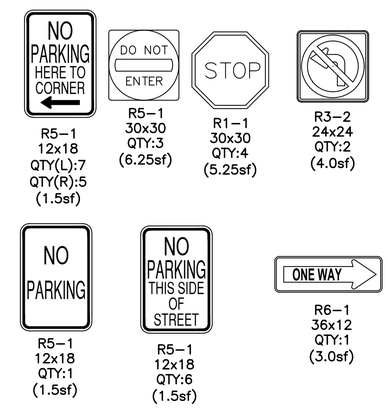

NOTES:
1. POSTS MAY BE SET OR DRIVEN.
2. WHEN POSTS ARE SET, HOLES SHALL BE DUG TO THE PROPER DEPTH; AFTER INSERTING POSTS, THE HOLES SHALL BE BACK FILLED WITH SUITABLE MATERIAL IN LAYERS NOT TO EXCEED 6" IN DEPTH AND THOROUGHLY COMPACTED, CARE BEING TAKEN TO PRESERVE THE ALIGNMENT OF THE POST.
3. WHEN POSTS ARE DRIVEN, A SUITABLE DRIVING CAP SHALL BE USED AND AFTER DRIVING THE TOP OF THE POST SHALL HAVE SUBSTANTIALLY THE SAME CROSS-SECTIONAL DIMENSION AS THE BODY OF THE POST; BATTERED HEADS WILL NOT BE ACCEPTED.
4. POSTS SHALL NOT BE DRIVEN WITH THE SIGN ATTACHED TO THE POST.
5. WHEN SIGN IS IN PLACE, NO PART OF THE POST SHALL EXTEND ABOVE THE SIGN.

SIGNS AND POST
SCALE: N.T.S

NO.	DESCRIPTION	APP'D	DATE
0	ISSUED FOR BID	MRB	07/23/18

REVISIONS

STATE OF NEW HAMPSHIRE – MARC R. BATCHELDER No. 12526 – LICENSED PROFESSIONAL ENGINEER

DATE: MARCH 2, 2018
SCALE: 1:20
PROJECT NO.: CoP-010

MARC R. BATCHELDER, PE
ENGINEER OF RECORD

FOR: McDonough Street Phase 4 Utility & Roadway Improvements Portsmouth, NH

Seaport Engineering, LLC
PORTSMOUTH, NH
(603) 498-8449
www.seaporteng.com

TITLE: DETAILS ROADWAY

C-602

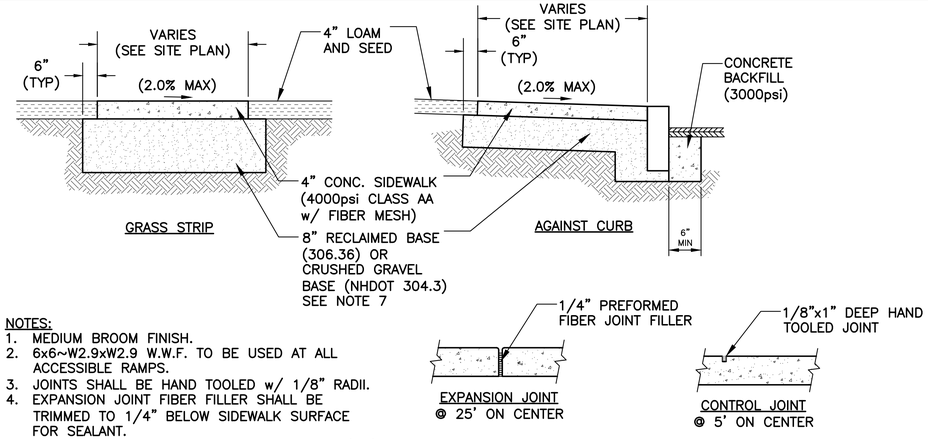

NOTES:
1. MEDIUM BROOM FINISH.
2. 6x6~W2.9xW2.9 W.W.F. TO BE USED AT ALL ACCESSIBLE RAMPS.
3. JOINTS SHALL BE HAND TOOLED w/ 1/8" RADII.
4. EXPANSION JOINT FIBER FILLER SHALL BE TRIMMED TO 1/4" BELOW SIDEWALK SURFACE FOR SEALANT.
5. THERE SHALL BE NO CHANGE IN ELEVATION (LIP) OR GAPS IN THE SIDEWALK GREATER THAN 1/4".
6. SIDEWALK CONCRETE SHALL BE TREATED WITH SILOXANE SEALER.
7. RECLAIMED BASE MATERIAL SHALL BE USED UNLESS DIRECTED BY THE ENGINEER, OR IF QUANTITIES HAVE BEEN DEPLETED.

CONCRETE SIDEWALK
SCALE: N.T.S

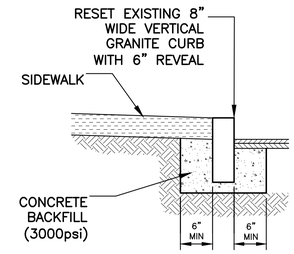

RADIUS	MAX. LENGTH
<20'	USE CURVED CURB
21'–25'	3'
26'–30'	4'
31'–35'	5'
36'–40'	6'
41'–50'	7'
51'–56'	8'
56'–60'	9'
OVER 60'	10'

NOTES:
1. CURB TO BE SET TO LINE AND GRADE SPECIFIED.
2. ALL RADII 20 FEET AND SMALLER SHALL USE CURVED SECTIONS.
3. CURB AT FLUSH SECTION OF SIDEWALK SHALL BE SET TO 1.5% (2.0% MAX.) SLOPE. CURB AT RAMPS SHALL BE SET TO 8.0% (8.3% MAX.). IT IS THE CURB CONTRACTORS RESPONSIBILITY TO VERIFY SLOPES WITH A SMART LEVEL.
4. VERTICAL GRANITE JOINTS SHALL BE MORTARED.
5. SEE CHART FOR MAX / MIN STONE LENGTHS.
6. RESET EXISTING CURB. ANY MISSING OR DAMAGED CURB SHALL BE REPLACED WITH MATCHING CURB SIZE.
7. NO CURB LESS THAN 3' IN LENGTH WILL BE ALLOWED.
8. CURB MATERIAL SHALL BE FROM THE SAME LOT OF GRANITE. VARIANCES IN COLOR AND TYPE WILL NOT BE ACCEPTED.

VERTICAL GRANITE CURB
SCALE: N.T.S

NOTES:
1. STRIPING SHALL BE THERMO PLASTIC RETROREFLECTIVE PAVEMENT MARKING PER ASTM D 4505.

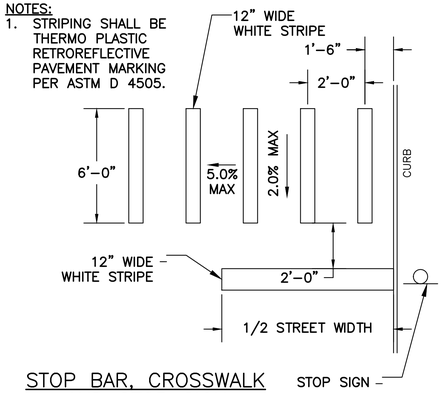

STOP BAR, CROSSWALK AND STOP SIGN
SCALE: N.T.S

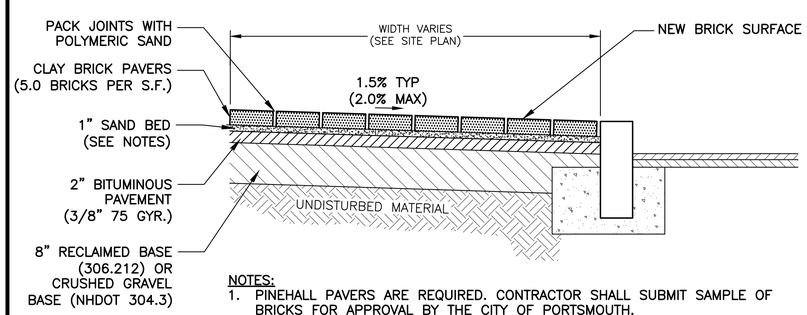

NOTES:
1. PINEHALL PAVERS ARE REQUIRED. CONTRACTOR SHALL SUBMIT SAMPLE OF BRICKS FOR APPROVAL BY THE CITY OF PORTSMOUTH.
2. IN AREAS WHERE BRICK DOES NOT ABUT CURBING, EDGING SHALL BE INSTALLED TO HOLD BRICKS IN PLACE.
3. SAND BEDDING: 3 PARTS SAND MIX AND 1 PART PORTLAND CEMENT.
4. BRICKS SHALL BE CLASS SX, TYPE 1, APPLICATION PX. BRICKS SHALL BE NO.1, WIRE CUT FOR PAVING w/COMPRESSIVE STRENGTH OF 6,000psi (MIN.). BRICKS SHALL NOT BE CORED OR HAVE FROGS AND SHALL BE STANDARD SIZE (2.25"x3.625"x7.625").
5. BASE MATERIAL SHALL BE REHANDLED RECLAIMED BASE MATERIAL. IN THE EVENT THE RECLAIMED MATERIAL IS UNSUITABLE, OR QUANTITIES HAVE BEEN DEPLETED, 304.3 CRUSHED GRAVEL BASE SHALL BE USED.

BRICK SIDEWALK
SCALE: N.T.S

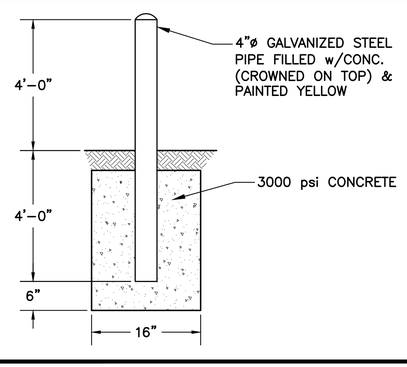

NOTES:
1. SEE SITE PLAN FOR LOCATIONS.
2. DISTURBED AREA AROUND BOLLARD SHALL BE RESTORED TO MATCH EXISTING.

BOLLARD
SCALE: N.T.S

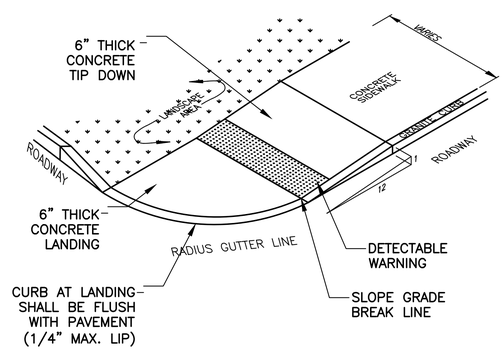

CURB RAMPS AT STREETS

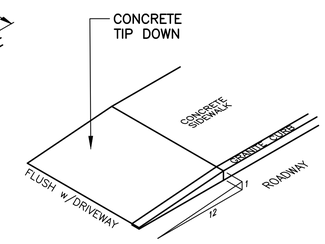

RAMPS AT DRIVEWAYS

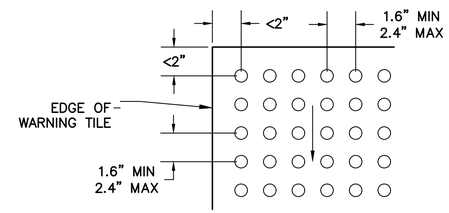

DETECTABLE WARNING TILE

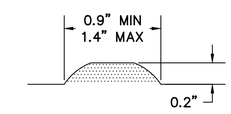

DOME SECTION

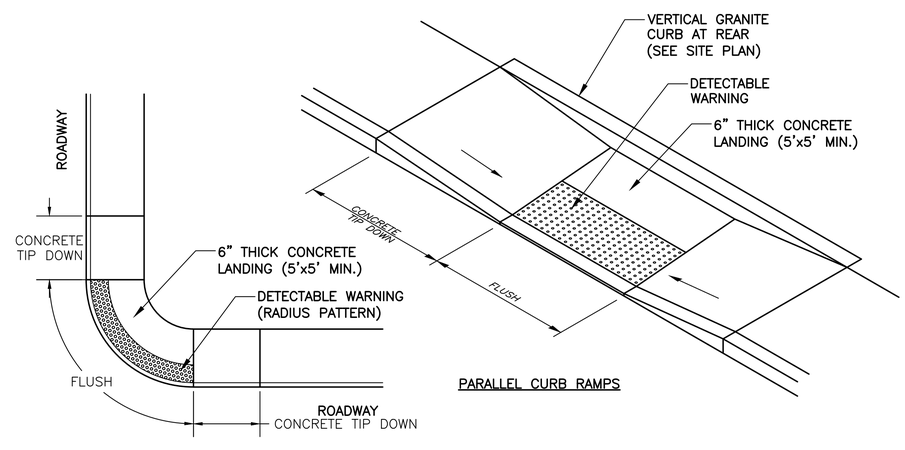

RADII CURB RAMPS

PARALLEL CURB RAMPS

CURB RAMP DETAILS
SCALE: N.T.S

NOTES:
1. ALL CURB RAMPS AND SIDEWALKS SHALL COMPLY WITH ADA (AMERICANS WITH DISABILITIES ACT).
2. TIP DOWNS SHALL HAVE A RUNNING SLOPE OF 7.5% (8.3% MAX.) AND CROSS SLOPE OF 1.5% (2.0% MAX.).
3. THERE SHALL BE NO CHANGE IN ELEVATION (LIP) OR GAPS IN THE SIDEWALK RAMPS GREATER THAN 1/4".
4. LANDINGS AND AREAS OF CHANGE IN DIRECTION SHALL HAVE A SLOPE OF 1.5% (2.0%) IN ALL DIRECTIONS.
5. DETECTABLE WARNINGS SHALL INSTALLED SO THAT PATTERN IS IN LINE WITH DIRECTION OF TRAVEL TO THE EXTENT POSSIBLE.
6. DETECTABLE WARNING TILES SHALL BE PLACED SO THAT THE EDGE CLOSEST TO THE CURB IS BETWEEN 6"–8" FROM CURB LINE.
7. DETECTABLE WARNING TILE SHALL SPAN THE FULL WIDTH OF THE RAMP AND A MINIMUM OF 24" DEEP.
8. DETECTABLE WARNING TILE SHALL BE CAST IRON, NEENAH FOUNDRY OR APPROVED EQUAL. RADIUS ADA CURB RAMPS SHALL HAVE DETECTABLE WARNING TILES IN A RADIUS PATTERN USING TUFTILE OR APPROVED EQUAL.
9. CONCRETE AT DETECTABLE WARNING RAMPS SHALL BE FIBER REINFORCED WITH A MEDIUM BROOM FINISH.
10. BASE MATERIAL FOR CONCRETE SECTIONS SHALL BE EITHER 8" THK RECLAIM BASE (306.36), OR 8" THK CRUSHED GRAVEL BASE (NHDOT 304.3).

NO.	DESCRIPTION	APP'D	DATE
0	ISSUED FOR BID	MRB	07/23/18

REVISIONS

STATE OF NEW HAMPSHIRE – MARC R. BATCHELDER – No. 12526 – PROFESSIONAL ENGINEER

DATE: MARCH 2, 2018
SCALE: 1:20
PROJECT NO.: CoP-010
MARC R. BATCHELDER, PE
ENGINEER OF RECORD

FOR: McDonough Street Phase 4 Utility & Roadway Improvements Portsmouth, NH

Seaport Engineering, LLC
PORTSMOUTH, NH
(603) 498-8449
www.seaporteng.com

TITLE: DETAILS SIDEWALK & CURB

C-603

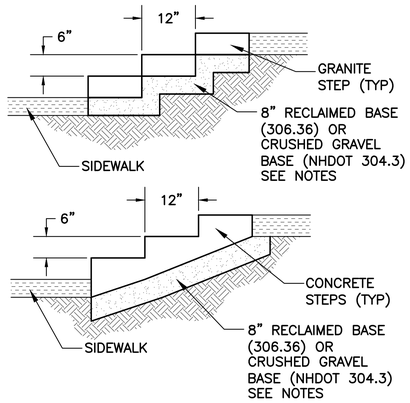

NOTES:
1. GRANITE STEPS SHALL BE EITHER RESETTING OF EXISTING OR NEW STEPS MANUFACTURED BY SWENSON GRANITE WORKS, OR APPROVED EQUAL.
2. STEPS SHALL BE INSTALLED FLUSH TO ADJACENT SIDEWALKS.
3. STEPS SHALL BE PITCHED 1.0% TOWARDS THE FRONT OF EACH STEP FOR DRAINAGE. CROSS SLOPE OF STEPS SHALL BE FLAT (1.0% MAX) OR MATCH SIDEWALK CROSS SLOPE. CONTRACTOR IS RESPONSIBILITY TO VERIFY SLOPES WITH A SMART LEVEL.
4. BASE MATERIALS SHALL BE COMPACTED TO 95% PROCTOR.
5. CONTRACTOR TO VERIFY WIDTH OF STEPS.
6. NEW GRANITE SHALL BE FROM THE SAME LOT OF GRANITE. VARIANCES IN COLOR AND TYPE WILL NOT BE ACCEPTED.
7. RECLAIMED BASE MATERIAL SHALL BE USED UNLESS DIRECTED BY THE ENGINEER, OR IF QUANTITIES HAVE BEEN DEPLETED.
8. REFER TO CONCRETE SIDEWALK DETAIL FOR CONCRETE REQUIREMENTS.

CONCRETE & GRANITE STEPS
SCALE: N.T.S

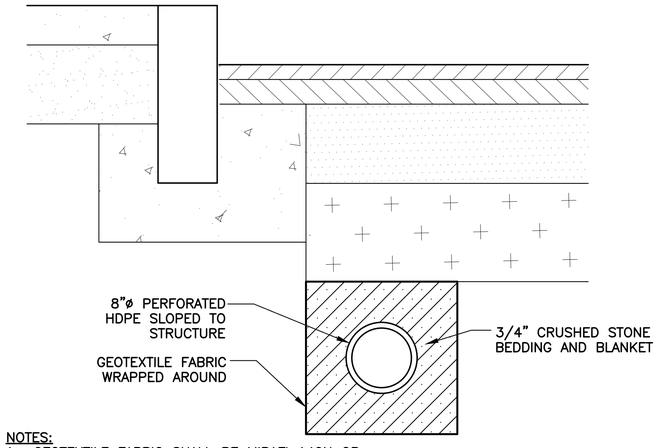

NOTES:
1. GEOTEXTILE FABRIC SHALL BE MIRAFI 140N OR APPROVED EQUAL. FABRIC SHALL BE WRAPPED COMPLETELY AROUND STONE w/ 12" (MIN) OVERLAP AT SEAMS.
2. PERFORATIONS SHALL BE ABOVE SPRINGLINE OF PIPE, SUBMIT PATTERN FOR APPROVAL.
3. CRUSHED STONE SHALL BE A MINIMUM OF 6" ON ALL SIDES OF PIPE.
5. CONTRACTOR SHALL VERIFY ALL EXISTING LATERAL INVERT ELEVATIONS TO BE CONNECTED TO DRAIN PRIOR TO INSTALLATION OF UNDERDRAIN TO VERIFY UNDERDRAIN INV.
6. UNDERDRAIN SHALL ENTER DRAINAGE STRUCTURES AT INVERTS 3.5' BELOW GRADE.

UNDERDRAIN DETAIL
SCALE: N.T.S

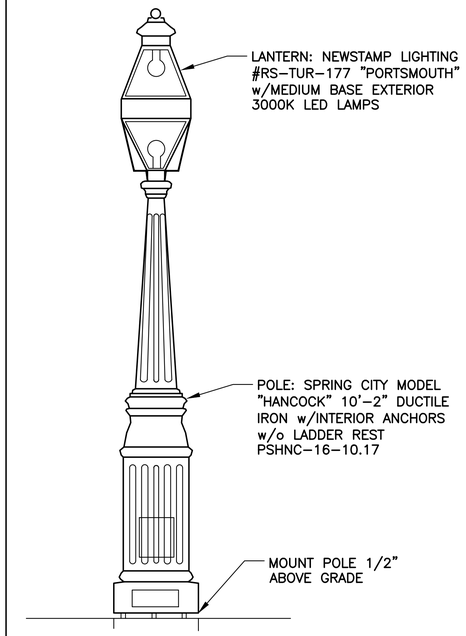

LIGHT POLE DETAIL

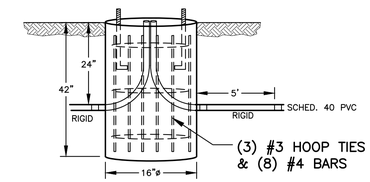

LIGHT POLE BASE DETAIL

NOTES:
1. CONCRETE FOR BASE SHALL BE 4,000psi MINIMUM AFTER 28 DAYS.
2. RIGID PIPE SHALL BE GALVANIZED.
3. BOLT AND ANCHOR REQUIREMENTS AS SPECIFIED BY POLE MANUFACTURER.
4. LIGHT POLE BASE SHALL BE SET FLUSH WITH FINISHED GRADE.

STREET LIGHT DETAILS
SCALE: N.T.S

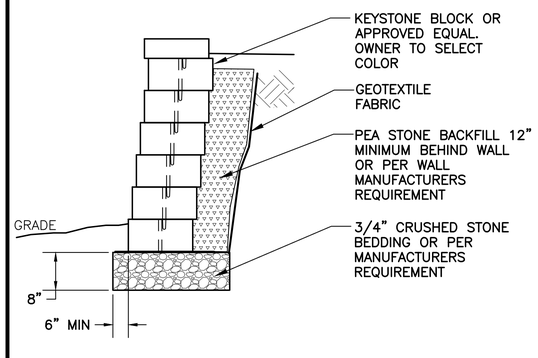

NOTES:
1. INTENT IS TO USE A MANUFACTURED PROPRIETARY WALL SYSTEM. CONTRACTOR SHALL SUPPLY A WALL DESIGN BY THE MANUFACTURER PRIOR TO CONSTRUCTION
2. GEOTEXTILE FABRIC SHALL BE MIRAFI 140N OR APPROVED EQUAL.

SEGMENTED BLOCK WALL
SCALE: N.T.S

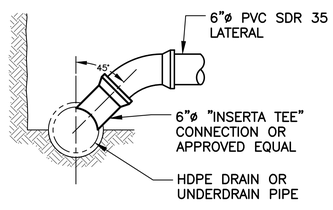

LATERAL TO PIPE CONNECTION

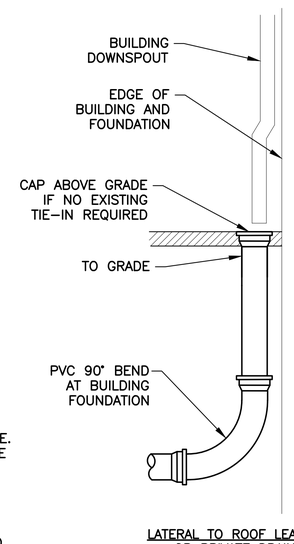

LATERAL TO ROOF LEADER OR PRIVATE DRAIN

NOTES:
1. WHERE EXISTING FOUNDATION DRAINS EXIST, CONTRACTOR SHALL CONNECT TO EXISTING. OTHERWISE LATERAL SHALL BE CAPPED AT 1' BEHIND SIDEWALK OR CURB.
2. ALL PIPE SHALL BE PVC SDR35 UNLESS OTHERWISE NOTED.
3. DRAINAGE LATERAL PAY ITEM SHALL INCLUDE "INSERTA TEE", ALL LATERAL PIPE (HORIZONTAL AND VERTICAL), AND CONNECTIONS TO DOWNSPOUTS OR CAP ABOVE GRADE FOR FUTURE.
4. EXISTING UNDERGROUND LATERALS SHALL NOT BE DIRECTLY INSTALLED TO THE MAINLINE. CONTRACTOR SHALL NOTIFY PROPERTY OWNER THAT A NEW LATERAL WILL BE PROVIDED TO A LOCATION ABOVE GRADE FOR TIE-IN BY HOMEOWNER.
5. CONTRACTOR TO CONTACT PROPERTY OWNERS TO DETERMINE FULL QUANTITY, LOCATIONS AND INVERTS OF EXISTING LATERALS.

DRAINAGE LATERAL DETAIL
SCALE: N.T.S

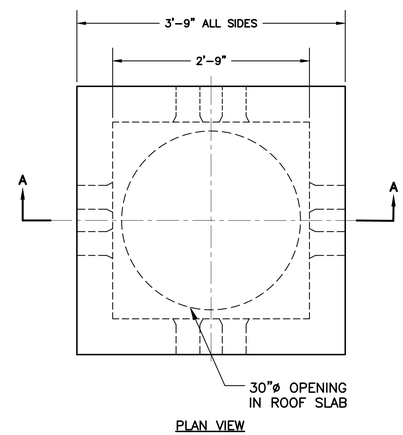

PLAN VIEW

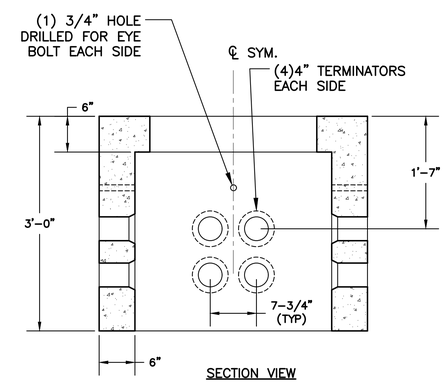

SECTION VIEW

NOTES:
1. CONCRETE: 5,000psi MINIMUM AFTER 28 DAYS.
2. STEEL REINFORCEMENT SHALL CONFORM TO ASTM A615, GRADE 60.
3. MINIMUM REINFORCEMENT STEEL COVER SHALL BE 1".
4. DESIGN LOADING: AASHTO HS20-44.
5. COVERS SHALL BE CAST w/ 'ELECTRIC' OR 'COMMUNICATION'.
6. MATCH COVERS FROM MANHOLES TYING INTO ON BRIDGE STREET OR PER UTILITY COMPANY REQUIREMENTS.

ELECT. & COMM. MANHOLE DETAIL
SCALE: N.T.S

NO.	REVISIONS	APP'D	DATE
0	ISSUED FOR BID	MRB	07/23/18

STATE OF NEW HAMPSHIRE - PROFESSIONAL ENGINEER - MARC R. BATCHELDER No. 12526 LICENSED

DATE: MARCH 2, 2018
SCALE: 1:20
PROJECT NO.: CoP-010
MARC R. BATCHELDER, PE
ENGINEER OF RECORD

FOR: McDonough Street Phase 4 Utility & Roadway Improvements Portsmouth, NH

Seaport Engineering, LLC
PORTSMOUTH, NH
(603) 498-8449
www.seaporteng.com

TITLE: DETAILS SITE & ELECTRICAL

C-604

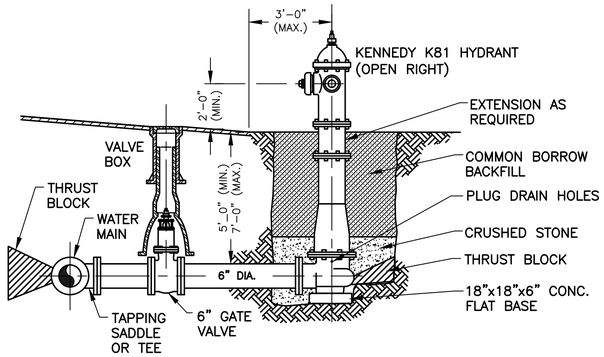

NOTES:
1. HYDRANT TO BE KENNEDY TYPE K-81, RIGHT OPEN (NO EQUAL). COORDINATE WITH CITY OF PORTSMOUTH WATER AND FIRE DEPARTMENT.
2. HYDRANT SHALL BE PAINTED IN ACCORDANCE WITH CITY OF PORTSMOUTH STANDARDS.
3. AREA AROUND HYDRANT SHALL BE GRADED TO ALLOW SURFACE WATER TO DRAIN AWAY.
4. CONTRACTOR SHALL INSTALL AN INDICATOR ATTACHED TO THE HYDRANT IN ACCORDANCE TO CITY OF PORTSMOUTH STANDARDS.
5. HYDRANT LATERAL SHALL BE POLY WRAPPED FROM MAIN TO HYDRANT AT GROUND LEVEL, 6" (MIN.) OF SAND FOR BEDDING AND COVER, WARNING TAPE 18" ABOVE PIPE.
6. TWO BOLLARDS REQUIRED AT EACH HYDRANT LOCATION (SEE DETAIL). BOLLARDS TO BE CONSIDERED INCIDENTAL TO THE HYDRANT PAY ITEM.

FIRE HYDRANT
SCALE: N.T.S

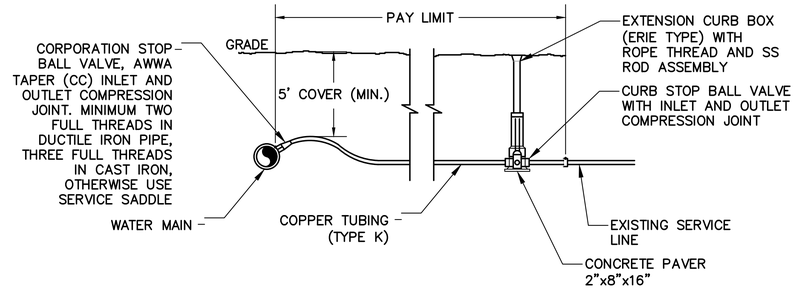

NOTES:
1. SERVICE SIZE SHALL BE EQUAL TO EXISTING, OR 1"ø MINIMUM, WHICHEVER IS LARGER.
2. PROVIDE NEW LINE USING CONTINUOUS LENGTHS OF COPPER. NO COUPLING ALLOWED IN ROADWAY WITHOUT APPROVAL OF ENGINEER.
3. TAPS TO BE MADE AT APPROX. 2:00 AND 10:00.
4. PROVIDE FOR SERVICE LINE CONTRACTION AND EXPANSION BY INSTALLING "S" IN SERVICE LINE NEAR MAIN.
5. IF SERVICE IS INSTALLED WITH LESS THAN 5' COVER, INSULATE OVER LINE.
6. REMOVE EXISTING CURB STOP AND REPLACE.
7. CONNECT CURB STOP TO EXISTING SERVICE LINE AT PROPERTY LINE OR AT LOCATION APPROVED BY THE ENGINEER (NO COUPLING WITHOUT APPROVAL OF ENGINEER) AFTER PRESSURE TESTING AND DISINFECTION.
8. CURB BOX SHALL BE SET IN THE SIDEWALK NEAR THE HOUSE SIDE UNLESS DIRECTED OTHERWISE.
9. 2" SERVICE CONNECTIONS SHALL USE A STAINLESS STEEL SERVICE SADDLE.
10. CONTRACTOR SHALL COORDINATE SERVICE INSTALLATIONS WITH HOMEWONERS AND NOTIFY HOMEOWNERS IN THE EVENT SERVICE LINES TO THE BUILDINGS ARE GALVANIZED.

WATER SERVICE CONNECTION DETAIL
SCALE: N.T.S

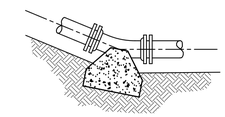

PLAN VIEW

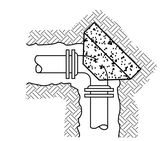

PLAN VIEW

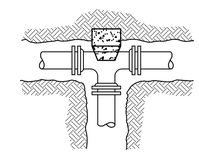

PLAN VIEW

SQUARE FEET OF CONCRETE THRUST BLOCKING ON UNDISTURBED SOIL

UP TO 150 P.S.I. WORKING PRESSURE					
PIPE SIZE	TEE OR TAP SLEEVE	90° BEND	45° BEND	22 1/2° BEND	11 1/4° BEND
* 4"	2.0	1.0	1.3	0.7	0.5
6"	2.0	2.0	1.5	0.8	0.6
8"	3.6	3.8	2.0	1.0	0.7
10"	5.6	5.6	3.3	1.5	1.0
12"	8.0	8.0	4.3	2.3	1.5

* - FOR 3" AND SMALLER PIPES

NOTES:
1. POUR THRUST BLOCKS AGAINST UNDISTURBED MATERIAL.
2. JOINTS SHALL NOT BE COVERED WITH CONCRETE
3. THRUST BLOCK SHALL EXTEND FULL LENGTH OF FITTING
4. PLACE MARINE GRADE PLYWOOD BOARD IN FRONT OF ALL PLUGS AND CAPS BEFORE POURING CONCRETE.
5. WHERE M.J. PIPE IS USED, M.J. PLUG WITH RETAINER GLAND MAY BE SUBSTITUTED FOR END BLOCKS WITH APPROVAL FROM ENGINEER.

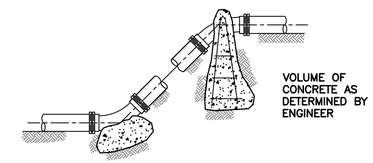

ELEVATION VIEW

THRUST BLOCKS
SCALE: N.T.S

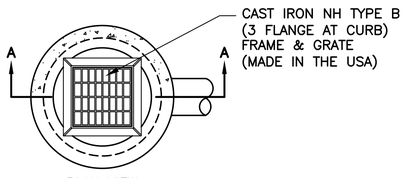

PLAN VIEW

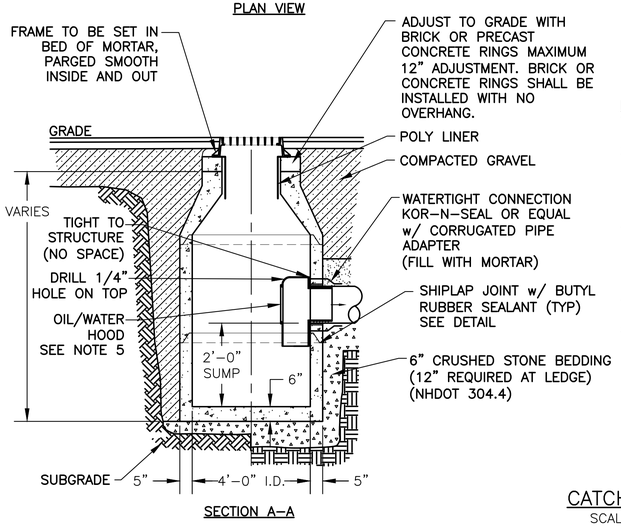

SECTION A-A

NOTES:
1. CONCRETE SHALL BE 4,000 P.S.I. AFTER 28 DAYS.
2. CIRCUMFERENTIAL REINFORCEMENT SHALL BE 0.12 SQ. IN. PER LINEAR FT. IN ALL SECTIONS & SHALL BE PLACED IN THE CENTER THIRD OF WALL.
3. THE TONGUE OR THE GROOVE OF THE JOINT SHALL CONTAIN ONE LINE OF CIRCUMFERENTIAL REINFORCEMENT EQUAL TO 0.12 SQ. IN. PER LINEAR FT.
4. EACH CASTING TO HAVE LIFTING HOLES CAST IN.
5. ALL CATCHBASINS OUTLETS SHALL HAVE 'ELIMINATOR' OIL AND FLOATING DEBRIS TRAP BY KLEANSTREAM (NO EQUAL). FOR EXIT ONLY CBs, NOT FOR PASS THROUGH CBs.

CATCH BASIN
SCALE: N.T.S

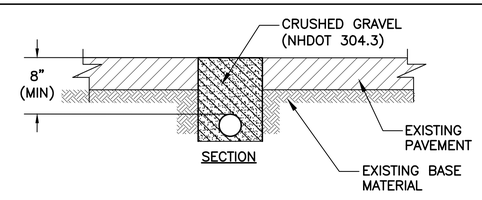

SECTION

NOTES:
1. CONTRACTOR SHALL PLACE TEMPORARY WATER IN TRENCH AT ALL ROADWAY AND DRIVEWAY CROSSINGS. COST OF TRENCH IS INCIDENTAL TO THE TEMPORARY WATER PAY ITEM.

TEMPORARY WATER PIPE TRENCH
SCALE: N.T.S

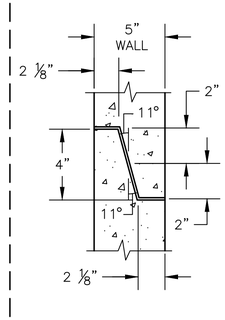

SHIPLAP DETAIL

NOTES:
1. CONCRETE SHALL BE 4,000 P.S.I. AFTER 28 DAYS.
2. CIRCUMFERENTIAL REINFORCEMENT SHALL BE 0.12 SQ. IN. PER LINEAR FT. IN ALL SECTIONS AND SHALL BE PLACED IN THE CENTER THIRD OF THE WALL.
3. THE TONGUE OR THE GROOVE OF THE JOINT SHALL CONTAIN ONE LINE OF CIRCUMFERENTIAL REINFORCEMENT EQUAL TO 0.12 SQ. IN. PER LINEAR FT..
4. EACH CASTING TO HAVE LIFTING HOLES CAST IN.
5. LADDER RUNGS SHALL BE OMITTED.

DRAIN MANHOLE
SCALE: N.T.S

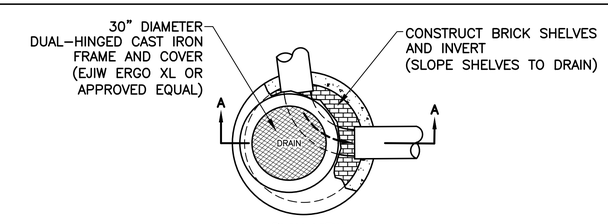

PLAN VIEW

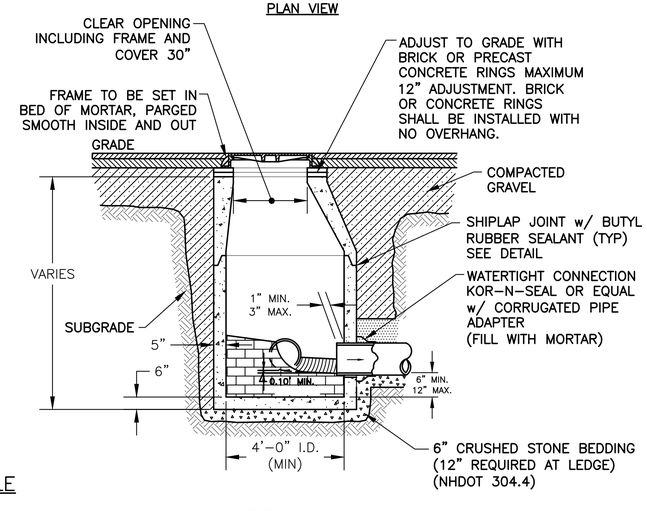

SECTION A-A

NO.	DESCRIPTION	APP'D	DATE
0	ISSUED FOR BID	MRB	07/23/18

REVISIONS

STATE OF NEW HAMPSHIRE - MARC R. BATCHELDER - No. 12528 - PROFESSIONAL ENGINEER

DATE: MARCH 2, 2018
SCALE: 1:20
PROJECT NO.: CoP-010

MARC R. BATCHELDER, PE
ENGINEER OF RECORD

FOR: McDonough Street Phase 4 Utility & Roadway Improvements Portsmouth, NH

Seaport Engineering, LLC
PORTSMOUTH, NH
(603) 498-8449
www.seaporteng.com

TITLE: DETAILS WATER & DRAINAGE

C-605

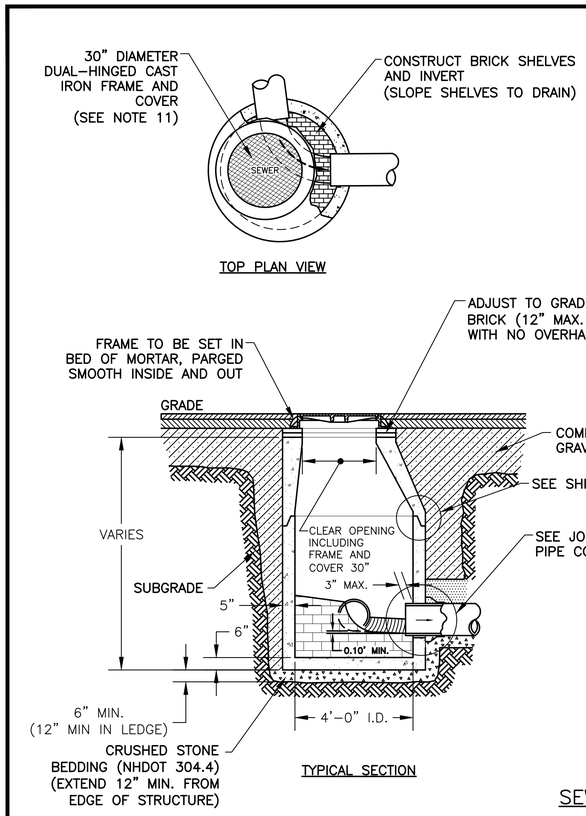

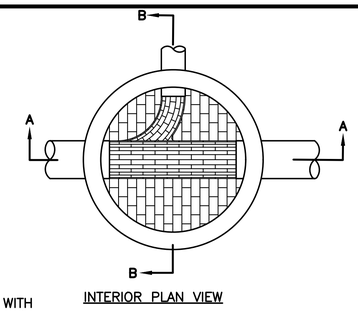

SEWER MANHOLE

SCALE: N.T.S

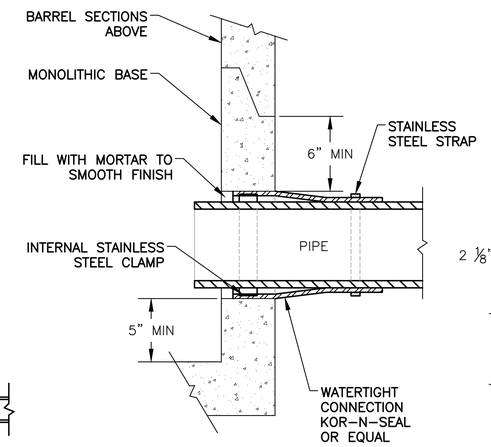

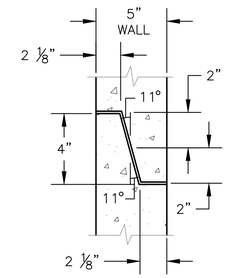

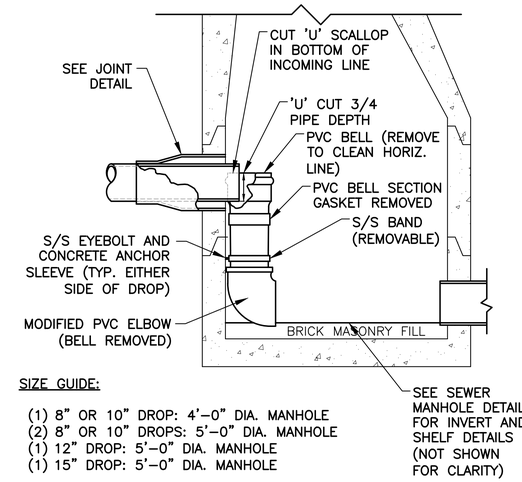

SIZE GUIDE:

(1) 8" OR 10" DROP: 4'-0" DIA. MANHOLE
(2) 8" OR 10" DROPS: 5'-0" DIA. MANHOLE
(1) 12" DROP: 5'-0" DIA. MANHOLE
(1) 15" DROP: 5'-0" DIA. MANHOLE

INSIDE DROP DETAIL

MANHOLE NOTES:

1. IT IS THE INTENTION THAT THE MANHOLE, INCLUDING ALL COMPONENT PARTS, HAVE ADEQUATE SPACE, STRENGTH, AND LEAKPROOF QUALITIES CONSIDERED NECESSARY BY THE NEW HAMPSHIRE DEPARTMENT OF ENVIRONMENTAL SERVICES (NHDES) FOR THE INTENDED SERVICE. SPACE REQUIREMENTS AND CONFIGURATIONS SHALL BE AS SHOWN ON THE DRAWING. MANHOLES MAY BE AN ASSEMBLY OF PRECAST SECTIONS, WITH STEEL REINFORCEMENT. IN ANY APPROVED MANHOLE, THE COMPLETE STRUCTURE SHALL BE OF SUCH MATERIAL AND QUALITY AS TO WITHSTAND LOADS OF 8 TONS (H-20 LOADING) WITHOUT FAILURE, AND TO PREVENT LEAKAGE IN EXCESS OF ONE GALLON PER DAY PER VERTICAL FOOT OF MANHOLE, CONTINUOUSLY FOR THE LIFE OF THE STRUCTURE. A PERIOD GENERALLY IN EXCESS OF 25 YEARS IS TO BE UNDERSTOOD IN BOTH CASES.
2. BARRELS AND CONE SECTIONS SHALL BE PRECAST REINFORCED CONCRETE (4,000psi AT 28-DAY).
3. CIRCUMFERENTIAL REINFORCEMENT SHALL BE 0.12 SQ. IN. PER LINEAR FT. IN ALL SECTIONS AND SHALL BE PLACED IN THE CENTER THIRD OF THE WALL.
4. THE TONGUE OR THE GROOVE OF THE JOINT SHALL CONTAIN ONE LINE OF CIRCUMFERENTIAL REINFORCEMENT EQUAL TO 0.12 SQ. IN. PER LINEAR FT.
5. BITUMINOUS WATERPROOF COATING SHALL BE APPLIED TO ENTIRE EXTERIOR OF MANHOLE.
6. HORIZONTAL JOINTS SHALL BE SEALED FOR WATER TIGHTNESS USING A DOUBLE ROW OF ELASTOMERIC (KENT SEAL OF EQUAL) OR MASTIC SEALANT.
7. EACH CASTING TO HAVE LIFTING HOLES CAST IN. LIFTING HOLES SHALL BE PATCHED PRIOR TO BACKFILL.
8. PRECAST CONCRETE BARREL SECTIONS, CONES, AND BASES SHALL CONFORM TO ASTM C478.
9. LEAKAGE TEST SHALL BE PERFORMED IN ACCORDANCE WITH THE SPECIFICATIONS. INVERT AND SHELF TO BE PLACED AFTER LEAKAGE TEST.
10. INVERTS AND SHELVES: MANHOLES SHALL HAVE A BRICK PAVED SHELF AND INVERT, CONSTRUCTED TO CONFORM TO THE SIZE OF PIPE AND FLOW. CARE SHALL BE TAKEN TO INSURE THAT THE BRICK INVERT IS A SMOOTH CONTINUATION OF THE SEWER INVERT. INVERT BRICKS SHALL BE LAID ON EDGE. AT CHANGES IN DIRECTION, THE INVERTS SHALL BE LAID OUT IN CURVES OF THE LONGEST POSSIBLE TANGENT TO THE CENTER LINE OF THE SEWER PIPES. SHELVES SHALL BE CONSTRUCTED TO AN ELEVATION OF 1" ABOVE THE HIGHEST PIPE CROWN AND SLOPE TO DRAIN TOWARD THE FLOWING THROUGH CHANNEL. UNDERLAYMENT OF INVERT AND SHELF SHALL CONSIST OF BRICK MASONRY.
11. FRAMES AND COVERS: MANHOLE FRAMES AND COVERS SHALL BE PURCHASED THROUGH THE CITY OF PORTSMOUTH PUBLIC WORKS.
12. BEDDING: SCREENED GRAVEL AND/OR CRUSHED STONE FREE FROM CLAY, LOAM, ORGANIC MATTER AND MEETING ASTM C33. STONE SIZE NO. 67.
    100% PASSING 1 INCH SCREEN
    0-10% PASSING #4 SIEVE
    90-100% PASSING 3/4 INCH SCREEN
    0- 5% PASSING #8 SIEVE
    20- 55% PASSING 3/8 INCH SCREEN
    WHERE ORDERED BY THE ENGINEER TO STABILIZE THE BASE, SCREENED GRAVEL OR CRUSHED STONE 1-1/2 INCH TO 1/2 INCH SHALL BE USED.
13. SHALLOW MANHOLE: IN LIEU OF A CONE SECTION, WHENMANHOLE IS LESS THAN 6 FEET, A REINFORCED CONCRETE SLAB COVER HAVING AN ECCENTRIC ENTRANCE AND CAPABLE OF SUPPORTING H-20 LOADS MAY BE USED.
14. FLEXIBLE JOINT: A FLEXIBLE JOINT SHALL BE PROVIDED WITHIN THE FOLLOWING DISTANCES:
    RCP AND CI PIPE - ALL SIZES - 48"
    AC AND VC PIPE - UP THROUGH 12" DIA. - 18"
    AC AND VC PIPE - LARGER THAN 12" DIA. - 36"
    DI PIPE - NONE REQUIRED
    PVC (ASTM 3034) - UP THROUGH 15" DIA. - NONE REQUIRED
    PVC (ASTM F679) - LARGER THAN 15" DIA. - 48"/60"
    PVC (ASTM F789) - ALL SIZES - 48"/60"
    ABS (ASTM D2680) - ALL SIZES - SAME AS VC ABOVE.
15. MANHOLE CASTINGS SHALL COMPLY WITH ASTM A48.
16. BRICK MASONRY SHALL COMPLY WITH ASTM C32.
17. MORTAR SHALL CONFORM WITH REQUIREMENTS SPECIFIED IN NH DES ENV-WQ 704.13(C).
18. SPECIFICATIONS: ADDITIONAL CONSTRUCTION SPECIFICATIONS ARE INCLUDED IN THE PROJECT MANUAL. THESE STANDARD MANHOLE DRAWINGS ARE NOT COMPLETE WITHOUT THESE SPECIFICATIONS.
19. CITY OF PORTSMOUTH - STEPS SHALL NOT BE PROVIDED.
20. CITY OF PORTSMOUTH - SMH COVERS SHALL HAVE THE CITY LOGO AND BE PURCHASED THROUGH THE CITY AT COST. COSTS ASSOCIATED WITH FRAME AND COVER IS CONSIDERED SUBSIDIARY TO THE MANHOLE PAY ITEM.
21. SHALL COMPLY WITH CITY OF PORTSMOUTH DEPARTMENT OF PUBLIC WORKS STANDARDS.
22. CONTRACTOR SHALL MAINTAIN ACCESS TO ALL SEWER STRUCTURES THROUGHOUT THE PROJECT. AT THE CITY REQUEST, THE CONTRACTOR SHALL PROVIDE ADEQUATE ACCESS TO ANY STRUCTURE WHERE THEIR WORK IMPEDES ACCESS. THIS MAY INCLUDE EXCAVATING FOR BURIED STRUCTURES.

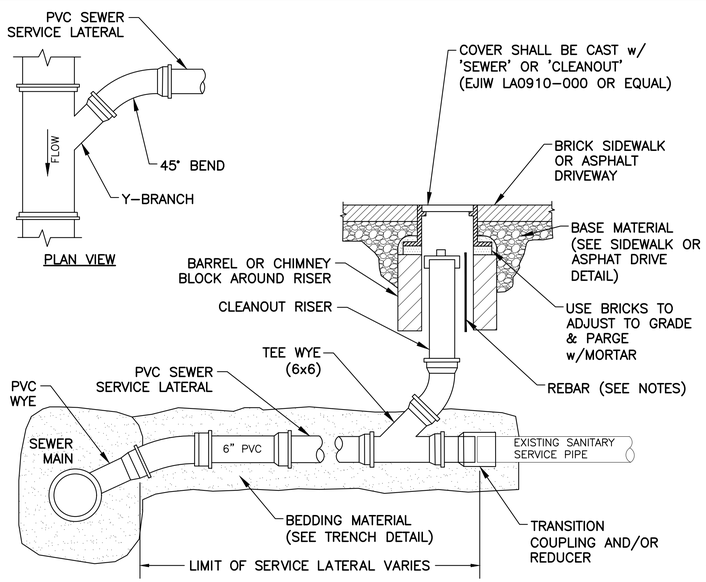

NOTES:

1. SEWER SERVICE LATERAL SHALL SLOPE AT A MINIMUM OF 1/4" PER FOOT.
2. WARNING TAPE SHALL BE PLACED 12" ABOVE SERVICE LATERAL.
3. #5 REBAR x 24"L TO BE USED WHEN CLEANOUT IS BURIED AND NO DI COVER USED.
4. COVER / BARREL BLOCK TRANSITION SHALL BE PARGED AND SEALED WITH MORTAR.
5. CLEANOUT TO BE USED TO PLUG & TEST ALL NEW LATERALS.
6. CLEANOUT RISER PIPE, FITTINGS, CAP, BLOCK AND CAST IRON COVER SHALL BE INCIDENTAL TO THE CONNECTION PAY ITEM.
7. EXISTING SEWER LATERALS AT AREAS WHERE NO NEW SEWER MAIN IS TO BE INSTALLED THAT IS DAMAGED DUE TO OTHER PIPE INSTALLATION SHALL BE REPAIRED AT NO ADDITIONAL COST.
8. PVC TO PVC REPAIRS SHALL BE DONE WITH PVC GASKETED REPAIR COUPLINGS.

SEWER SERVICE CONNECTION

SCALE: N.T.S

NO.	ISSUED FOR BID	APP'D	DATE
0		MRB	07/23/18

REVISIONS

STATE OF NEW HAMPSHIRE - MARC R. BATCHELDER - No. 12526 - LICENSED PROFESSIONAL ENGINEER

DATE: MARCH 2, 2018
SCALE: 1:20
PROJECT NO.: CoP-010

MARC R. BATCHELDER, PE
ENGINEER OF RECORD

FOR: McDonough Street Phase 4 Utility & Roadway Improvements Portsmouth, NH

Seaport Engineering, LLC
PORTSMOUTH, NH
(603) 498-8449
www.seaporteng.com

TITLE: DETAILS SEWER

C-606